ELEVATIONS AND SECTIONS EXISTING SITUATION 1:50

ELEVATION A

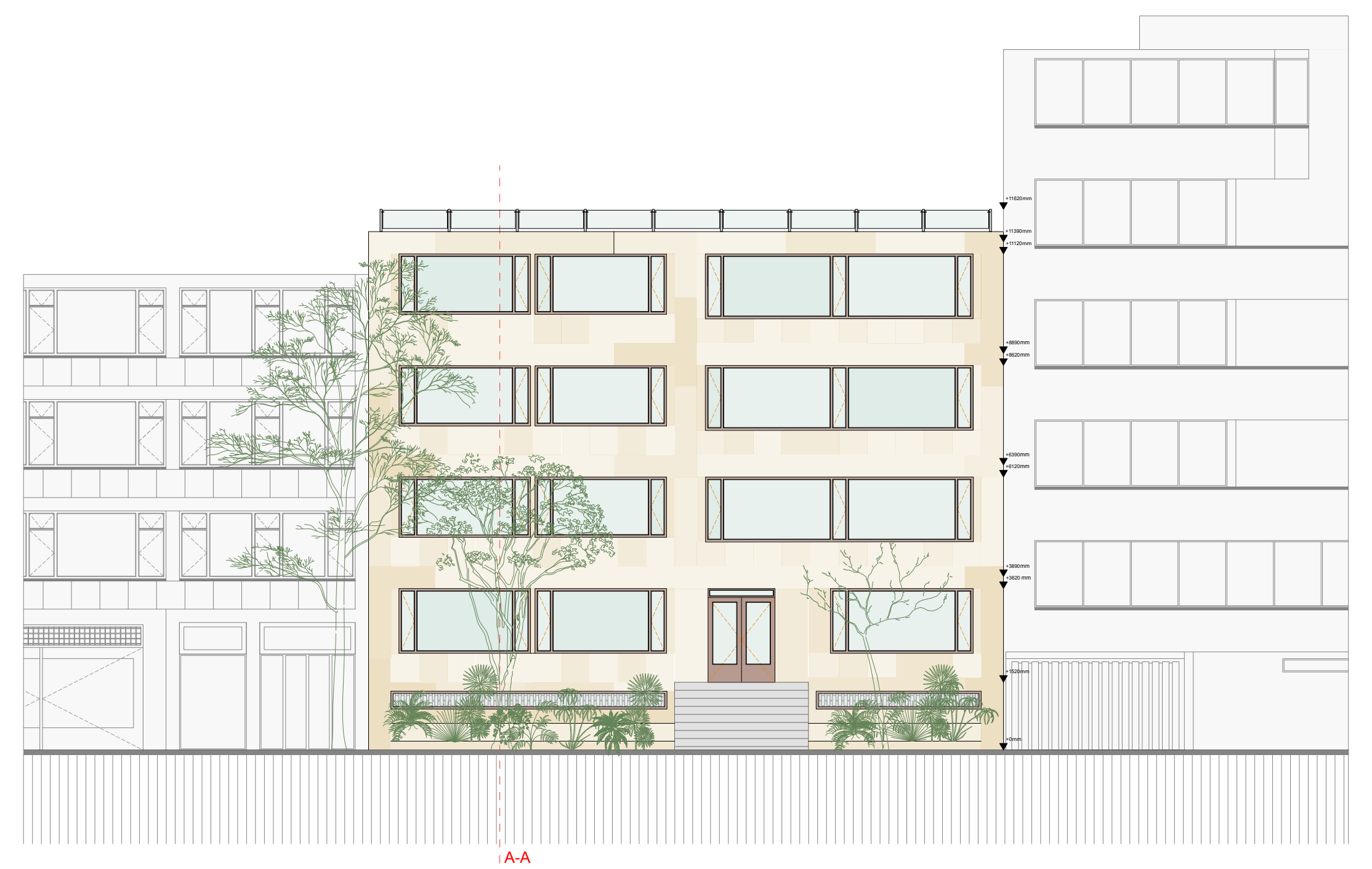

SECTION A-A

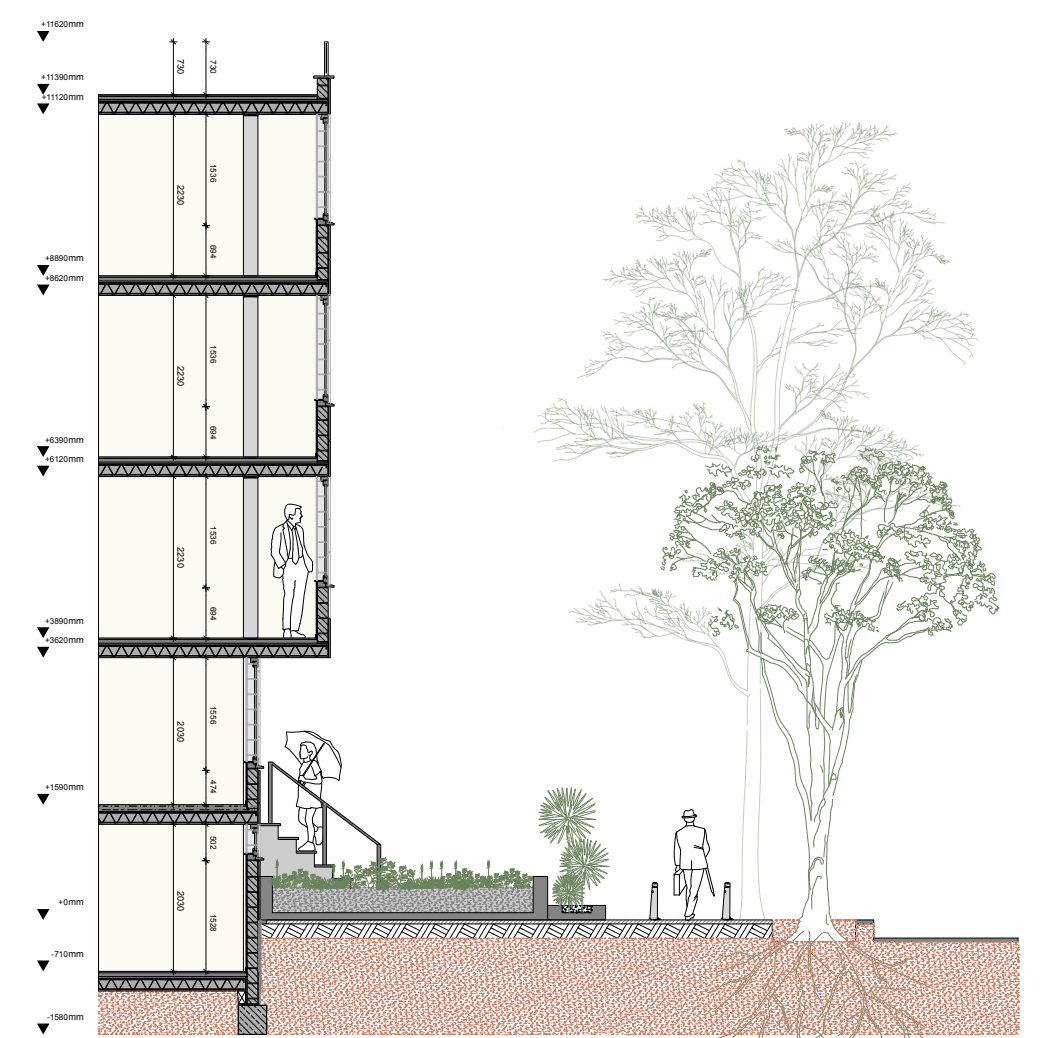

SECTION B-B

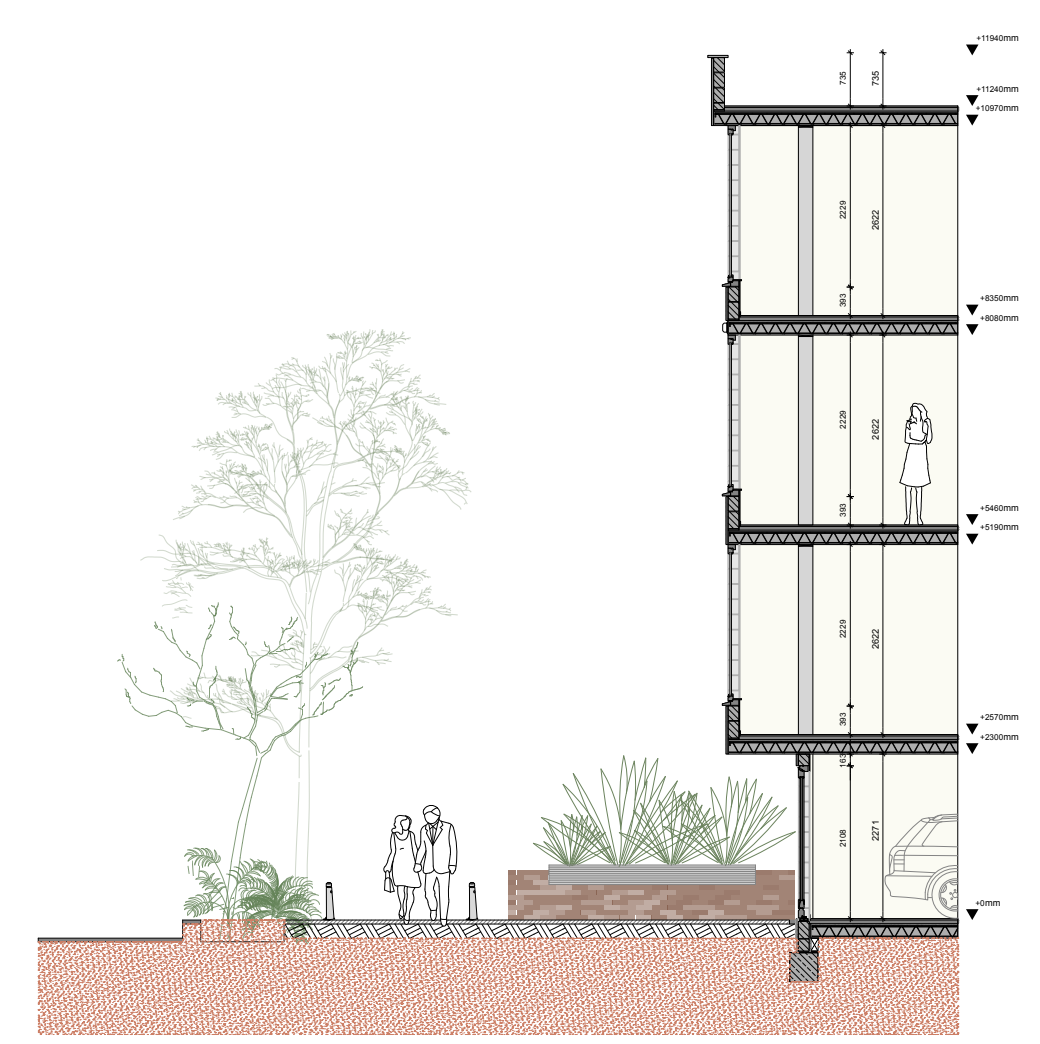

ELEVATION B

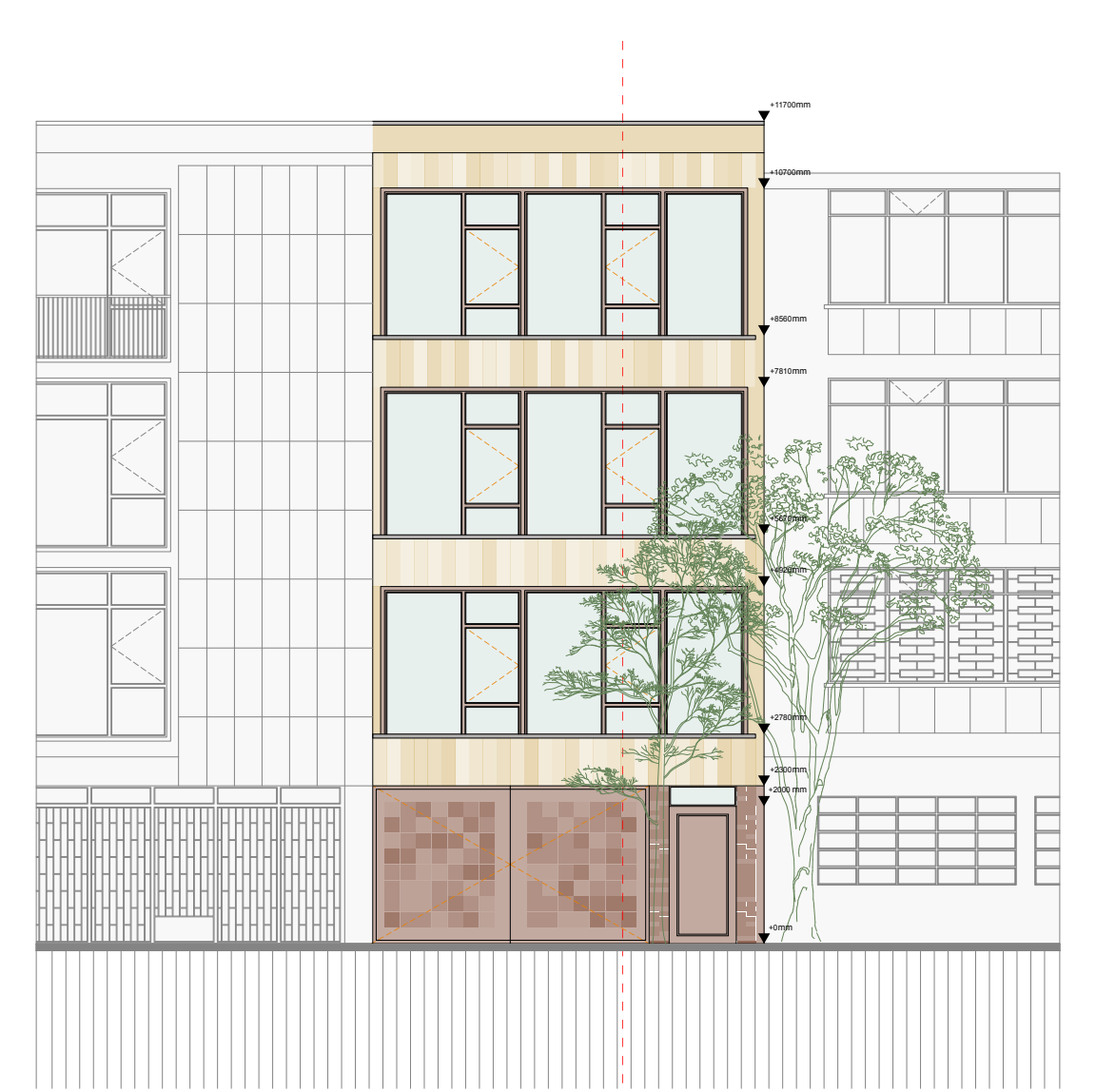

ELEVATIONS AND SECTIONS NEW SITUATION 1:50

ELEVATION A

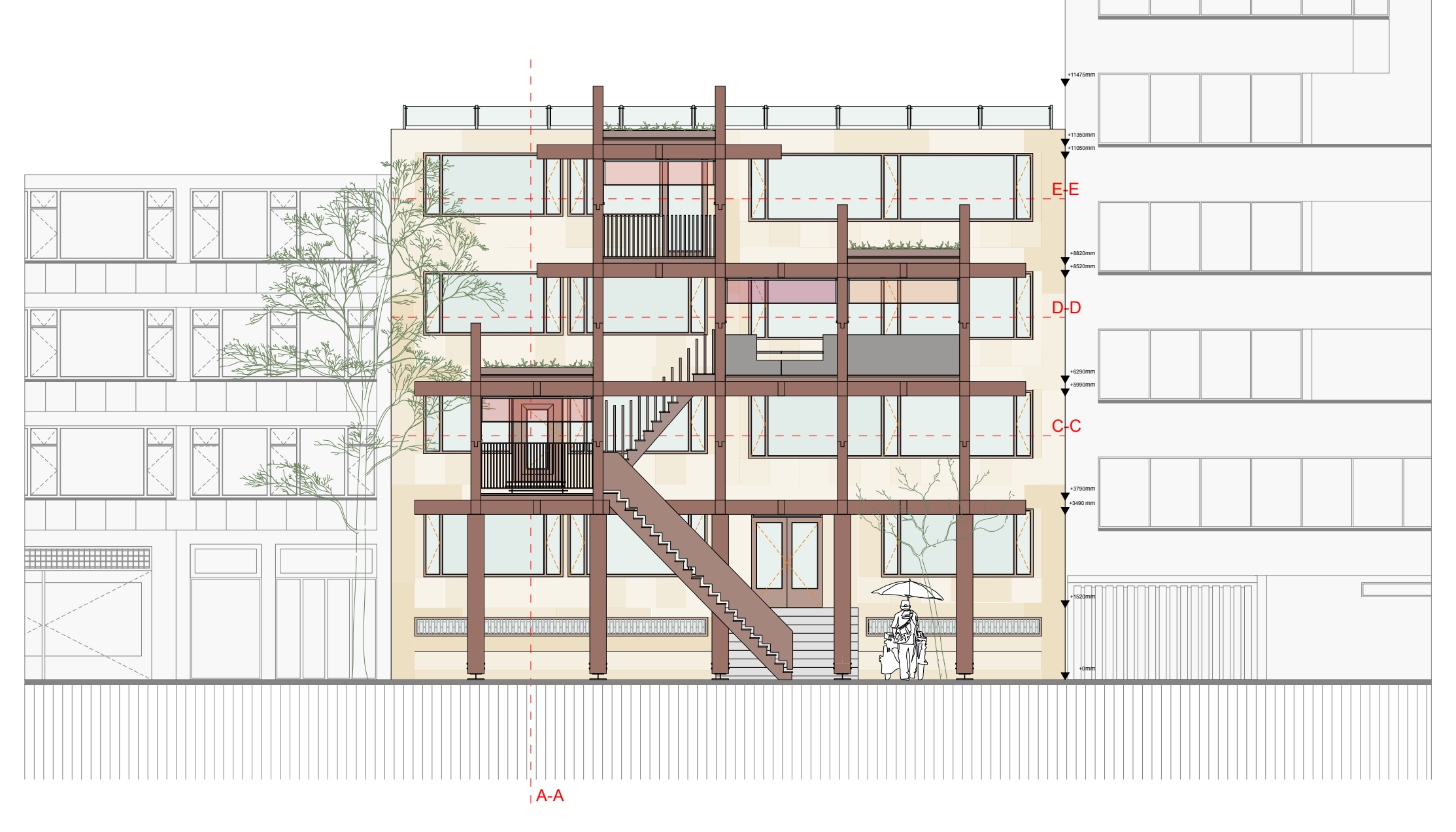
E-E
D-D
C-C
A-A
A-A

SECTION A-A

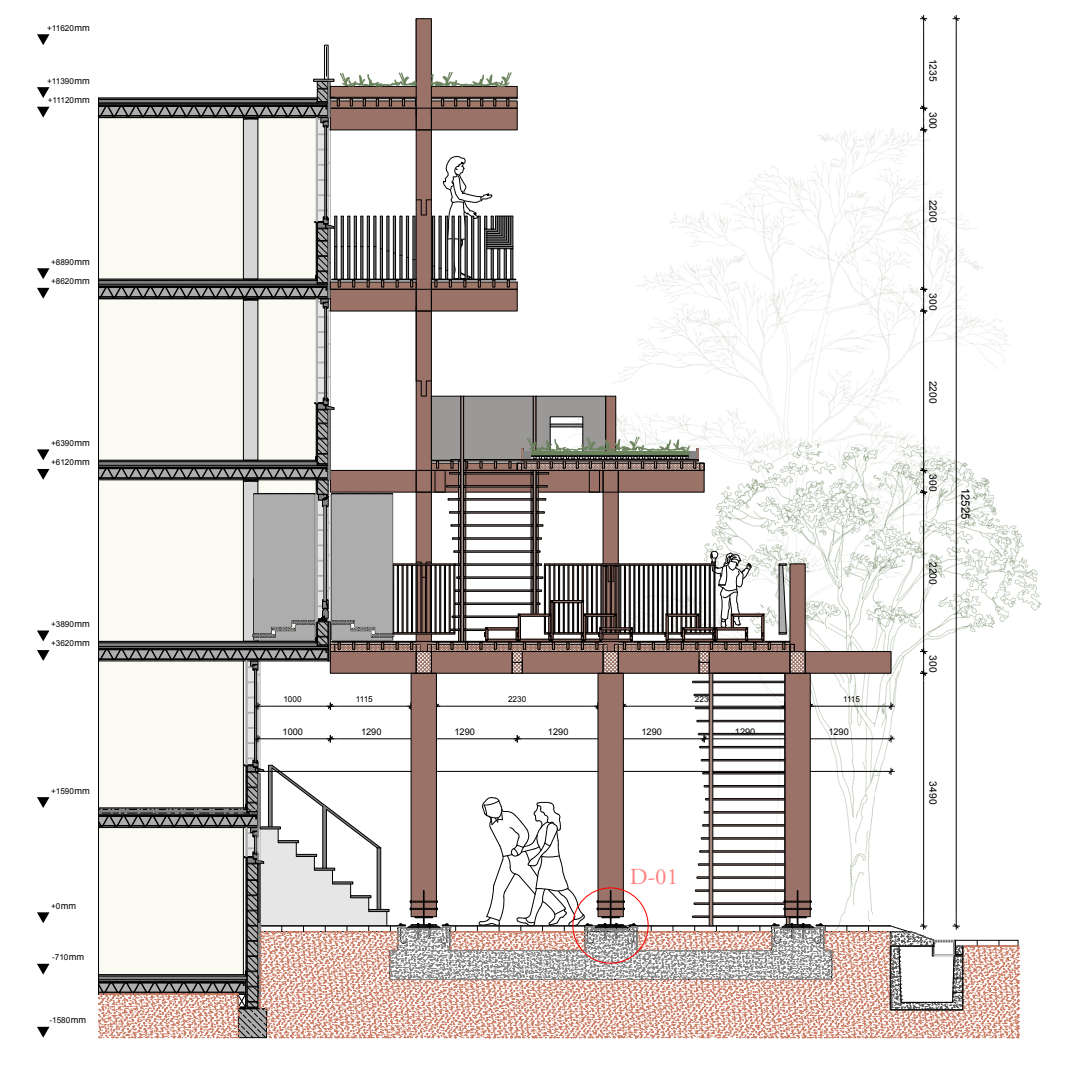

SECTION B-B

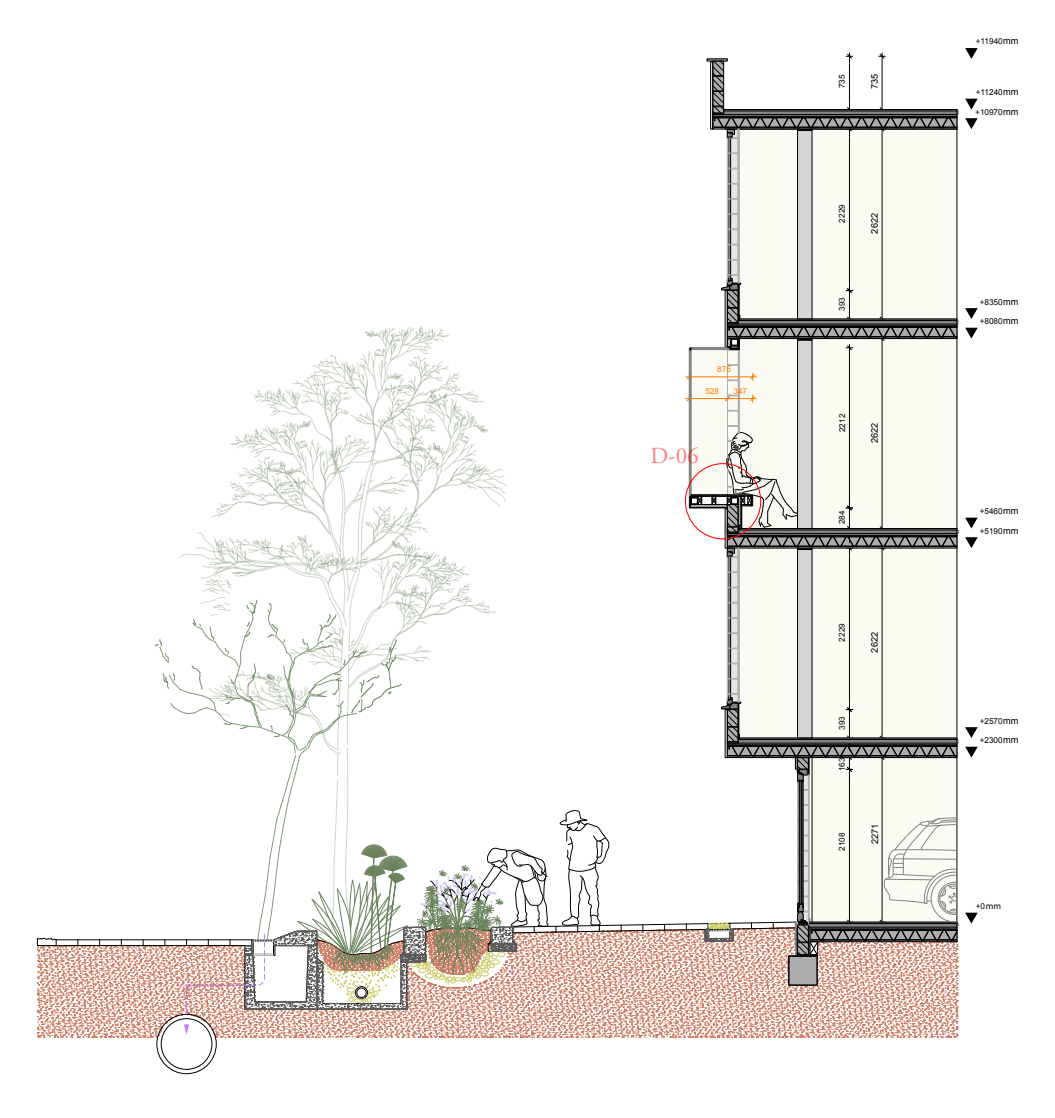

ELEVATION B

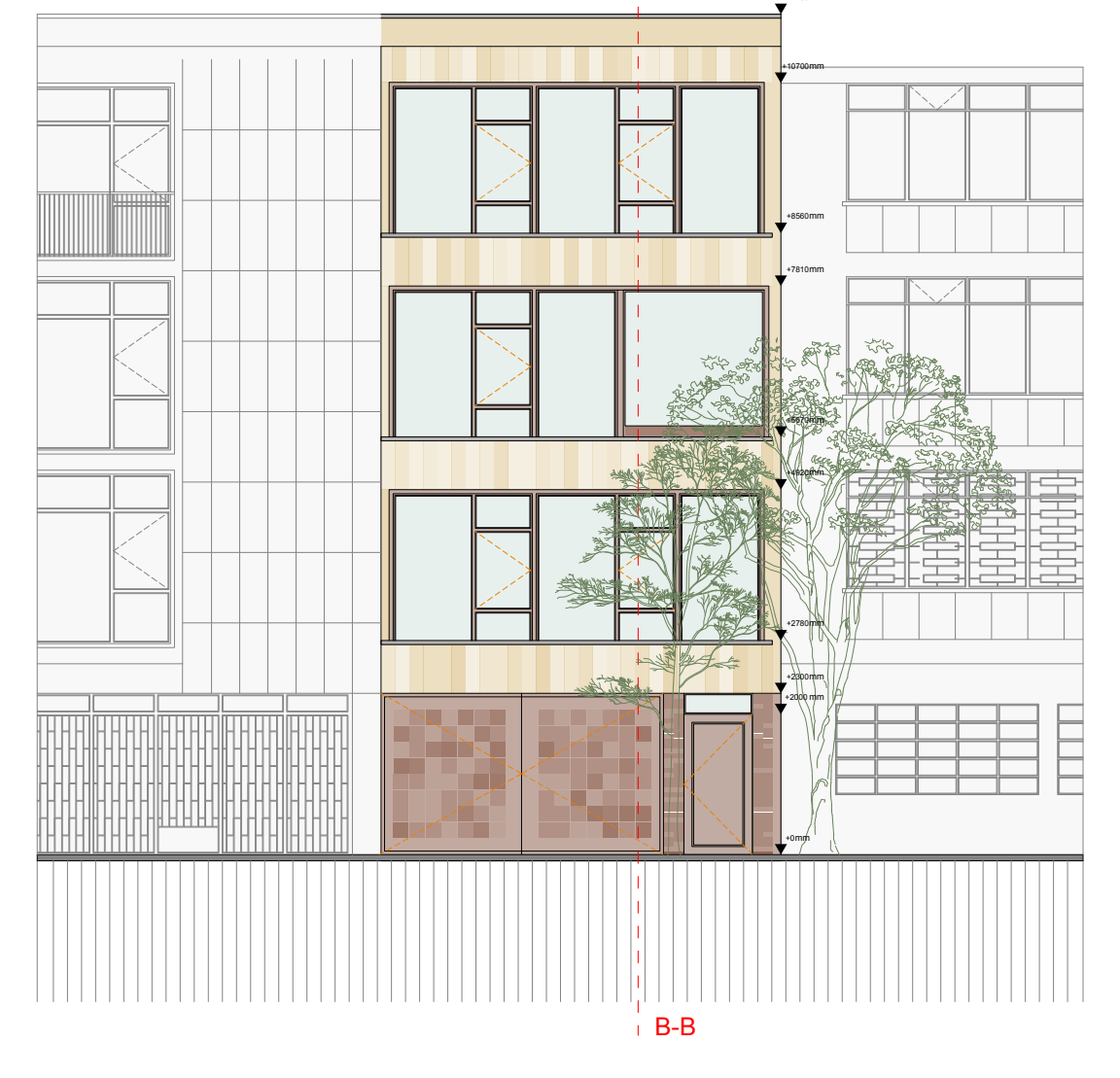

PLANS 1:50

FIRST FLOOR C-C

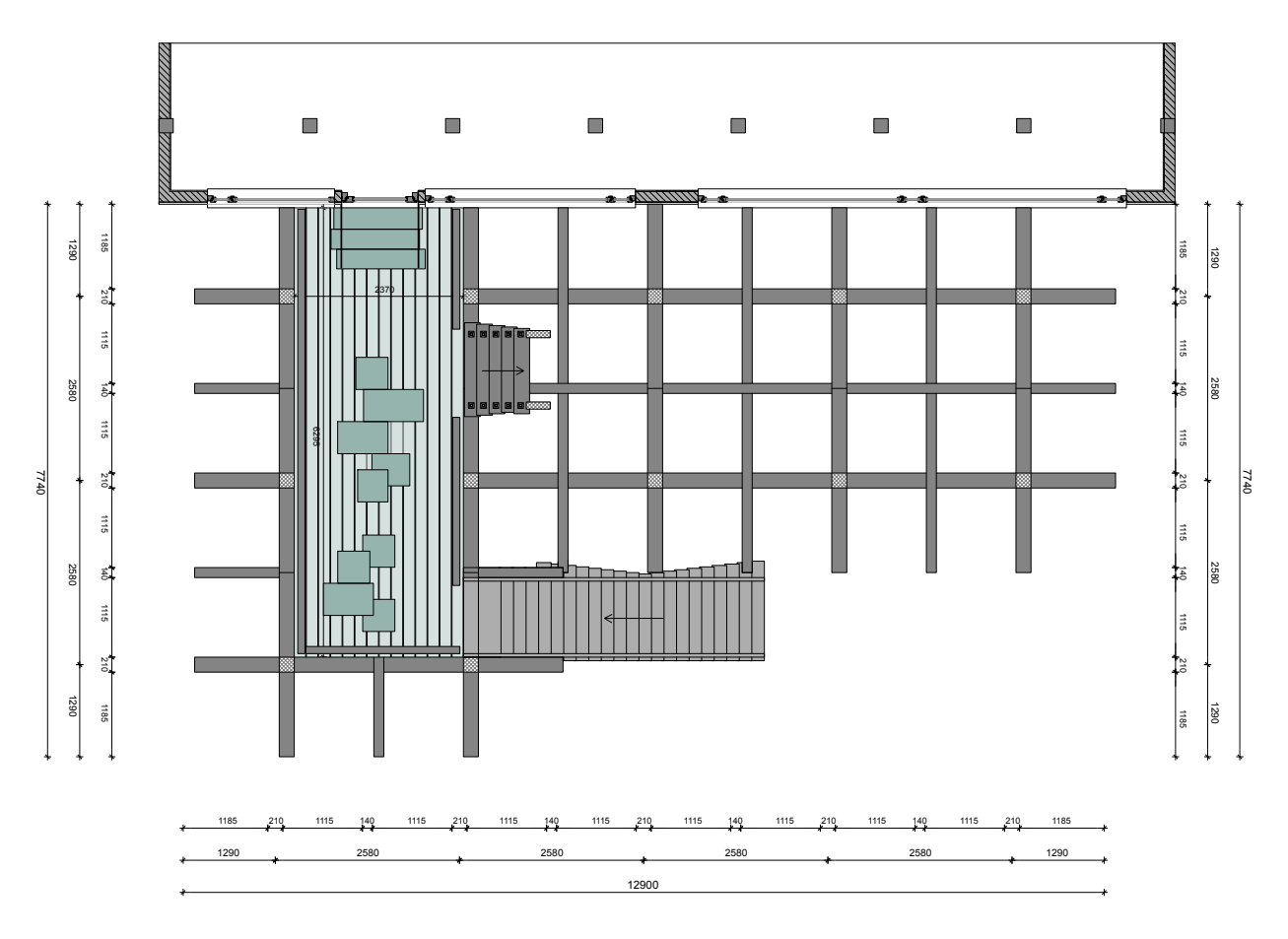

SECOND FLOOR D-D

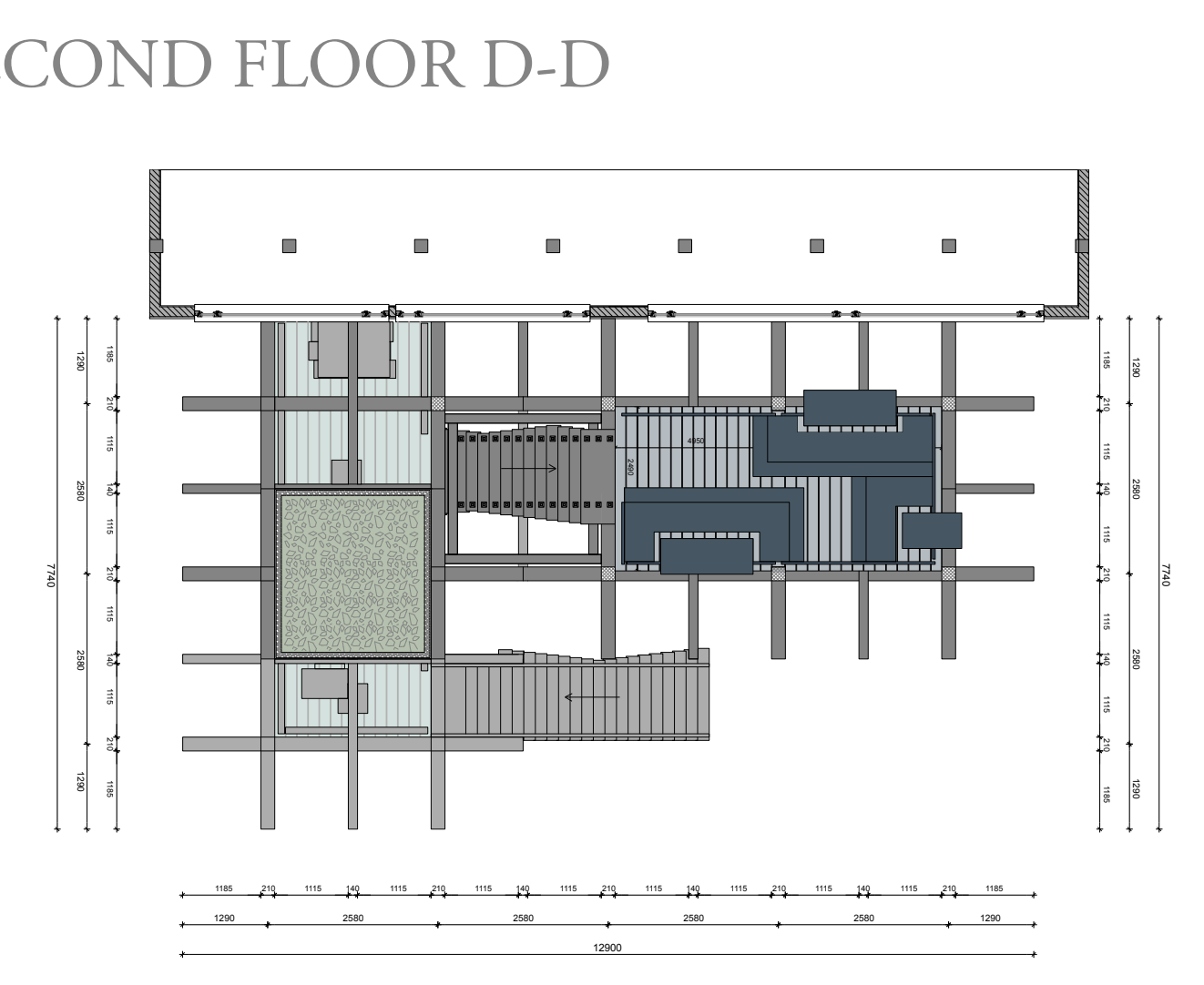

THIRD FLOOR E-E

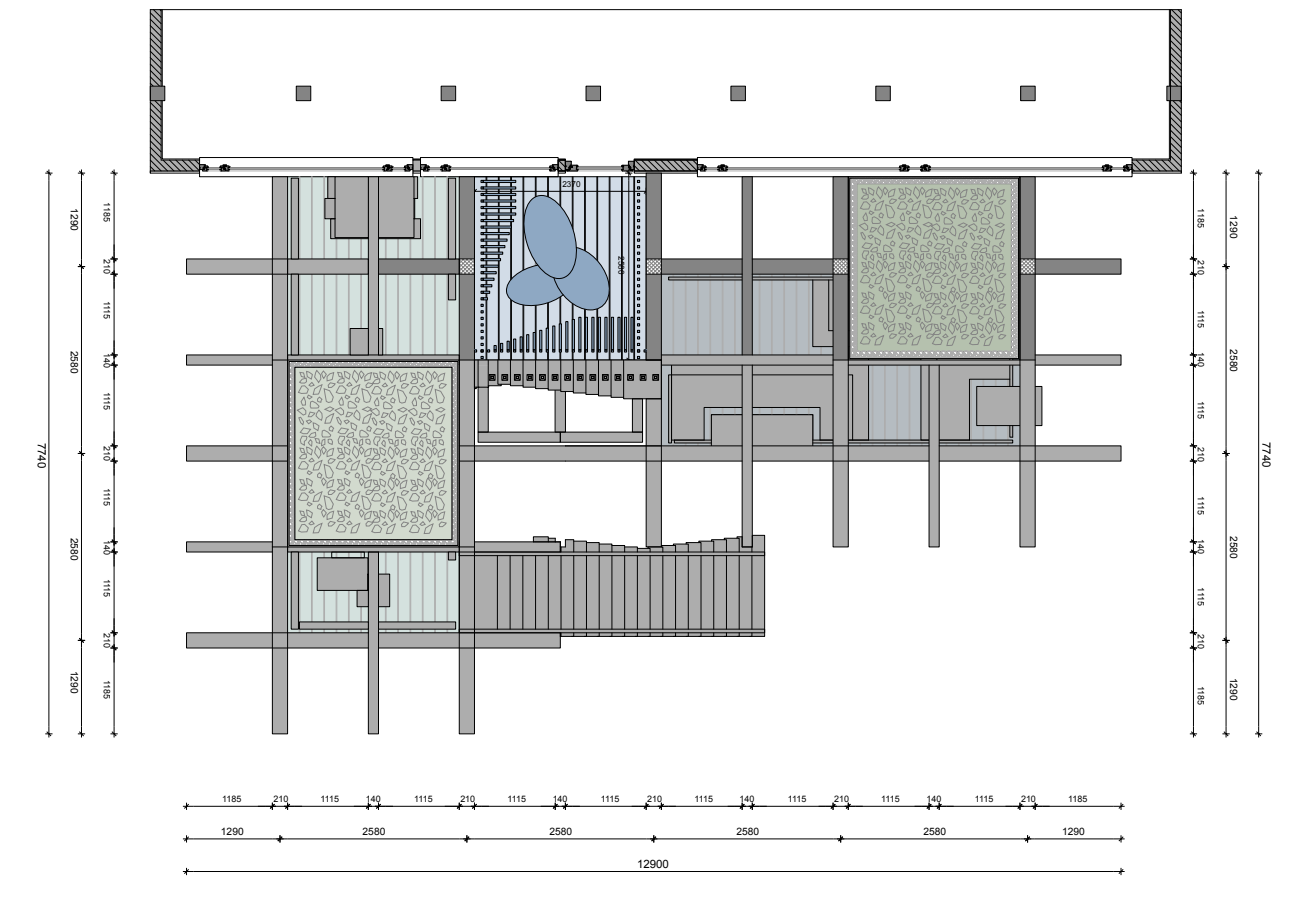

WOODEN JOINT DETAIL & BUILD UP MODULE

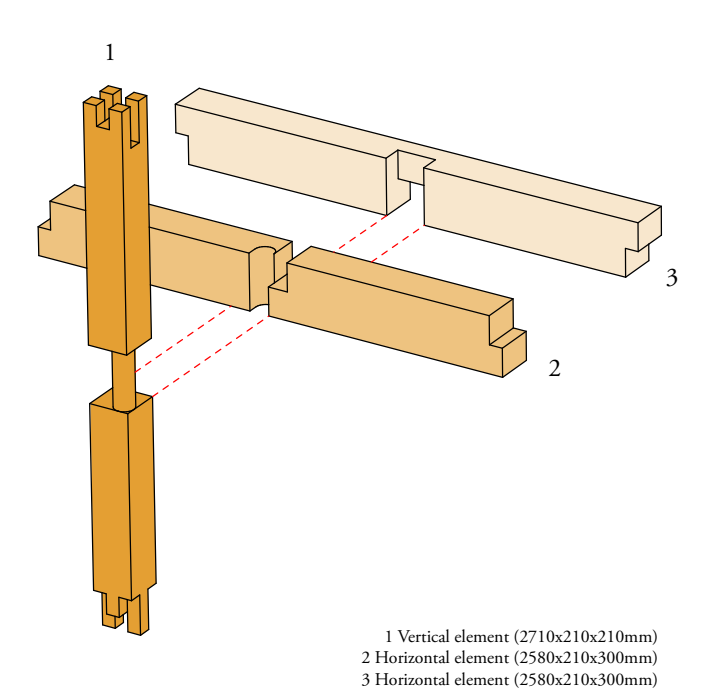

1 Vertical element (2710x210x210mm)
2 Horizontal element (2580x210x300mm)
3 Horizontal element (2580x210x300mm)

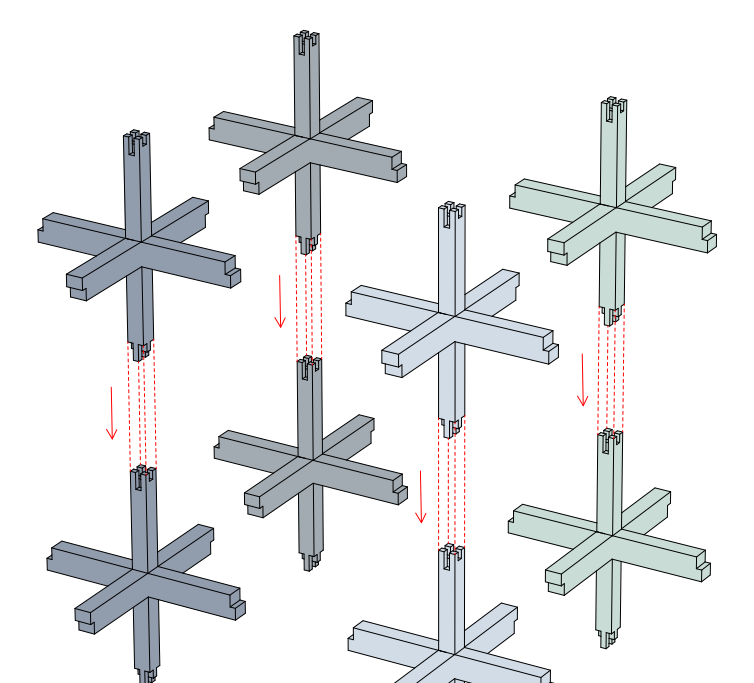

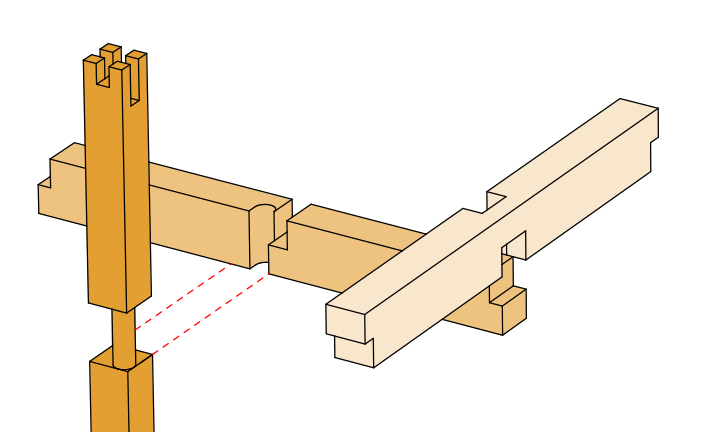

Horizontal element (3) is turned 90 degrees and placed onto the horizontal element (2). The part extracted from the element (210x150mm) makes it able to fit and glide down

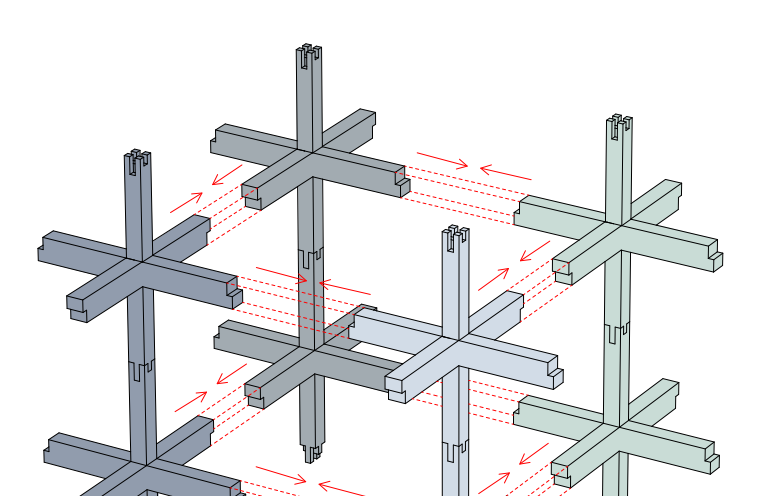

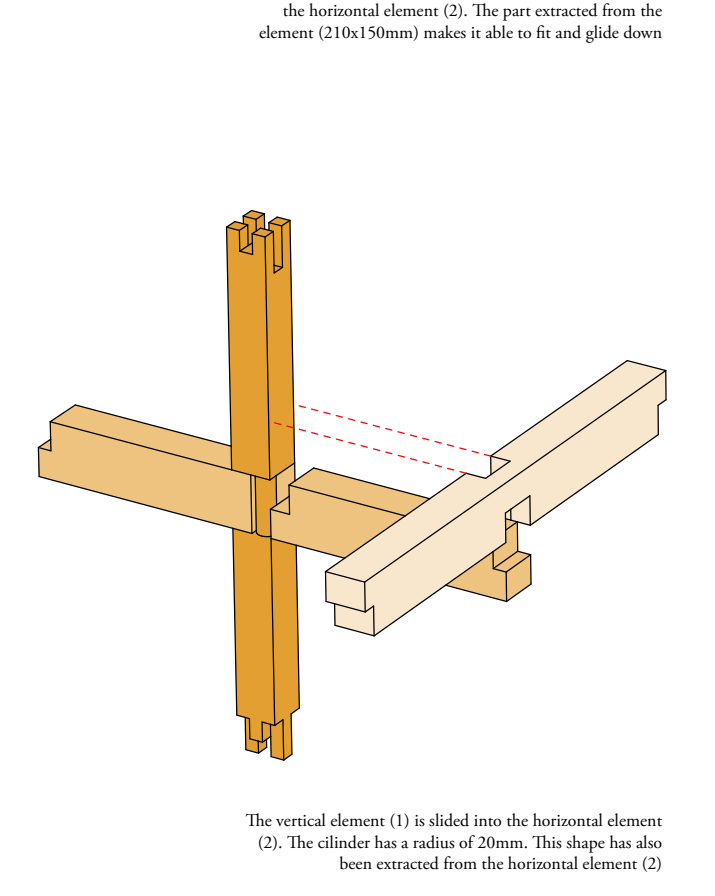

The vertical element (1) is slided into the horizontal element (2). The cilinder has a radius of 20mm. This shape has also been extracted from the horizontal element (2)

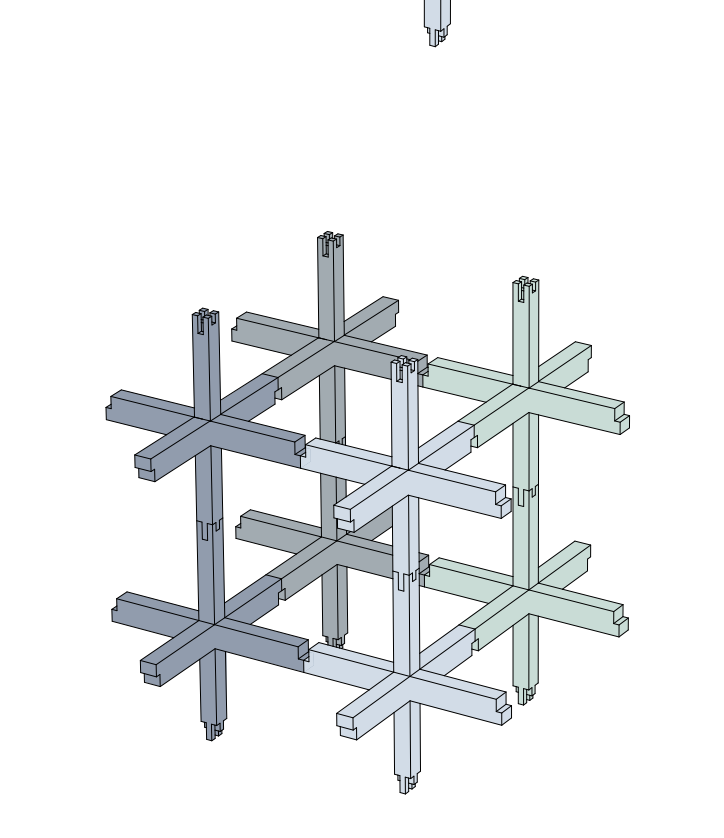

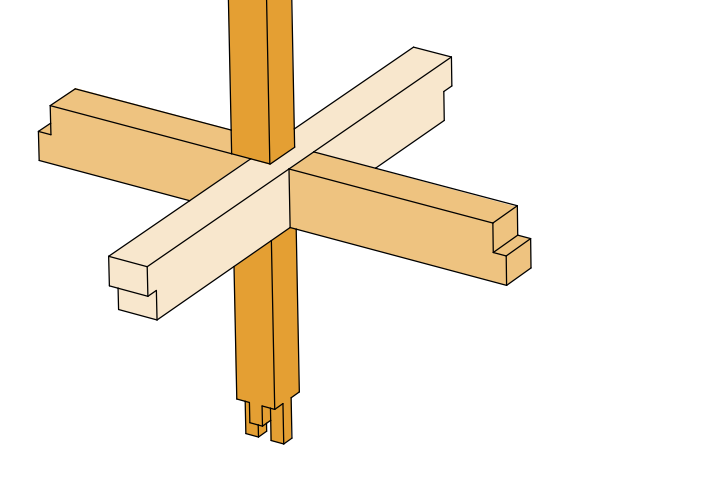

The vertical element (1) stays in place and the horizontal element (3) is slided towards it and placed down onto the horizontal element facing 90 degrees the other way.

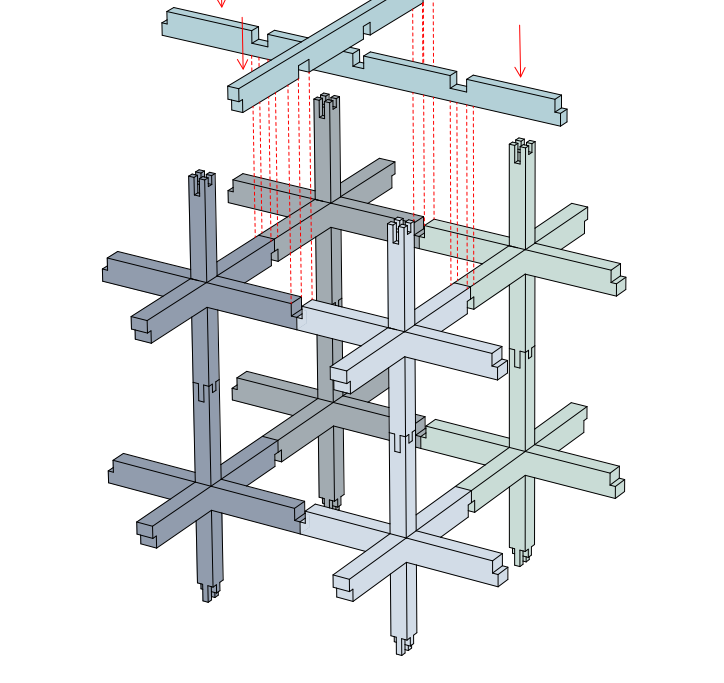

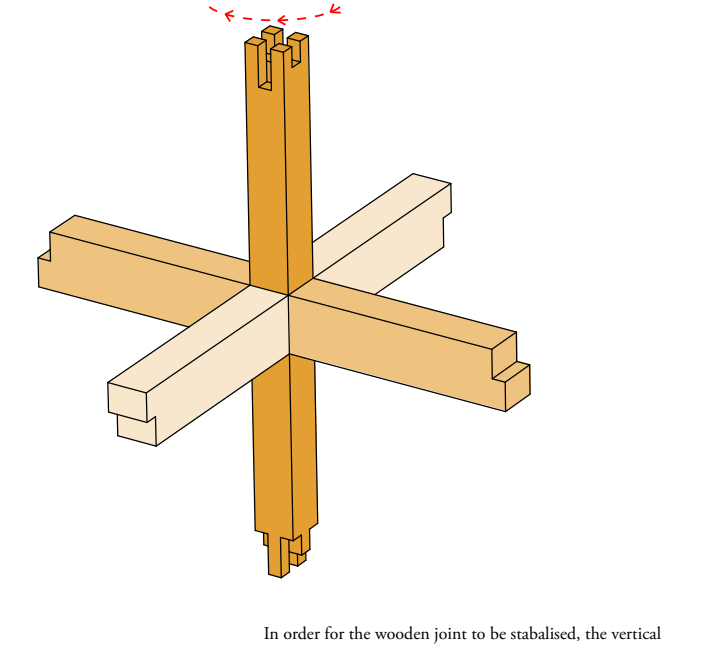

In order for the wooden joint to be stabalised, the vertical element (1) is turned 90 degrees around the axis of the cilinder, resulting in three elements interlocked.

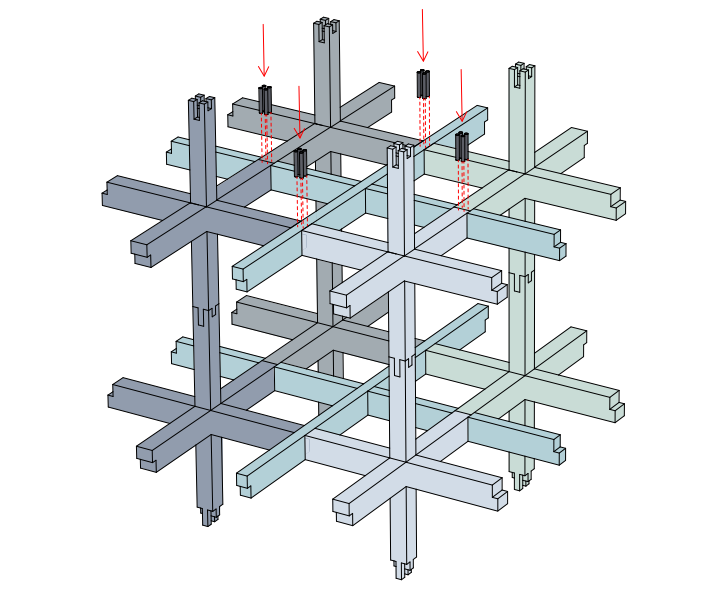

FACADE FRAGMENTS 1:20

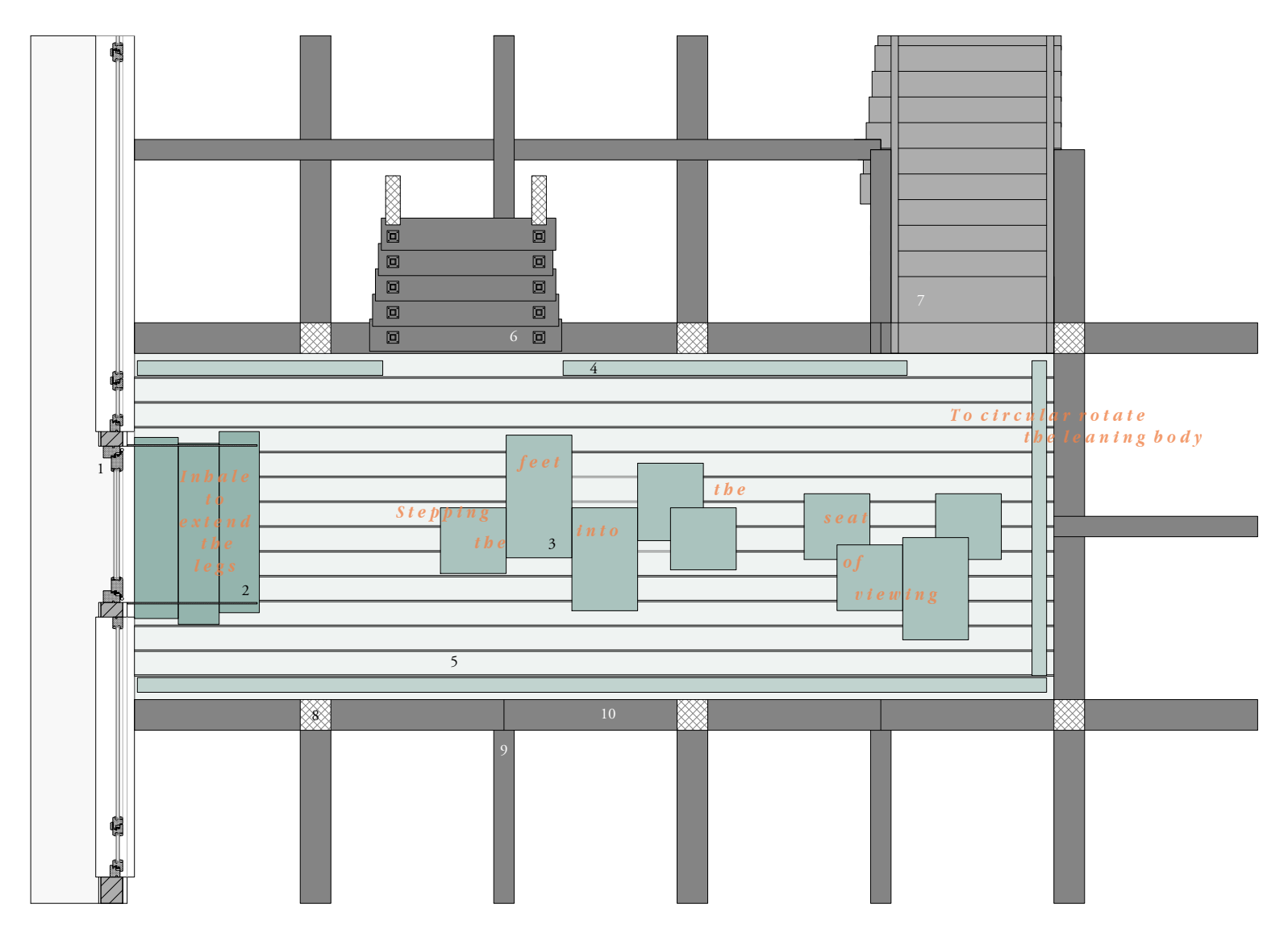

HORIZONTAL SECTION

1 - Wooden door 900mm width, 1750mm height
2 - Steel doorsteps 300mm depth, spacing between doorsteps 100mm
3 - Wooden seating boxes as stair elements, varying dimensions
4 - Angled wooden railing, varying lenghts, height 980mm
5 - Wooden outside floor boards, 630mm length, 160mm width, 210mm thick
6 - Wooden stairs going upwards
7 - Wooden stairs from the street
8 - Glulam vertical column 210x210mm
9 - Horizontal glulam beam for stability module 300x140mm
10 - Horizontal glulam beam 300x210mm

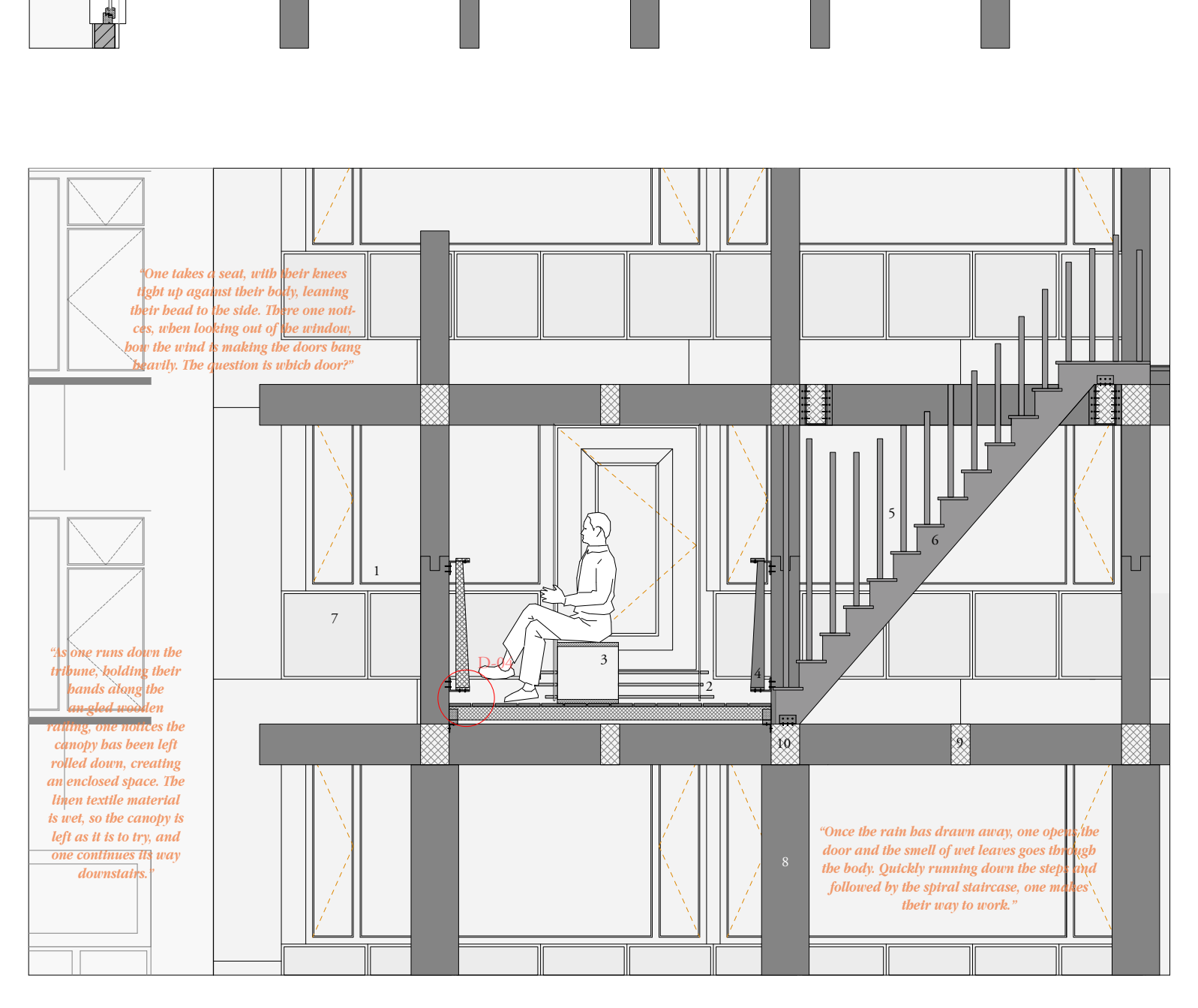

"One takes a seat, with their knees tight up against their body, leaning their head to the side. There one noti-ces, when looking out of the window, how the wind is making the doors hang heavily. The question is which door?"

"Some runs down the tribune, holding their hands along the angled wooden railing, one notices the canopy has been left rolled down, creating an enclosed space. The linen textile material is wet, so the canopy is left as it is to try, and one continues its way downstairs."

"Once the rain has drawn away, one opens the door and the smell of wet leaves goes through the body. Quickly running down the steps and followed by the spiral staircase, one makes their way to work."

VERTICAL SECTION

1 - Existing windows
2 - Steel doorsteps 20mm with varying lenghts on each side
3 - Wooden seating boxes as stair elements, varying dimensions
4 - Angled wooden railing, varying lenghts, height 980mm
5 - Wooden railing stickas 40x40mm with varying heights
6 - Wooden stairs going upwards
7 - Existing cladding panels
8 - Glulam vertical column 210x210mm
9 - Horizontal glulam beam for stability module 300x140mm
10 - Horizontal glulam beam 300x210mm

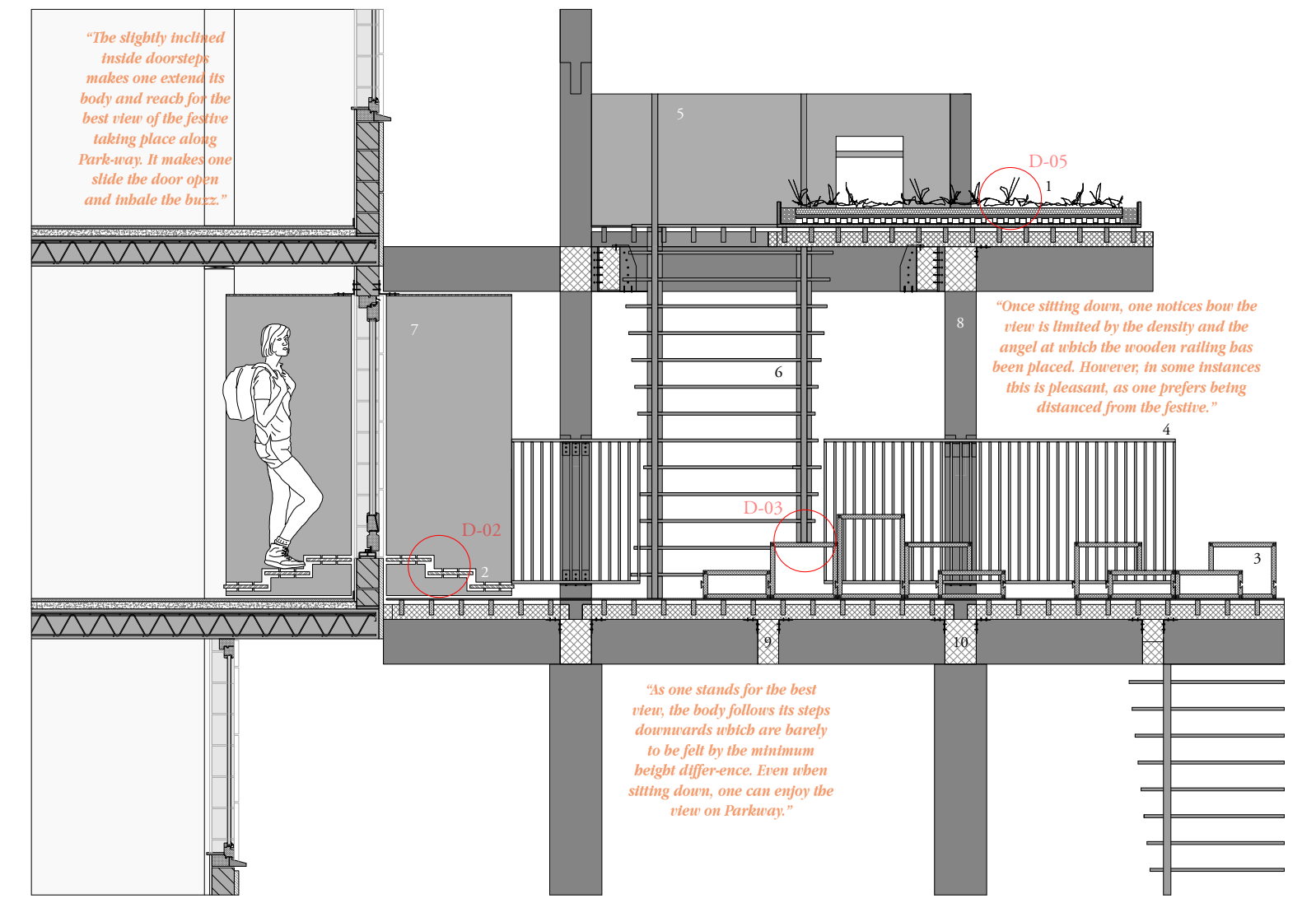

"The slightly inclined inside doorsteps makes one extend its body and reach for the best view of the festive taking place along Parkway. It makes one slide the door open and inhale the buzz."

"Once sitting down, one notices how the view is limited by the density and the angel at which the wooden railing has been placed. However, in some instances this is pleasant, as one prefers being distanced from the festive."

"As one stands for the best view, the body follows its steps downwards which are barely to be felt by the minimum height diff-erence. Even when sitting down, one can enjoy the view on Parkway."

VERTICAL SECTION

1 - Green roof
2 - Steel doorsteps 20mm with varying lenghts on each side
3 - Wooden seating boxes as stair elements, varying dimensions
4 - Angled wooden railing, varying lenghts, height 980mm
5 - Concrete and steel structured turning elements railing
6 - Wooden stairs going upwards
7 - Steel sheet box
8 - Glulam vertical column 210x210mm
9 - Horizontal glulam beam for stability module 300x140mm
10 - Horizontal glulam beam 300x210mm

DETAILS 1:5

01 THE COLUMN PLINTH

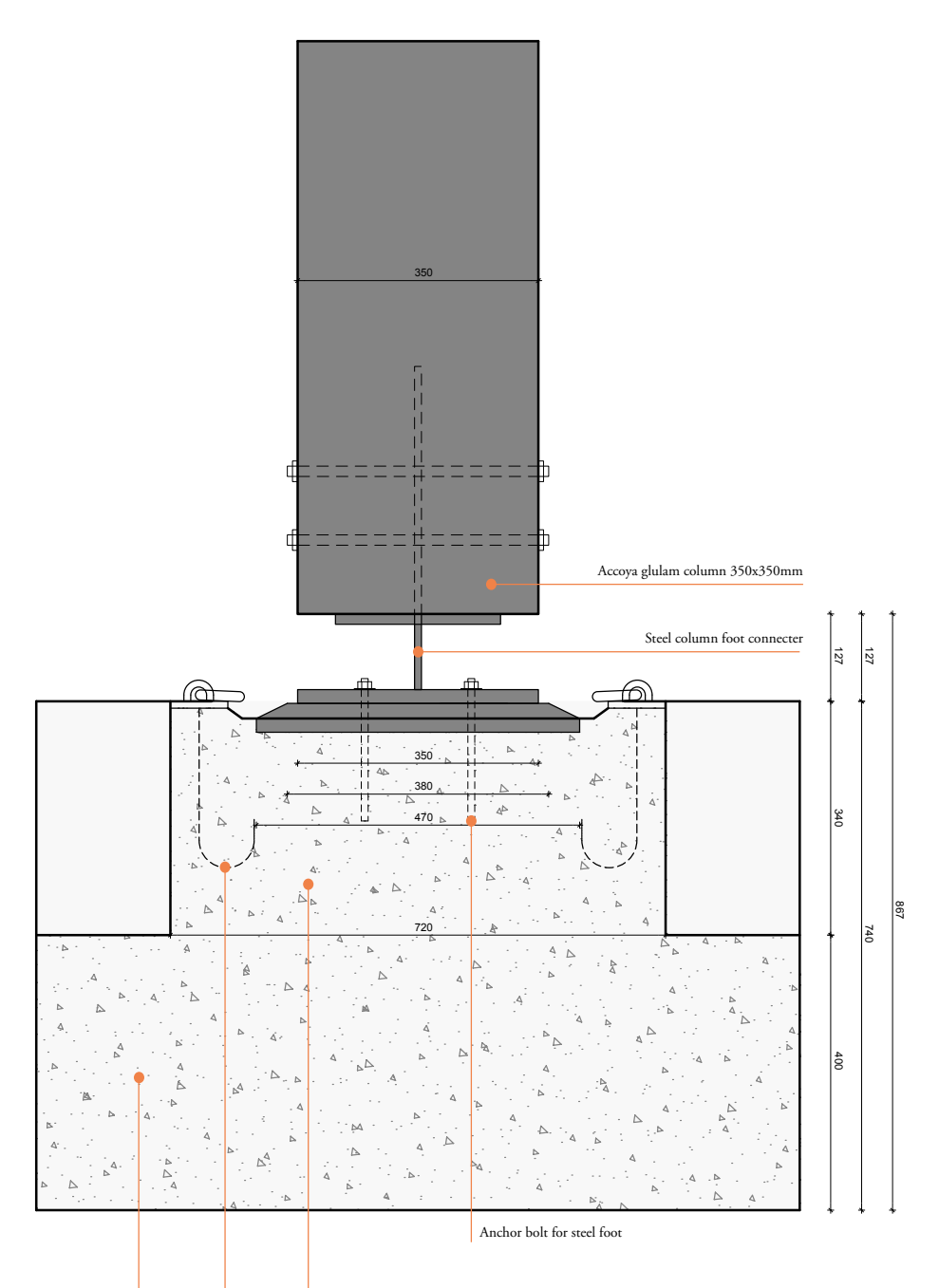
Accoya glulam column 350x350mm
Steel column foot connecter
Anchor bolt for steel foot
Concrete plinth
Steel connecter hooks and concrete
Concrete strip foundation 400mm

02 THE DOOR(STEPS)

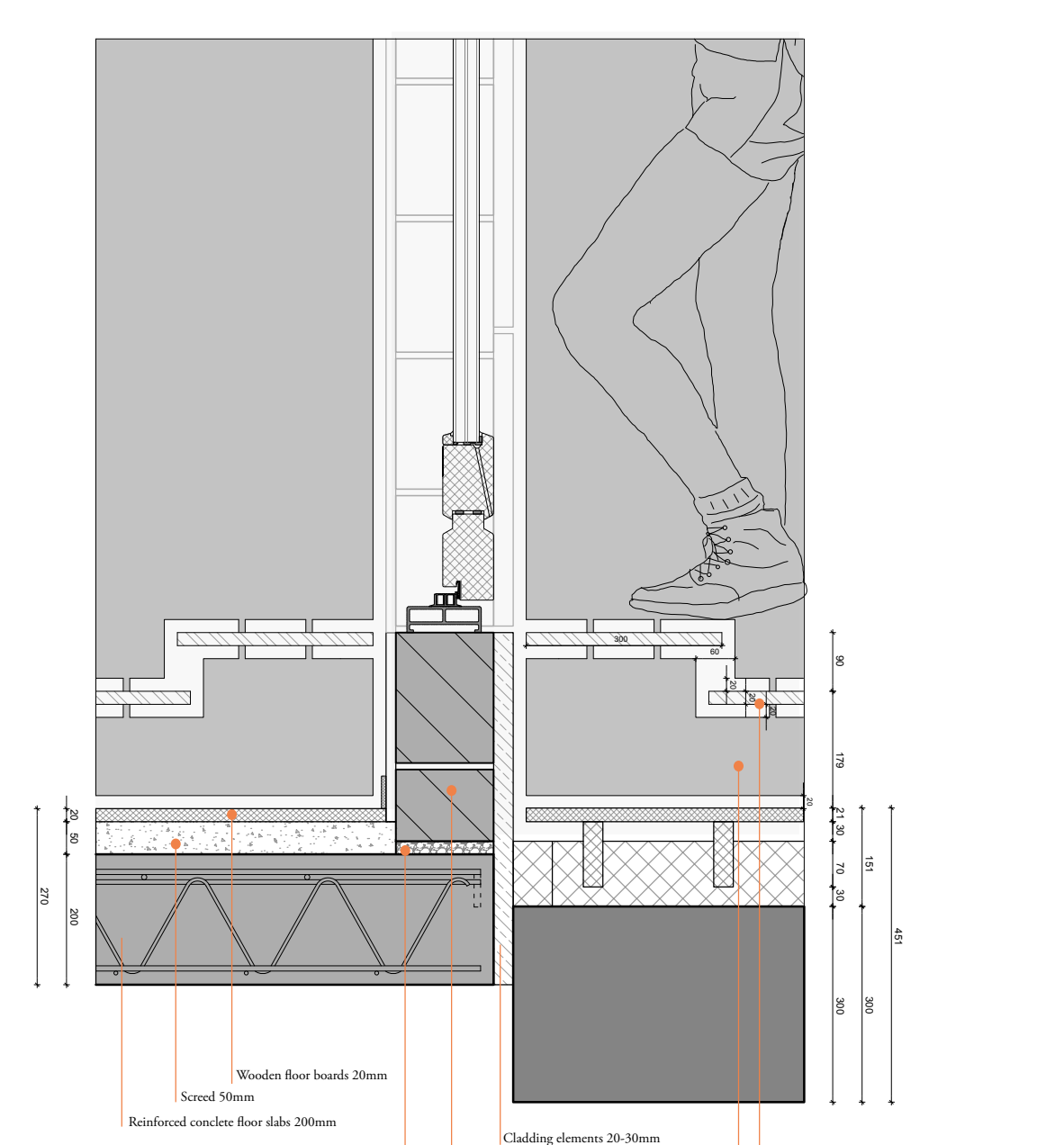
Wooden floor boards 20mm
Screed 50mm
Reinforced concrete floor slabs 200mm
Cladding elements 20-30mm
Concrete blocks 150x200mm
Mortar
Steel steps 20mm
Steel box 10mm

03 THE SEAT OF STAIRS

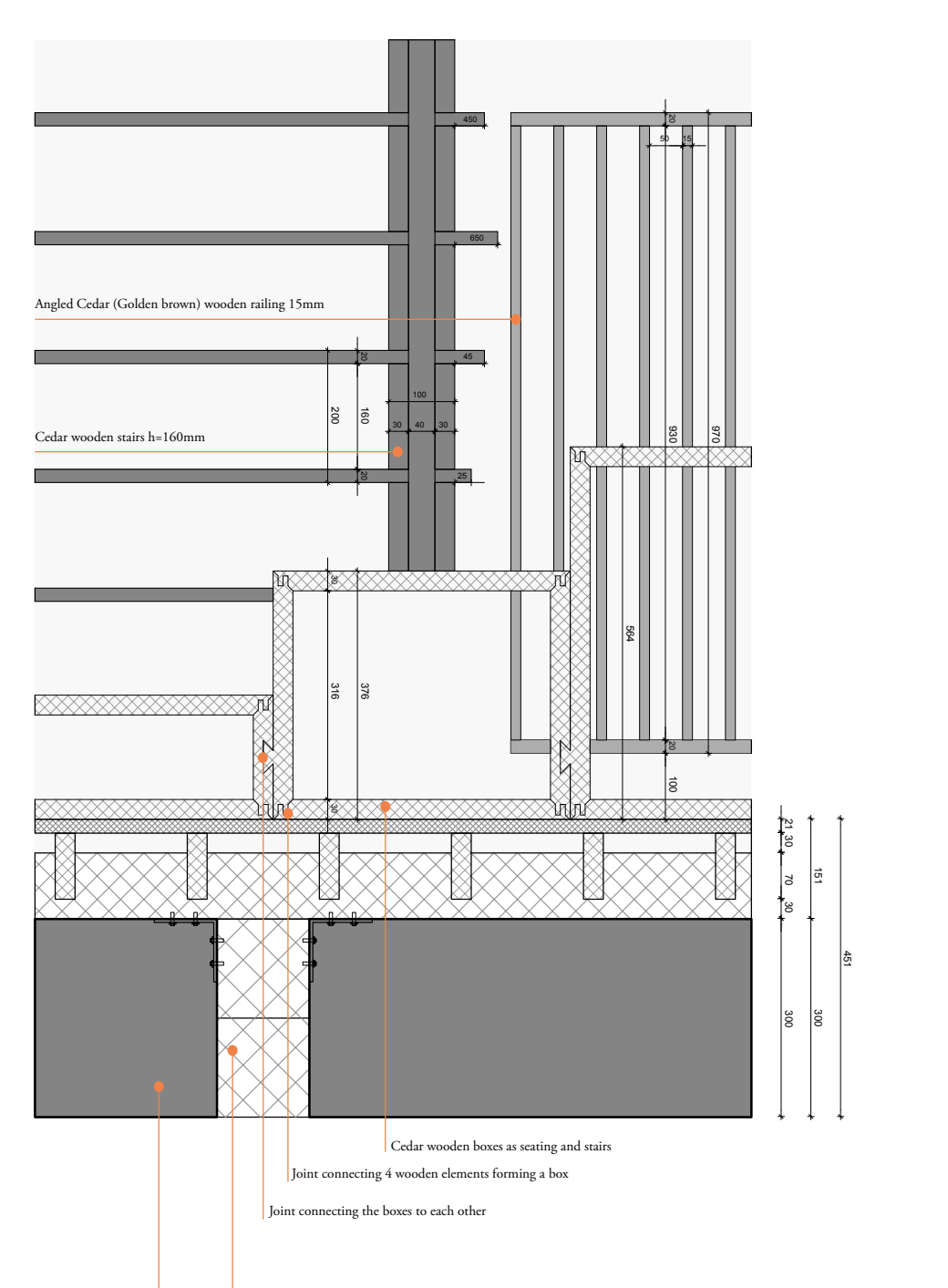
Angled Cedar (Golden brown) wooden railing 15mm
Cedar wooden stairs h=160mm
Cedar wooden boxes as seating and stairs
Joint connecting 4 wooden elements forming a box
Joint connecting the boxes to each other
Accoya glulam beam 300x140mm
Accoya glulam beam 300x210mm

DETAILS 1:5

04 THE ANGLED RAILING

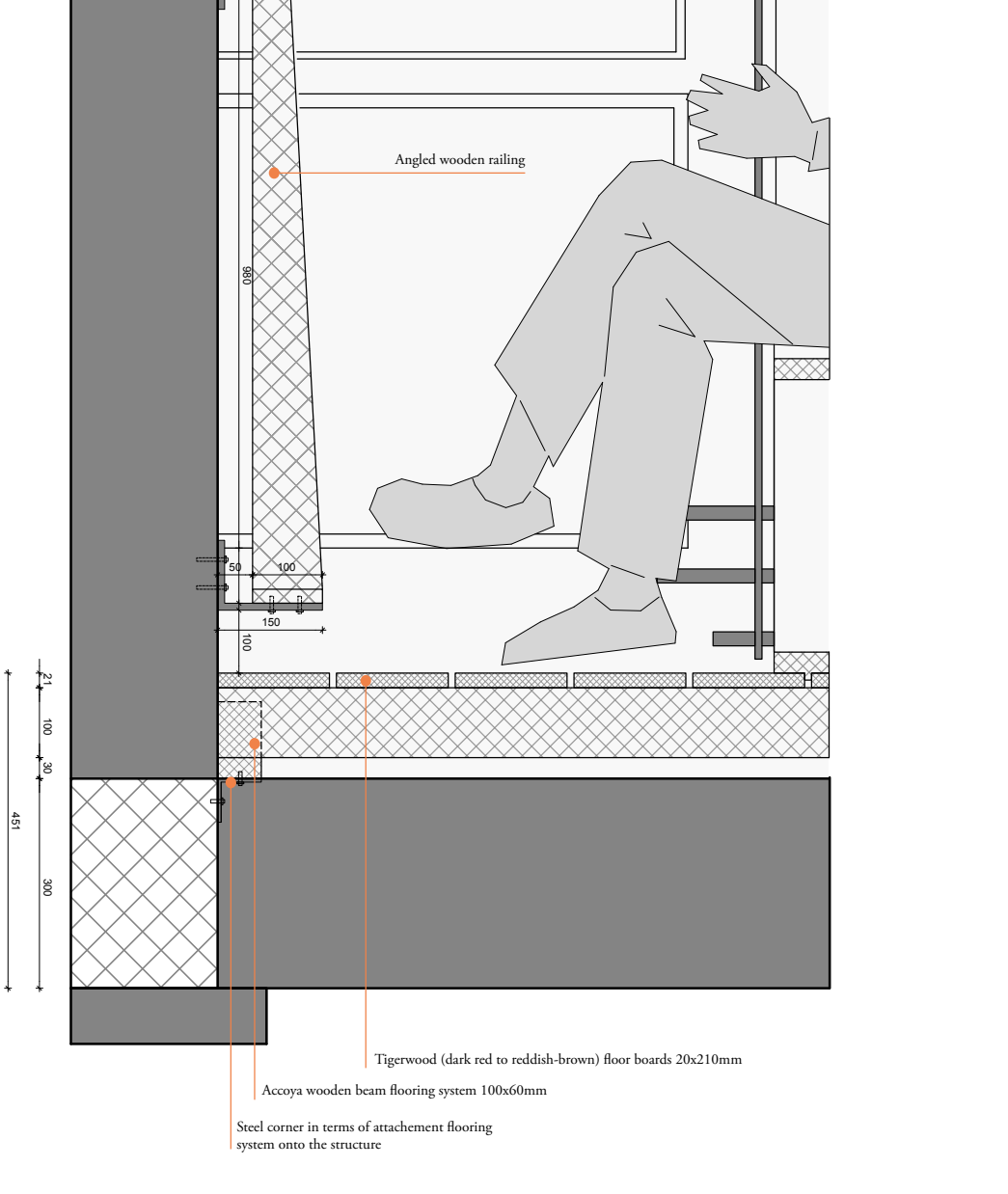
Steel corner for attaching wooden railing onto the structure
Angled wooden railing
Tigerwood (dark red to reddish-brown) floor boards 20x210mm
Accoya wooden beam flooring system 100x60mm
Steel corner in terms of attachement flooring system onto the structure

05 THE GREEN ROOF

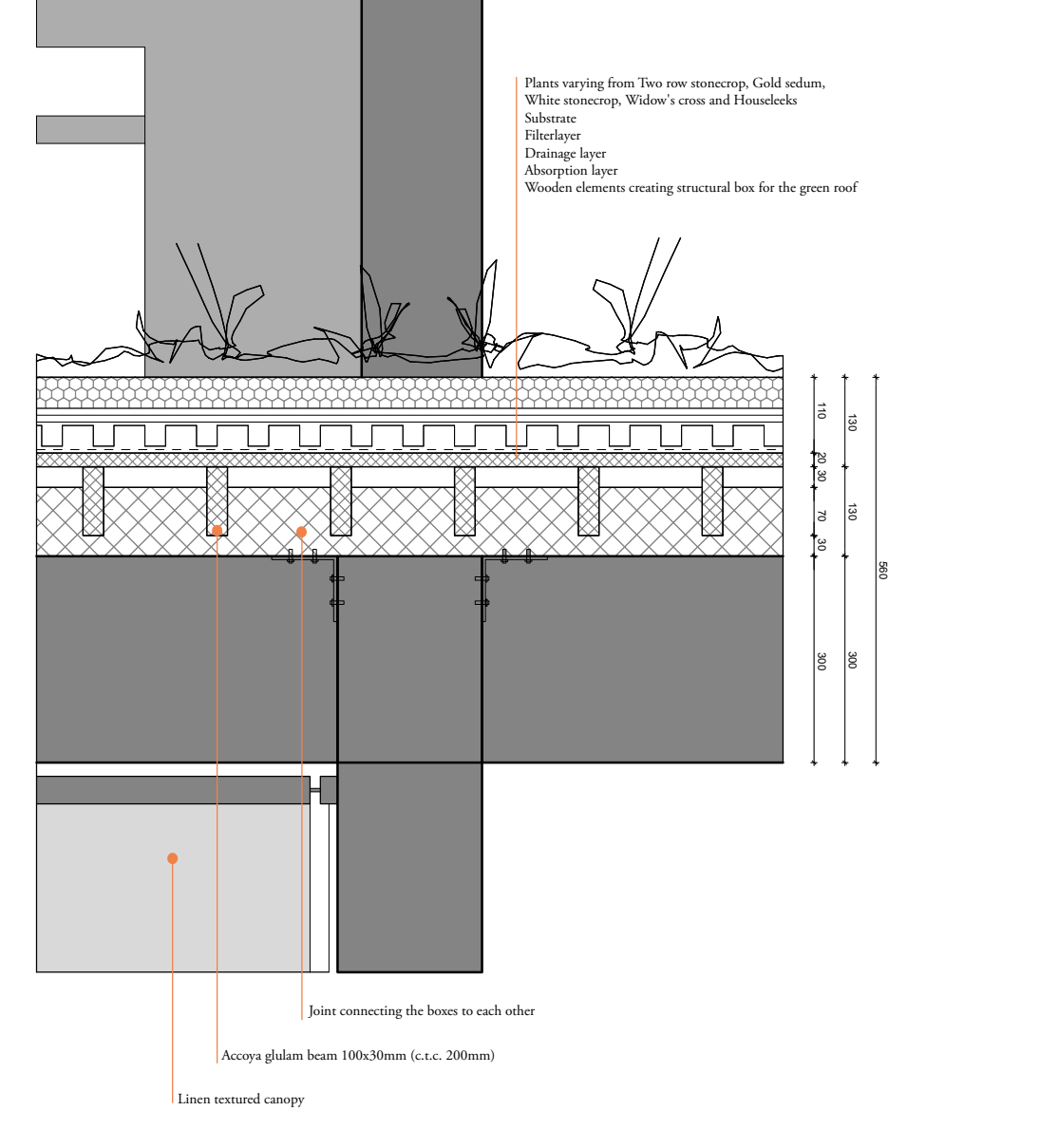
Plants varying from Two row stonecrop, Gold sedum, White stonecrop, Widow's cross and Houseleeks
Substrate
Filterlayer
Drainage layer
Absorption layer
Wooden elements creating structural box for the green roof
Joint connecting the boxes to each other
Accoya glulam beam 100x30mm (c.t.c. 200mm)
Linen textured canopy

06 THE BAY WINDOW

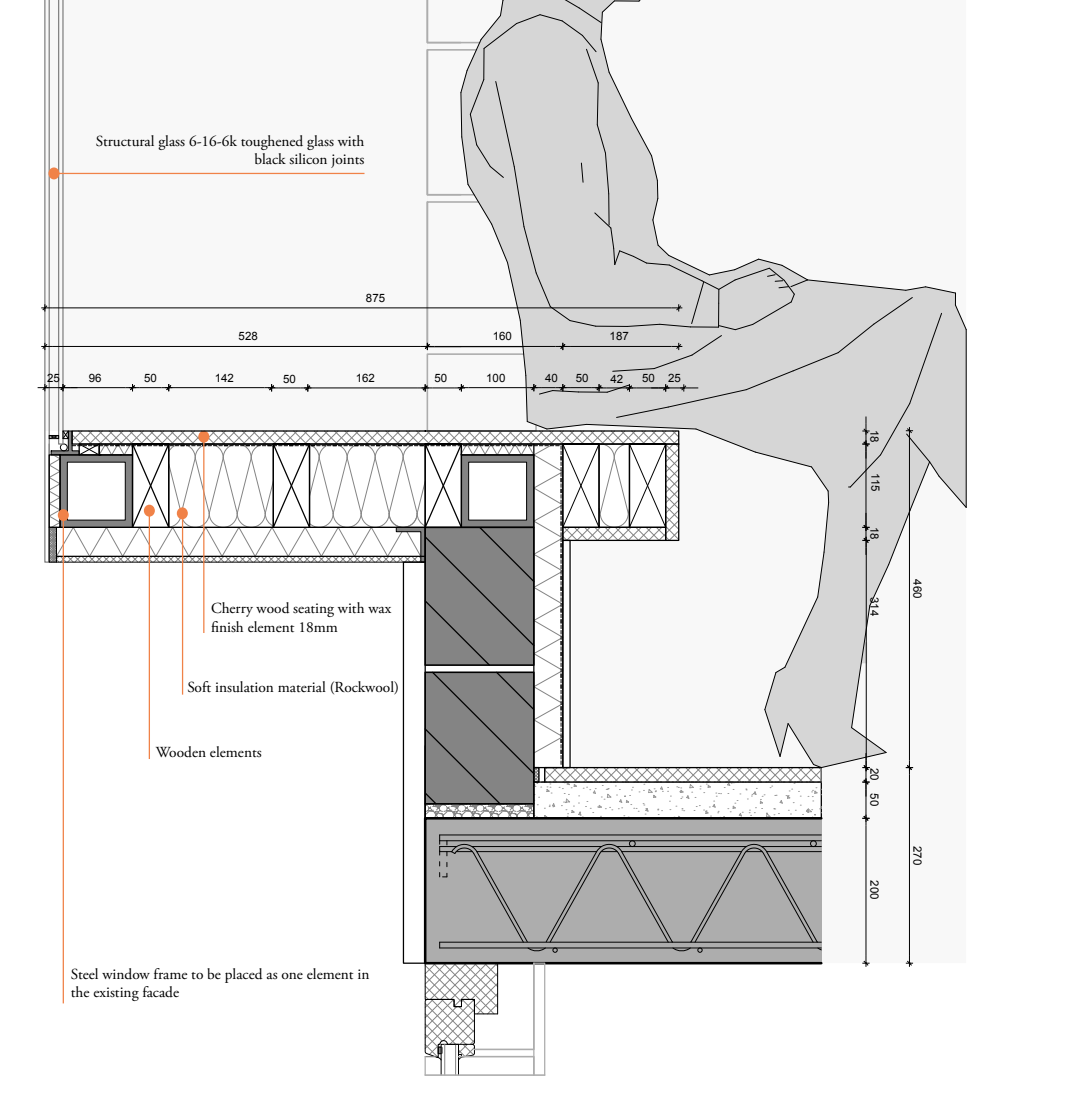
Structural glass 6-16-6k toughened glass with black silicon joints
Cherry wood seating with wax finish element 18mm
Soft insulation material (Rockwool)
Wooden elements
Steel window frame to be placed as one element in the existing facade