Governing Logistics Information Platforms

Bram Klievink, Huib Aldewereld, Arjan Knol and Yao-Hua Tan

Delft University of Technology

TU Delft Delft University of Technology

Challenge the future

Governing Logistics Information Platforms

DINALOG Extended Single Window (ESW)
WP3 final report

By

Bram Klievink, Huib Aldewereld, Arjan Knol and Yao-Hua Tan

Delft University of Technology

Date	10 October 2014
Author(s)	Bram Klievink, Huib Aldewereld, Arjan Knol and Yao-Hua Tan Delft University of Technology
Copy no	
No. of copies	
Number of pages	50 (PDF)
Number of appendices	0
Sponsor	Dinalog
Project name	Extended Single Window
Project number	034.23248

© 2014 TUD

Summary

The Extended Single Window (ESW) project aims to support goods flows by Information and Communication Technology (ICT). Specifically, the project takes the concept of Single Windows (often used in the sense that governments offer a single portal or interface to which businesses can submit information, supporting re-ruse by multiple agencies and coordination of government activities) and includes the business side; creating an Extended Single Window. An Extended Single Window includes business information systems and platforms and supports the re-use of business data, both for supporting new business applications and for making it easier to connect to government single windows.

The project is not alone in this ambition. For example, in the FP7 project CASSANDRA, funded by the European Commission, the concept of a data pipeline was developed and put to practice in various international trade lanes comprising four continents in total. Within the Netherlands, the national initiative to support innovations in logistics (Topsector Logistics) yielded the development of a Neutral Logistics Information Platform (NLIP, see www.nlip.org). This platform aimed to support information exchange in international supply chains. Similar to ESW, the starting point in the NLIP were the Port Community Systems (PCSs) in main ports in the Netherlands, and build from there. Given the similarities, ESW has been heavily impacted by the development of NLIP and much of the material in this report is in the context of the NLIP concept and programme.

However, be it a data pipeline, an Extended single window, or a logistics information platform, one of the pressing issues of these ICTs for information exchange in the international supply chain is the issue of governance. Governance primarily concerns what kind of decision structures are needed, for example on the process of agreeing on data ownership, the selection of standards, and the funding structures. What incentives can be created to have parties adopt it, and who should provide these incentives? Is value added functionality an option? If so, what kind of functionality; only for parties that agree to it and have a role in it, or can it actually be part of the funding structure? That makes the question for data ownership, and cost- and benefit distribution even greater. There are several configuration options for global information sharing ’system-of-systems’. For example, commercial platform providers could each offer commercial solutions, the adoption of which would benefit the supply chains using it because all of the platforms adhere to a similar standard for supporting compliance (Bharosa, Klievink, Janssen, & Tan, n.d.).

Apart from the commercial platforms of global IT solution providers, one of the most realistic developments paths is to have national platforms as main hubs, or ‘landing places’, connecting the complex

logistical processes and stakeholder setting of port environments to the international trade flows, information-wise that is. In this report, we analyse the route towards a national information platform. To ensure our analysis is rooted in empirical material, as a case study we picked a specific Port Community System (PCS) as one of the building blocks of the national information platform.

The case study comprises three parts, of which the key findings are:

- As the NLIP/ESW is all about value-added functionalities for the sector as a whole by making smart combinations of data, we study three value-added services of the PCS. These three services (cargo information, inland manifest and discrepancy list) illustrate the role of a community system in bringing together a multitude of parties that are all independent but come together in specific trade lanes where the actions and information of one affect those of others.
- We analyse the role of the system in an export process. We find that this is largely community functionality that is needed for (the parties in) a port to efficiently operate in a competitive international environment. Our analysis shows how this kind of core functionality generates a steady stream of key data, both public and private, that is necessary to make the above-mentioned value-added service possible. These are often public-private combinations, with often one of more stakeholders that (more) directly benefit from these functionalities, but do require others to contribute (that benefit less or not). A major area for decision making that follows from this analysis is that for a NLIP/ESW, decisions need to be made on which functionalities are permissible and which data may be used for them (i.e. can data that have been provided for community functionality be re-used for value-added services?). This is also related to the issue of data ownership and any rights or permissions a custodian of data may have.
- Third, we analyse the role of the system in an import process. Again, this is core functionality, needed by parties involved in importing goods, whether they are involved in the logistics (handling in the port and hinterland transport), the trade lane (e.g. as a buyer or re-seller of the goods), or as an inspection agency (e.g. Customs, food and product safety). In this situation, the 'cargo information' service (described as part of step one) offers functionality for various parties involved. However, our analysis shows that this also yields a debate on the pricing of such a service, as well as the cost distribution. A major area for decision making that follows from this, is that of decisions on the finance structure of the system as a whole (e.g. which services are considered community functionality and how to fund that) and of individual services that need to be decided on at the community-level (e.g. how are costs and/or benefits distributed among parties that are involved in the service).

From the interviews we learn that stakeholders have multiple perspectives regarding the decisions at the community system level. Though NLIP/ESW is basically a federated system, the abovementioned aspects and areas for decision making transcend the level that individual actors can make decisions on. As

NLIP/ESW brings multiple communities (e.g. the community in a specific port or in a specific sector) together, these areas also transcend the level of communities that have existing collaborations at the community level. Dealing with these aspects requires processes or structures for collaboration among stakeholders for agenda setting and decision-making. We argue that this situation can be dealt with by developing a structure (e.g. an institutionalised process, potentially with stakeholder participation) for deciding on these issues in a way that makes the decisions and the process transparent to the stakeholders. Also, the structure needs to accommodate that stakeholders can raise issues, are heard, and committed to the outcomes. This actor-related complexity is the area of governance of NLIP/ESW, the topic of work package 3 in the ESW project, of which this is the final report.

When assessing the current governance related to NLIP/ESW, it becomes clear that currently much of the actor-complexity is funnelled on the technical complexity. In other words; the technical arrangement have to accommodate not only the technical complexity but also the positions and interests of the stakeholders that were involved in the development phase. Further adding to the complexity is that the types of operations and information exchanges that the NLIP/ESW should support are highly diverse, if it were to act as a national platform and pipeline 'landing place'. This complexity cannot only be dealt with by technical solutions, further emphasising the need for solutions in the area of governance. Currently, many governance-related issues are discussed and decided on in a temporary collaboration structure (ESW is a project and NLIP could also be considered a project, or a programme covering multiple projects). Some issues that stakeholders encounter may seem operational or technical problems, but at the core these revolve around deciding what NLIP/ESW may do, aims to do, how it does that, and who pays for what.

Our study finds that for the next step in the development of NLIP/ESW, a long-term basis for proper decision-making needs to be developed, also internationally. This basis entails that there be a structure and decision making processes that are able to ensure effective and efficient decision making regarding those aspects that transcend the level of individual actors (Veeneman, Ten Heuvelhof, De Bruijn, & Saanen, 2011). Parts of this structure are already in place in the existing NLIP/ESW programme, but its temporary 'project' basis is likely to be too permissive to be able to make decisions without risking a long, dragging process of strategic behaviour and negotiations. Also, the governance structures of the existing NLIP/ESW components (i.e. the PCSs) do work with representation of various stakeholder communities, but our research suggests that parties that are not involved directly (including parties that have representation) do not have a clear understanding of how decisions were made.

Contents

1. Introduction **7**

2. Background **10**
2.1. Information infrastructures for trade 10
2.2. The governance challenge 12
2.3. The Role of Port Community Systems 13

3. Approach **16**

4. Cases **18**
4.1. Data combinations for value-added services 18
4.2. Role of PCS in export processes 22
4.3. Role of PCS in import processes (Frugiventa Case) 24

5. Findings from the cases **35**

6. Governance of ESW **39**
6.1. The NLIP governance design 39
6.2. Analysis of the NLIP governance design 41

7. Conclusion **46**

Acknowledgements **48**
References **49**

1

Introduction

Developments like outsourcing, consolidation, and fragmented transport chains have complicated the organisation, control and supervision of trade flows (Hesketh, 2010). Furthermore, managing information and data in these logistics chains has become a huge challenge. The best (because original and correct) information on international goods flows is present in the information systems of the various actors involved in international trade. ICT innovations enable electronic connections and information exchange between these systems and thereby access and re-use of these original trade data by other actors in the supply chain (Tan, Bjørn-Andersen, Klein, & Rukanova, 2011). The systems of supply chain partners can be interconnected in inter-organisational systems and jointly form international information platforms for international trade. Through these platforms, data can be shared among supply chain partners and with government. These platforms can greatly enhance the visibility on and control over the supply chain, specifically for the parties with an interest in the goods themselves: buyers, sellers and government inspection agencies (e.g. customs, food- and product safety) (Klievink et al., 2012). This type of innovation is key to making today's international trade more efficient and secure.

These developments can be considered as a re-arrangement of the information infrastructure in international trade. Information infrastructures are heterogeneous sociotechnical systems: systems that involve both complex (physical) technical systems and networks of interdependent actors (Hanseth & Lyytinen, 2010; Tilson, Lyytinen, & Sørensen, 2010). Information infrastructures in international trade thus comprises the evolution and dynamics of existing information systems of supply chain actors, existing processes and procedures, and all the diversity in systems and relationships present therein (Hanseth & Lyytinen, 2010; Hanseth, Monteiro, & Hatling, 1996; Henningsson & Henriksen, 2011; Tilson et al., 2010). Over the past few years, multiple initiatives have been undertaken to connect systems from all over the globe to each other in a standardized way, to capture data from their original source and to facilitate the exchange of data. Two notable developments in this regard are:

- The concept of international data pipelines, linking buyers and sellers at either end of a supply chain through a series of integrated commercial and logistics systems (Klievink et al., 2012), and;

- The development of so-called extended single-windows and national information platforms, in which the hinterland and other trade-related sources are connected to (port-oriented) information platforms for international trade. In the domain of international trade, a Single Window refers to a "collaborative platform where trade-related information and documents need only be submitted once at a single entry point to fulfil all import, export, and transit-related regulatory requirements" (Keretho & Pikart, 2013).

The Extended Single Window (ESW) project aims to support goods flows by taking the concept of Single Windows (often used in the sense that governments offer a single portal or interface to which businesses can submit information, supporting re-ruse by multiple agencies and coordination of government activities) and includes the business side; creating an Extended Single Window. An Extended Single Window includes business information systems and platforms and supports the re-use of business data, both for supporting new business applications and for making it easier to connect to government single windows. This is a key element as international trade has substantive risks involved due to which border management and safety inspections have increased in complexity, and can cause time delays, cost increases, and negatively impact the competitiveness of supply chains (Holloway, 2010).

The information provisioning by the trade community towards government agencies has been a focal point for port communities for some decades. In many ports, port community systems (PCSs) exist. A PCS is an inter-organisational information system to improve the quality of information exchange within a (geographically concentrated) community, often in order to improve the community's competitive position (Romochkina, 2011; van Baalen, Zuidwijk, & van Nunen, 2009). Government organisations were often consulted or even involved in initiating these port community systems, as making combinations of data from multiple parties is vital for creating information that is valuable in the interactions between businesses and government (Romochkina, 2011). These PCSs form the basic building block for both international data pipelines and for extended single windows (or localised logistics information platforms, therefore from now on we also use the term NLIP/ESW). For pipelines, PCSs can serve as the 'landing place' where various data pipelines rejoin the physical goods flows. For NLIP/ESW, the data, functionality and user base already presented by the PCS offers a promising route for developing such a new system-of-systems.

Within a port environment these PCSs are central information hubs that offer complementary services to a port community as a whole, which are their main differentiator from the information systems of large businesses in the same community, such as terminal operators (Romochkina, 2011). Hence, apart from the system itself, the governance, shareholder structure and financing are key elements defining a PCS

(EPCSA, 2011). However, these governance structures cannot be transferred to the level of NLIP/ESW without question. Different communities are included, the public/private balance differs, and decision and funding structures are lacking. Therefore, in this report, we study a PCS in order to explore the topics that are or should be the locus of governance for NLIP/ESW and other new ICTs that aim to combine a public role, a community function and business value.

2

Background

2.1. Information infrastructures for trade

At the heart of the problem that contemporary developments aim to address is that data is fragmented throughout the supply chain. If one wants to know what is on a specific ship, a full picture can only be gotten by combining the data that the various parties have. Basically, the shipping line knows which containers are on board and knows which freight forwarder supplied it, the freight forwarder knows which boxes it packed in the container and knows the producer, and the individual producers knows what is in their box specifically.

To get full visibility on the goods actually entering the country, government supervision authorities such as customs, would need to be able to query the information systems of all of those parties (even more, in fact) to retrieve the data that each of those have on the shipment. To this end, information infrastructures are being developed at the national and international level in which the parties participating in a supply chain provide data that can be relevant to other supply-chain parties. The information shared between the parties includes:

- The transactional data (captured by buyer, seller, and intermediate parties in the supply chain);
- The physical data (as captured by container, vessel, truck, tracking and tracing-, and monitoring devices);
- The commercial risk management data (for example quality and technical compliance checks of the goods, ISO standards).

Figure 1 shows a simplified conceptual model of how an information infrastructure for international trade integrates data elements from various sources in the supply chain by joining-up the information

systems of parties in the supply chain, including buyers and sellers (for an elaborate description of this approach, see (Klievink et al., 2012).

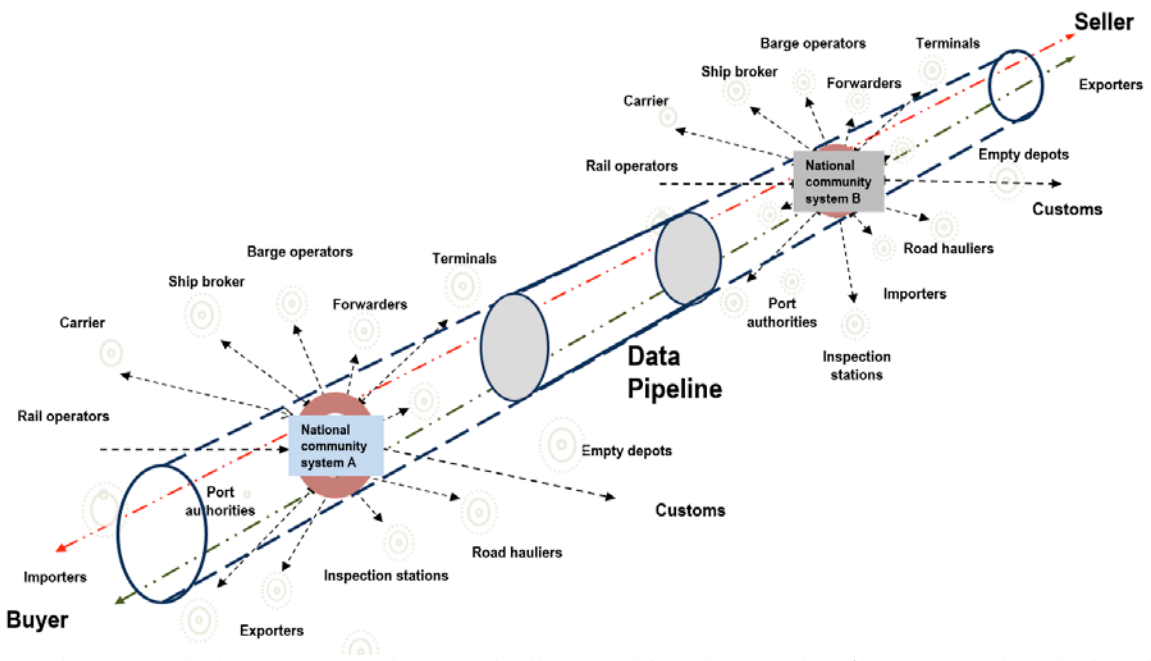

Figure 1: ***Information platforms servicing buyer and seller joined by a data pipeline (© 2012 David Hesketh and Frank Heijmann)***

In its full form, a data pipeline is fully distributed and would serve as a messaging platform, without storing data. This would require that the information systems of all companies open-up using the same standardised interface. Given the autonomy of the actors, the varying levels of IT maturity of partners in the supply chain and because of (perceived) vulnerabilities that such an approach may bring, companies are looking for implementations closer to present-day practice (Klievink & Lucassen, 2013). Currently, the installed base of systems and actors that have – or are able and willing to quickly implement – standardised interfaces and join-up at a global level, is limited. However, localised communities often have tighter links, including proprietary interfaces and non-technical arrangements (e.g. contracts) in place. Figure 1 shows how community systems (such as PCSs) play a key role as information hubs for individual countries or ports along the supply chain. Port community systems are key inter-organisational systems in those geographically bounded communities. If they can serve as 'landing places' for the international information infrastructure, they can greatly enhance the installed base by bringing in the many connections they have (both in terms of service agreements and ICT interfaces). These PCSs also store data, which is important for functionality that relies on combing data elements from multiple parties, for example for activities related to some government function (e.g. import, export, transit, dangerous goods, etc.). However, at the same time these PCSs are limited by their own legacy, both with regard to their technical configuration and with regard to their organisational configuration, including the governance of the PCS.

2.2. The governance challenge

One of the main challenges for international trade information infrastructures is how the diverse and (also geographically) dispersed business community can be joined-up to support visibility solutions that cross many international trade lanes, but to do this without a single lead actor with the power or jurisdiction to decide on a solution. Due to the international nature, central control or authority is absent or obscure. A number of governance-related issues complicate widespread adoption. Examples of the main issues are:

- Standards with regard to data exchange formats, data sets and uniform information system interfaces. To be acceptable to the business community and governments alike, open and neutral standards have to be used, including World Customs Organisation, UN/CEFACT, and IATA;
- Authorization and security facilities to settle ownership of data, as well as custody and usage rights with regards to these data elements, and safeguarding data is distributed and shared in accordance with these rules.
- Stakeholder and financing structure. In absence of a central actor, the major challenge lies in agreeing on common solutions for the abovementioned topics. At the global level, a open market with multiple providers will offer their services, varying from purely IT infrastructure to full services. Major supply chain actors will choose or vary among the value propositions, which will all vary in how they deal with stakeholders and will have varying financial arrangements.

These issues will have to be addressed to enact global data pipelines as well as national information platforms and extended single windows (i.e. Single Windows that extend to include the private sector also). These innovations should solve the current issues with information quality in international supply chains. However, as the 'last leg' of the information infrastructure - connecting to a wide variety of businesses and local and national government agencies - is incredibly difficult and probably the only way to make big steps is to build on to existing community systems such as PCSs. A port community system is an information hub, through which the business community in the port can exchange information that they need as part of their logistical processes. Through this function, a PCS has custody of much information that is relevant in the port environment. A PCS also plays a role in much of the data exchange between businesses and government, although companies can exchange information with government directly. The electronic exchange of data reduces the administrative burden, and saves operational costs (e.g. on personnel and couriers).

Apart from exchanging information among business actors, PCSs are often the linking pin between the business community, the port authority and government inspection agencies such as customs. In fact,

many PCSs have originally been set-up or at least initiated by a government organization (Romochkina, 2011). This is because much of the reporting towards government contains data of multiple actors. For example, in the clearance process at export, data need to be combined from (amongst others) the exporter (the export declaration), from the terminal (on which vessel goods were loaded), and the port authority (confirmation of vessel departure). By combining these data through a PCS, customs knows that goods have been exported and a confirmation of exit can be provided to the business.

However, whereas a PCS is primarily a clearing house (Kubicek & Cimander, 2009), the data pipeline is based on standardization (direct multi-lateral exchange), and national platforms in the form of NLIP/ESW are a sort of standardized exchange between various platforms like PCSs; i.e. platforms talking to each other. Whereas the PCS can and must rely on governing by contacts and contracts with all kinds of actors, and agreeing on individual services and uses of data and is therein supported by having a specific role and data structure, data pipelines and NLIP/ESW have to rely on openness and acceptable (open) standards. Thus, if PCSs are going to play a key role as part of national platforms or as a landing place for international data pipelines, the inherent tension between the community role, the public function, and the commercial aspects are bound to play out.

2.3. The Role of Port Community Systems

The empirical part of this study is based on Port Community System (PCS) as a key component (or even provider) of an NLIP/ESW in offering data exchange and value-added functionality, specifically those services that have a user/provider base spanning multiple stakeholder groups (e.g. public/private) and hence require some form of collaboration between those stakeholder groups. PCSs have been developed to support the data exchange amongst business actors in the port and with the port authorities by electronic means. According to the European Port Community System Association (EPCSA), a PCS:

- "is a neutral and open electronic platform enabling intelligent and secure exchange of information between public and private stakeholders in order to improve the competitive position of the sea and air ports' communities;
- optimizes, manages and automates port and logistics efficient processes through a single submission of data and connecting transport and logistics chains." (EPCSA, 2011, p. 1) (for an elaborate description of the background and role of PCSs, see the ESW Year 2 report).

PCSs operate in an area marked by high volatility. Current developments that affect the role PCSs play now and are able to play in a national or international data exchange platform include:

- The need for reduced public spending, e.g. in the context of austerity and efficiency programs in government at multiple layers (e.g. national and regional);
- New ICT innovations. In previous ESW reports, we have analysed how these developments could lead to further commercialisation of services, and even privatisation of PCS providers. The ICT innovations vary:
    - Some of them initiated or driven by government (primarily the development of Single Windows, such as the Dutch Single Window Binnenvaart (BSW) and the European directive for the Maritime Single Window (MSW));
    - Some of them are business driven (for example new (often web-based) solutions by commercial IT service providers, offering a range of logistic IT applications including functionality that transcends the level of individual organisations), and
    - Some of them in collaborations (such as the NLIP as a collaboration between various business communities, PCSs and government and EPCSA as a cross-border PCS collaboration).

To make big steps in NLIP/ESW development, existing platforms should be re-used, of which PCSs are the main ones as they connect different stakeholders to each other (trade lane- or sector specific platforms, such as Hubways, are also proposed parts of NLIP, but are likely to have less aspects that cannot be controlled or decided on at the level of individual actors or collaborations). EPCSA has recently released a guide for PCS development and indeed they identify the organisation of a PCS as one of the key topics, especially considerations with regard to:

- "Model – private, public or joint public/private
- Shareholding and types of shares
- Financing
- Governance" (EPCSA, 2011, p. 8).

The question of governance in NLIP/ESW is primarily related to the question of how information sharing and orchestration services that require data from multiple sources, can be set-up in a way that creates value for the wider stakeholder community, in which parties interchange in the roles of user, provider and enabler. Creating value adding functionalities however require sets of agreements and other instruments governing the data exchange, functionality and the interdependence these present to the stakeholders (both providers and users of data). This also extends to the governance of the operator of the information exchange platform and providers of services, specifically those services that are based on combining data from multiple actors. The current design of PCS that we study and that is a key component of the NLIP, is that of a public-private collaboration. In that design, data are handed over to the PCS but are still owned by the

individual actors submitting the data. This enables government to access the data, and enables the PCS to optimise port operations by enabling companies operating in the port to share data without losing control of it.

3

Approach

For NLIP/ESW, one of the most realistic developments paths is to have national platforms as main hubs, or 'landing places', connecting the complex logistical processes and stakeholder setting of port environments to the international trade flows, information-wise that is. In this report, we analyse the route towards a national information platform. To ensure our analysis is rooted in empirical material, as a case study we picked a specific PCS as one of the building blocks of the national information platform. The case study comprises three parts, making it an embedded case study (Yin, 2009), where we study multiple roles and data-combinations within the same context, to ensure a better understanding. The three parts are:

- As the NLIP/ESW is all about value-added functionalities for the sector as a whole by making smart combinations of data, we study three value-added services of the PCS. These three services (cargo information, inland manifest and discrepancy list) illustrate the role of a community system in bringing together a multitude of parties that are all independent but come together in specific trade lanes where the actions and information of one affect those of others.
- We analyse the role of the system in an export process to understand the role of a PCS for the community of business and government agencies involved in exporting goods. These types of processes generate a base set of data that enable the value-added functionalities. We analyse what kind of governance issues this leads to.
- We also analyse the role of the system in an import process. Again, this is core functionality, needed by parties involved in importing goods, whether they are involved in the logistics (handling in the port and hinterland transport), the trade lane (e.g. as a buyer or re-seller of the goods), or as an inspection agency (e.g. Customs, food and product safety). In this situation, the 'cargo information' service (described as part of step one) offers functionality for various parties involved. We study this to both broaden our case study and to elicit additional governance issues.

For all sub-cases, we made a detailed mapping of the process and data flows, to enable the identification of issues in the current situation. These mappings and descriptions are based on interviews with the PCS, a branch organisation representing a large group of shippers/consignees, a carrier, a terminal operator, and Dutch Customs. Furthermore, documentation on services, processes and pricing also were used in the analysis. To ensure that our understanding of the current situation was correct, we discussed our descriptions with our interviewees or sent them for checking. For gaining a more detailed understanding the governance issues, also specific to NLIP/ESW, we interviewed additional people from customs, the Ministry of Infrastructure and the Environment, people involved in EPCSA, people involved in other Community Systems, and people from various businesses including forwarders and shippers.

4

Cases

4.1. Data combinations for value-added services

Data sharing, especially where public-private boundaries are crossed is a challenge in all ports. To assess the role a PCS has, we analyse three services provided by a PCS in one of the biggest ports in Europe. In the design of the PCS offering these services, data ownership remains with the initial owner. Note; who the owner is can be subject to discussion also, for example with regard to the gate-in message, the carrier (in case of carrier-haulage), the merchant (in case of merchant-haulage), the terminal (in any case) and the owner of the goods claim ownership. Sometimes that presents difficult situations, e.g. in the case of the gate-in message. A key part of the PCS is therefore the authorization structure; the provider of the data may determine who is eligible to see the data, and can track who used the data.

4.1.1 Cargo Information

This service is an example combination of supporting and re-using Business-to-Business (B2B) information and Government-to-Business G2B information. The service combines vessel arrival information and discharge information for the purpose of visibility towards Importers and Freight Forwarders, but this information is also used to enable the market to reuse the information for customs on-carriage declaration, which can reduce the mistakes in clearing the summary declaration ("zuiveren declaratie"). The figure below gives an overview of the Actors involved (top) and the ordering of the messages (bottom).

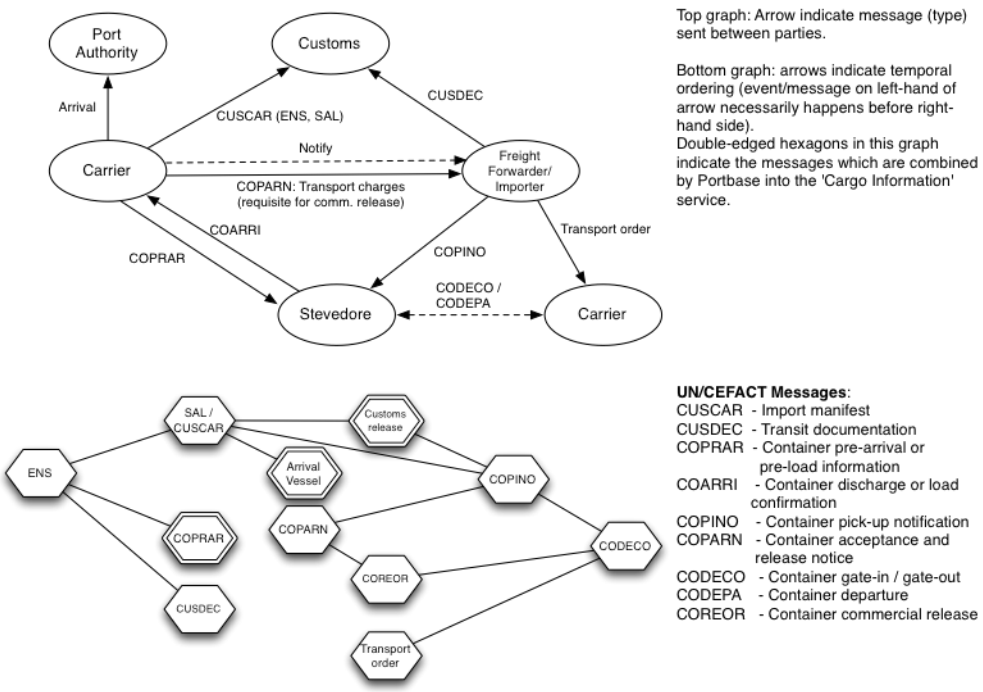

Figure 2: Actors and Partial Ordering in Cargo Information Service.

The ship broker / carrier agent (Ocean carrier) informs Customs of the incoming goods (via ENS, 24 hours before loading the cargo in the port of loading; and via the Summary Declaration (SAL) 72 hours before discharging the cargo). It informs the port of the ships arrival. It informs the Terminal (Stevedore) which containers need to be discharged in the port. And finally, it will inform the Freight Forwarder (or Importer) that the cargo has arrived / will arrive in the port of discharge. The Freight Forwarder can make an early declaration of the goods to Customs, will contract a carrier for the on-carriage transportation, and will (though typically by proxy) collect the goods at the terminal.

There are several orderings in which these messages can follow each other, and it is hard to define a single ordering that holds for all containers. Instead, we have chosen to indicate the ordering relation between the messages/events (see the bottom of Figure 2). Instead of specifying the absolute temporal relation, we just give the way some of the messages are necessarily ordered. For instance, the ENS necessarily precedes the SAL, because of their temporal constraints (ENS must be launched 24 hours before loading, SAL 72 hours before discharge). Another example is that the SAL precedes the Customs release (at least in current legislation). Messages/events that are unrelated can happen in any order; e.g. Customs release can precede, succeed or even happen at the same moment as the Vessel arrival. While in practice, most of the times, a single ordering will happen (Customs release succeeding Vessel arrival), the other possibilities are not impossible.

Portbase collects and combines a number of these messages/events. The shared information is used to offer the Cargo Information service to the forwarders/importers. These events have been marked with a double-edged border in the bottom of Figure 2. In some cases, the communication between the Supply Chain Actors is direct, and Portbase only receives a copy of the message at a later stage. In other cases, Portbase functions as the messaging service, that is, delivering the message to the intended Actor(s) on behalf of its sender, while also keeping a copy of the message for the services that Portbase provides.

The need of the Cargo Information service follows from the difference of view on the supply chain by the actors involved; Customs view the chain from the perspective of consignments, while most of the other actors view it from the perspective of containers. The matching of containers to consignment items, called 'afschrijven', is the challenge for Customs. Customs connects consignment items to products, while the other actors work from container to products. This now involves a manual step where someone at Customs has to check the resulting lists.

4.1.2 Inland Manifest

This service is a new service in development by the PCS on behalf of a government agency. It is about creating the manifest of containers on inland barges. Currently, many barges use paper manifests containing data of low quality. On the import side, the PCS can reuse information flows that they already control. The information flows that need to be combined are the barge load reports from the terminals (what has been loaded on the barge), matched/combined with container/cargo manifest data from the Carrier agent.

The creation of the manifest for barge export (from inland terminals to the mainport and then overseas) is more difficult/complex since one will need to connect all the inland terminals as information sources. However, the PCS already has existing relationships with many shippers that have goods flows through the ports that use the PCS.

For (deepsea) import, the stevedore gets a BAPLIE EDI message from the (ocean) carrier, which contains the stowage plan of a ship. The stevedore can then unload the necessary containers, based on the discharge list (COPRAR) that it receives from the carrier. After discharge, the terminal sends a COARRI message to confirm the unloading of those containers. In the meantime, the terminal will also be informed about the modalities that will pick-up the containers (via COPINO messages from the Freight-Forwarders). After receiving the commercial release from the carrier agent (via a COREOR message) the terminal will load the containers on the on-carriage modality. It will send a load confirmation to the modality/owner (via a

CODECO, container gate-out, or CODEPA, container depature, message). In the case of barge loading, the PCS combines the CODECO and COPRAR/COARRI messages to create the inland manifest. The information in the inland manifest is complemented with information obtained from the containers' CUSCAR message (of which the PCS has a copy).

The PCS currently only does this for import container flows. Obtaining the information for outgoing containers on barges to create the inland manifest is currently out of scope.

4.1.3 Discrepancy List

Another service combines information from the government side (manifest, what has been declared) with terminal information (discharge confirmation). The service that the PCS can provide on basis of these information flows is showing carrier agents and customs what has been declared (in the Summary declaration of unloading goods (SAL)) and what has actually been discharged. This results in a list of shortland/overland containers. Figure 3 below presents a Sequence diagram showing the actors involved and the messages sent between each.

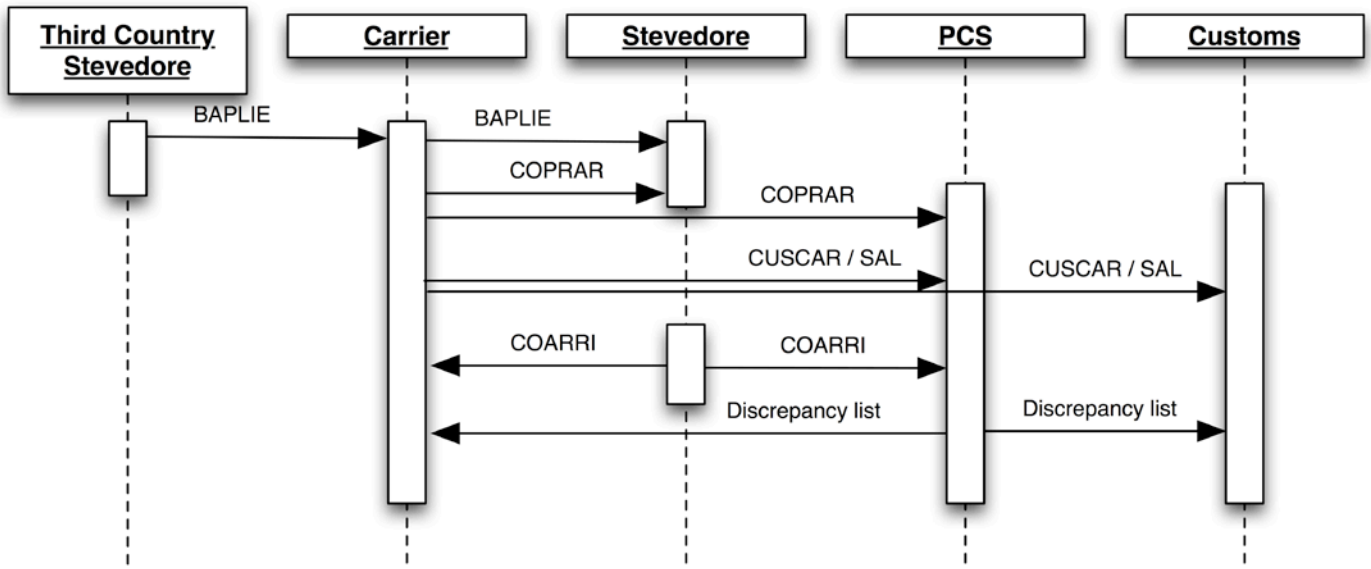

Figure 3: Discrepancy List Sequence Diagram.

First, the stevedore in the mainport receives a list of containers that need to be discharged at Rotterdam. This list is provided by the carrier agent (Carrier in Figure 3). Combined with the information where those containers are on the vessel (the stowage plan, which it also receives from the carrier agent (but made by the last terminal unloading/loading the vessel) it can then proceed to discharge those containers. In the

meantime, the carrier agent will have launched the summary declaration of goods to be discharged (SAL). During the discharge procedure and upon departure of the vessel, the terminal (stevedore) will inform the carrier agent (and also the PCS) of the containers that it has discharged. Now, the PCS compares that information from the Discharge confirmation report with the SAL to create the list of shortlanded and overlanded containers (i.e. too few or too many containers discharged with respect to the manifest). This list is presented to both the Carrier agent (who can now start the procedures to amend the summary declaration) and to Customs (who blocks overlanded containers until a SAL has been received, as a container may not leave the terminal without an correct summary declaration).

4.2. Role of PCS in export processes

We have looked at the current export process from a Customs perspective to identify the important players in the process, and their relations. For this, we discussed the export process and the role of a Port Community System as the linking pin between the business community and government (primarily Customs).

Based on interviews we arrived at the following analysis. Taking a Customs perspective, the export process is taking place in three parts:

1. Declaration of goods for export;
2. Transport of goods to Customs office of exit;
3. Determining the exact time of departure of the goods from the EU.

Part 1: In the export process, a declaration of export is made by the exporter or his agent – the freight forwarder, and sent to the Customs system Sagitta export (DSU – 'Douane Sagitta Uitvoer'). All mandatory data-elements have to be filled in this declaration. After verification, the declaration is given a unique reference number called Movement Reference Number (MRN). The reception of the MRN counts as a consent to transport the goods to a Customs office of exit.

The shipment information is submitted to the Export Control System (ECS) and the intended Customs office of exit is notified of the expected arrival of the shipment with the specified MRN.

The PCS receives the MRN from the exporter/agent[1] and the information from the booking system of the shipping company, combining these data elements.

[1] Note that not all exporters/agents send the MRN to Portbase

Part 2: When the goods are offered at the Customs office of exit, a message is sent to the Customs ECS system (in practice done by the container terminal in the port of departure which is licensed to act as Trader at Exit). After receiving the message, the status of the shipment is changed from 'expected' to 'arrived' in ECS.

The PCS services this for all terminal operators in Rotterdam, except ECT. Portbase receives from all terminals the 'arrival at exit', but in case ECT is involved it only stores the data for future use to prepare the manifest. In all other cases, the information is used to trigger the transmission of the 'arrival at exit' message to the Customs ECS system.

The shipping company can make a 'Cargo Declaration Export' manifest, containing all shipments that are leaving on the ship. Portbase can assist the shipping company in this step by making the 'Cargo Declaration Export' manifest based on a received loading list by combining that information with the 'arrival at exit' information (this creates the 'draft manifest' (Dutch 'klad manifest')). The draft manifest created by the PCS is available in the web interface for the shipping company which checks the information and makes additions where needed.

Part 3: The shipping company sends, via the PCS, the 'Cargo Declaration Export' manifest to the Customs ECS system. The manifest contains the MRN, and the container number; those are linked to the booking number, the ship and the ship route (the booking number is not sent to Customs). Through the manifest, Customs receives a notification of the expected date and time of departure. The combination of those elements (MRN info, arrival info, load info, voyage info) is a typical functionality of a PCS.

Under the current Dutch Customs law, it's mandatory that the cargo declaration export manifest must be sent before the departure of the ship.

The Port Authority ('havenmeester', in Dutch) reports the departure of the ship in ECS and confirms the cargo. The latter is not specifically done by the Port Authority, but a combination of the voyage ATD and manifest data from the carrier agent.

Based on the report of the Port Authority, Customs sends a 'Confirmation of Exit' through DSU to the exporter/agent. In practice, because Customs can't receive the message from the Port Authority yet, Customs already sends the 'Confirmation of Exit' four hours after the expected time of departure as is mentioned in the manifest.

In a more detailed interview with someone from the PCS, the export process was further analysed, leading to the following UML-Sequence diagram. In the diagram the role and function of the Port Authority is missing.

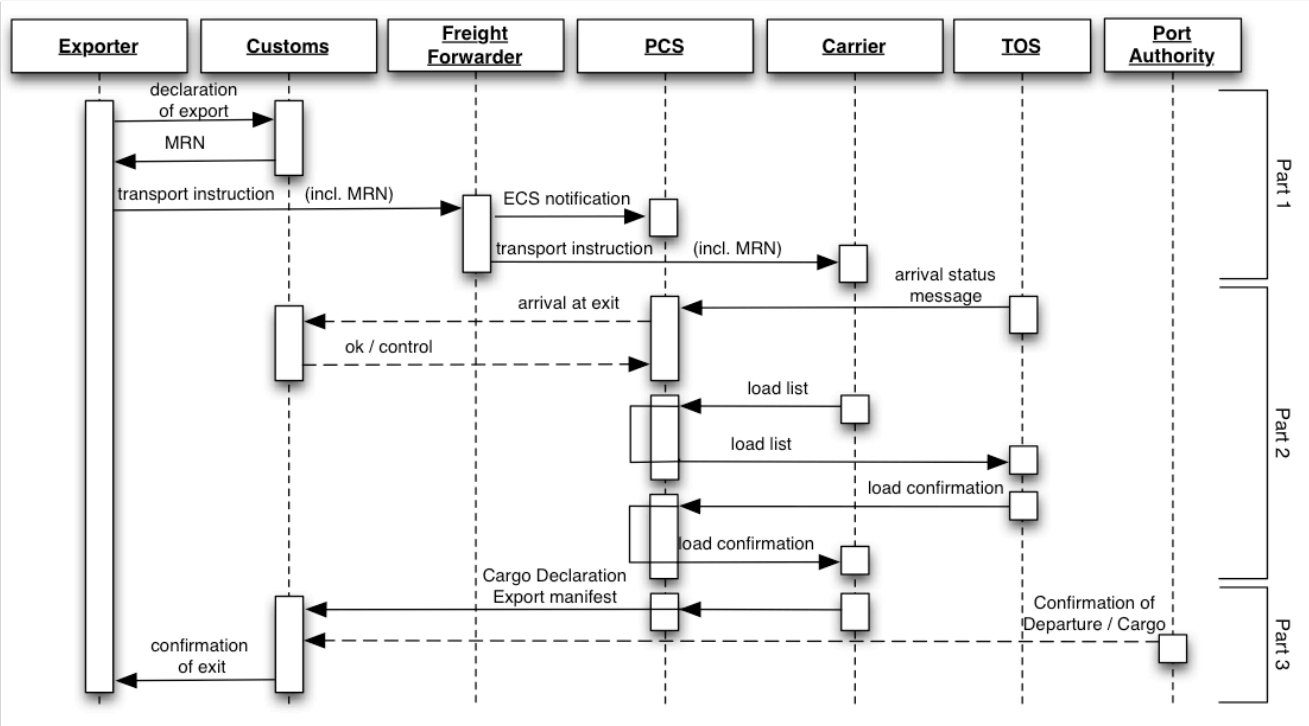

Figure 4: Export Process Sequence Diagram

4.3. Role of PCS in import processes (Frugiventa Case)

FrugiVenta represents import and export companies responsible for 80% of the fruit and vegetable import/export in the Netherlands. FrugiVenta provides services that are not part of the core processes of these import and export companies. For example, FrugiVenta interprets national and international legislation and transforms this to programs and work approaches for the import and export organisations.

FrugiVenta represents 1.500 importers (with a relation to the Netherlands) of fruit and vegetables. They import approximately 250.000 refrigerated containers (primarily reefers) per year through terminals in the Port of Rotterdam. FrugiVenta surveys the satisfactory level with various service providers involved in the import of fruit and vegetables.

The issues put forward by FrugiVenta are related to the loss of value due to not having an overview of the processes related to the import, and therefore the inability to plan the downstream part of the supply chain. In the following we will explain the issue of FrugiVenta in more details.

4.3.1 Background: Frugiventa case

The typical supply chain for the import of fruit and vegetables has a lead-time of ½ - 3 days (from the moment of discharge from the ocean vessel), over the weekends this increases to 5 days. The actual distance between the Port of Rotterdam and the warehouses of FrugiVenta is ½ hours by truck. The lead-time fluctuates depending on the number of inspections, which makes it difficult to plan the transportation and distribution to the retail partners and the end-consumers. Since fruit and vegetables are products with a limited lifetime and decreasing value as time goes on, the lead-time is an important factor for the profit of the importers.

There are several causes for this strong fluctuation in the lead-time of fruit/vegetable containers. Some of them are the following:

1. Unknown and potentially out-dated estimated time of arrival (ETA) and actual time of arrival (ATA) for shipments; this makes the planning of on-carriage transportation difficult and therefore more costly;
2. Fruits and vegetables shipments can be inspected by several different authorities, which are not coordinated. This causes unnecessary delays and cost compared to a situation where the authorities would coordinate their inspections;
3. Containers from certain origins (e.g., Columbia) have a very high chance of being targeted for inspection (containers from certain origins are scanned/inspected 100% of the time);
4. A cascading effect of small design choices (each on their own of innocent nature) that appears to have an enormous effect on the lead-times. Examples of these small choices are, e.g., opening hours of offices involved, communication in emails (cannot be processed automatically) rather than xml (can be processed automatically).

The first cause is an issue of opaqueness in the supply chain. Improving the information flows between the various partners in the chain will improve the quality of information about the vessel estimated/actual arrival time, thus solving this issue. A logistic information platform could provide this improvement by making the supply chain more transparent (Klievink et al., 2012). For example, in the Port of Rotterdam, the Port Community System (PCS) Portbase provides a service “Lading Information 2.0” (see description of Cargo Information service earlier in this report) for Freight-forwarders, which combines Carrier information (which has little precision on ETA/ATA because the information is rarely updated when changes happen) with AIS tracking information (by Royal Dirkswager). The precision of this service is

reported to be within a one-hour margin for vessel arrivals within the next 72 hours (and even less when the vessel is closer).[2]

The second cause is an issue related to the concept of Coordinated Border Management for improving the coordination of inspections from different authorities, and has been identified in an earlier report (Overbeek, Dignum, & Tan, n.d.). A covenant was signed between Dutch Customs and the other inspection authorities[3] that Customs would have the direction to coordinate the various controls. Under the direction of Customs, these authorities cooperate in the so-called Regenboogteam (Rainbowteam) that shares specific information and cooperates in planning all controls at once, which should lead to fewer delays for customers. In practice, however, it appears that this has not yet succeeded operationally, and each authority still performs their controls separately.

We cannot solve the third cause, as this has to do with EU scanning regulations. Containers from certain origins will present a greater risk than containers from other origins (to contain contraband, for example). It is therefore mandatory to scan more (or even all) containers from high-risk origins. This is not likely to be changed, although improvements in the level of control that businesses have on the supply chain may offer options for government to piggy back on those controls as well.

The last cause is an interesting one, given the level of automated information exchange in the Port of Rotterdam. The fact that the office of, for instance a terminal, closes over the weekend, should not have such a big impact on the containers moved/transported through that terminal, as EDI and xml message can be processed automatically, and containers can be released even without manual intervention.

In this section of the report we focus our investigation on this latter cause, and try to find out why these small influences, such as the opening times of terminals, have such a big impact on the potential delays of containers. In this section we will look into the processes surrounding the delays that happen due to containers remaining stuck at unmanned terminals during the weekends. In interviews with the container terminal, FrugiVenta, Portbase, and Customs, we have come to the conclusion that the delays happen due to inefficiencies in the communication of the customs release of containers. Before we describe the process of how containers are released by Customs in the Port of Rotterdam, we have a brief look at how the release of containers works in general.

[2] "Ladinginformatie 2.0" also uses the availability of docking places to calculate the potential delays on vessel arrivals.

[3] Other inspection authorities are, for example, Food and Consumer Safety Authority (nVWA), National Police (KLPD), Harbour Authorities, and the Environment and Transport Inspectorate (ILenT).

4.3.2 Customs container release

In general, Customs communicates container releases with the declarant (the person or organization that filed the original declaration). In the case of containers, the declaration is typically done by the Carrier (or the Carrier agent). The declaration in question is the "Summiere Aangifte van Lossen goederen" (SAL), which is made by the Carrier 72 hours (typically) before the container is discharged from the ocean vessel. This declaration forms the basis of the targeting of the containers that need to be inspected (either by scanning or through physical control).

Customs uses two different container blockings: S-Block and D-Block. The former is placed on all containers arriving in the Netherlands (as soon as the container comes ashore), and is released only when sufficient documentation exists for import or transit of the container (i.e., a import declaration or transit declaration). The latter is only used for containers that are targeted for inspection (which can be either scanning, physical control (opening the container), or by sniffing dogs). With regards to the D-Block, Customs actually never communicates a container release explicitly; the release of a container can be derived from the absence of a communicated targeting message (NLBB15). The process is then rather simple:

1. Carrier sends ENS declaration (48 hours before loading container);[4]
2. Carrier sends SAL declaration (72 hours before arrival in port of discharge);
3. Customs sends NLBB16 to confirm receipt of either declaration (this message contains the initial movement reference number (MRN); this message is also used to inform the declarant of functional errors in the declaration);
4. Customs performs the risk analysis and targets containers for inspection;
5. Customs sends NLBB15 message to indicate that a container is targeted;
6. After inspection, a NLBB24 message is send to indicate that the container is released for on-carriage transportation.

The absence of the NLBB15 message on a D-blocked container, which is typically sent within minutes of the receipt of the ENS/SAL, implicitly authorizes the declarant to transport the goods. All messages by Customs (NLBB15, NLBB16, and NLBB24) are EDI/EDIFACT messages.

As the answers by Customs are send to the original declarant (the Carrier), additional communication is required to inform both the terminal and the importer (or a freight-forwarder operating on behalf of the importer) about the status of the container. This communication requires the processing of the Customs

[4] The ENS is only sent to Dutch Customs if a Dutch port is the first point of entry of the Carrier Vessel into the EU; if the vessel were to, for example, first dock in Portugal and then sail onwards to Rotterdam, the ENS is sent to that EU country instead.

messages and the generation of the appropriate messages to the parties involved. Typically, the terminals are informed via EDI or email messages, while the Freight-forwarders (or importers) are informed through email or even by phone.

In some cases, the handling of these messages by Carriers is batched (messages are collected and only handled once or twice every hour). To make matters worse, this batching and handling can be outsourced to offshore service desks, for instance, in India. The delays in the message handling that occur because of this batching and outsourcing can potentially lead to bigger delays in the handling of the container.

Optimisation of these processes can be obtained by optimising the information flows, as is done, for example, in the Netherlands by Portbase. With the exception of a few Carriers, Portbase handles all the Customs communications to the Carriers. For this, Portbase translates the EDI message into an email message (for the convenience of the Carrier, as those email message can be read by Carrier agents on their mobile phones). Moreover, Portbase informs the terminals and (subscribed) Freight-forwarders using the same information. In the next section we describe how the process of declaration, targeting and release is handled in the Port of Rotterdam, showing the communication optimisations provided by Portbase.

4.3.3. Container release in port of Rotterdam

In Rotterdam, the notification of containers being selected for targeting is not communicated from Customs to the Carrier, but (due to legacy) to Portbase instead. This puts Portbase in the position to inform both the Carrier and the Terminal about the containers that are selected for inspection. This optimises the processing of containers in the Port of Rotterdam (containers that need to be scanned can be planned for scanning automatically, for instance). Portbase also provides services to Freight-forwarders to be notified if their containers are being targeted for inspection. Just as the Carriers and Terminals, Freight-forwarders have to pay a fee for the use of this service.

The Table and Figures below give details about the process when a container is targeted for physical control ('Fysieke controle' or FYCO). We focus on just the FYCO, instead of all control types,[5] because the issues are more apparent in the FYCO case. Please keep in mind that the table and diagram below take a Customs perspective on the process.

[5] The other type of control indicated by an NLBB15 message is a scan. The processing of containers targeted for scanning is, however, largely automatised and has less of the issues apparent in the FYCO case.

Table 1 below introduces the process steps of the FrugiVenta case in the port of Rotterdam, clarifying how messages are transferred in Rotterdam when FYCO inspection is required by customs.

Table 1: Process steps FrugiVenta case in the port of Rotterdam when FYCO inspection is required by customs

Global process step	Detailed process step
Customs declarations prior to arrival	1. Carrier sends ENS / SAL to customs / Portbase prior to arrival in Rotterdam
	2. NLBB16: customs sends confirmation to carrier that ENS / SAL is received
S-block bill of lading: automatic block of bill of lading before arrival	3. S-block: whole bill of lading is blocked
	4. EU freight forwarder sends transit / import declaration to customs
	5. Customs conducts a declaration check based on received declarations from carrier and EU freight forwarder: check is ok
S-block release	6. S-block release: customs sends release of S-blocked bill of lading to terminal
D-block bill of lading: block of bill of lading in case FYCO inspection is required	7. Customs conducts a risk based analysis: FYCO inspection is required
	8. D-block NLBB15: customs sends notification to Portbase that D-block inspection is required
	9. Portbase notifies terminal of D-block via email or XML
	10. Portbase notifies carrier of D-block via email
	11. Carrier notifies EU freight forwarder of D-block
	12. Terminal blocks bill of lading for FYCO inspection
	13. Customs sends notification which containers within a blocked bill of lading do not require inspection via email
	14. Terminal releases containers that do not require inspection
	15. Customs conducts FYCO inspection: inspection is ok
D-block release	16. D-block release: customs sends D-block release notification to Portbase
	17. Portbase notifies terminal of D-block release via email or XML
	18. Portbase notifies carrier of D-block release via email
Ready for pick up	19. Carrier notifies EU Freight Forwarder of D-block release: container is ready for pick up

Figure 5 below (next page) provides a UML sequence diagram of the AS-IS situation of the FrugiVenta case, as described in Table 1 above.

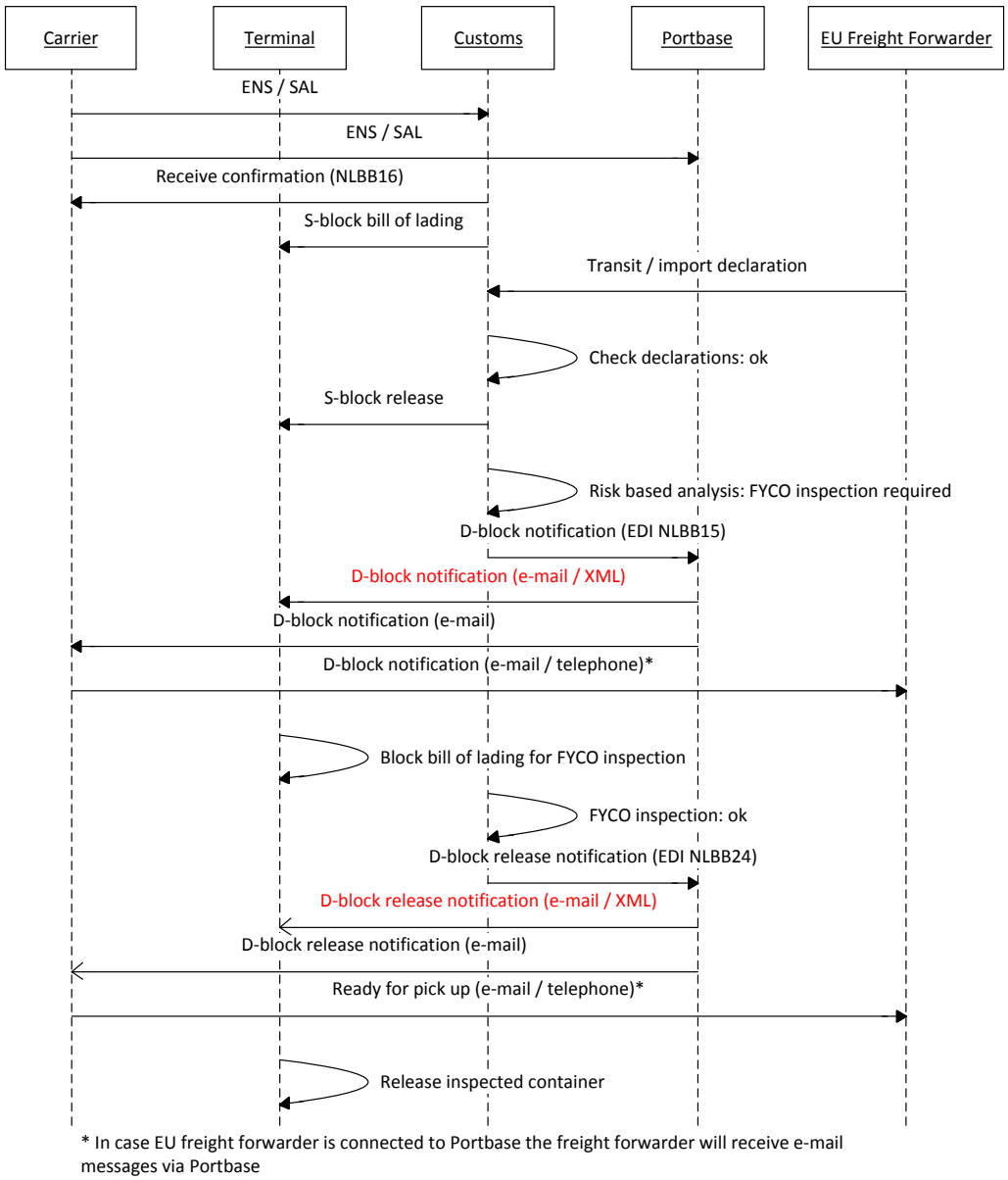

Figure 5: Container Release Sequence Diagram

4.3.4. Frugiventa case: issues

There are a number of issues that we identified in this case, as shown by the UML diagram of Figure 5. Each of these issues is only a minor concern, and a result of an innocent design choice made (and in most cases, made for very reasonable reasons). The combination of (some of) these issues, however, has a cascading effect that presents itself in the strong influence on the lead-times as observed by FrugiVenta.

Issue 1: Party not connected to Portbase

As shown best by the process description of section 3.1, parties that are not connect to a service as the one provided by Portbase have less timely information about the release of their containers. In ports

without the Portbase functionality (where Customs reports container targeting to the Carrier) or in the cases where the Importer (or Freight-forwarder on his/her behalf) is not connected to Portbase, the Importer or Forwarder has to rely on the Carrier to provide them with the actual arrival and release times.

If the Carrier outsources the message handling to a foreign country with different working hours, or if the messages are processed in batches, the information might arrive at inconvenient times, leading to delays in the (planning of the) on-carriage transportation.

The fact that Portbase, as a man-in-the-middle, can optimise the information exchange between Customs (public) and Carriers / Terminals / Freight-Forwarders (private), gives the Port of Rotterdam a clear benefit over ports without this functionality. Delays that would occur due to the way the Carrier handles the messages are no longer an issue.

Issue 2: Communication in non-automatable formats

In the case where Portbase is involved in the public to private communication, an issue still occurs in the way the messages are sent from Portbase to the various parties. Portbase receives the messages from Customs in EDI, which is automatically translated to an (internal) XML format. Portbase then provides both email and XML message services to communicate the container targeting (and release) notification messages from Customs. Messages received in XML can be automated, since the format (and thus content) can be machine-processed with ease; messages sent through email have to be handled by humans (no assumption can be made about their contents).

While some terminals receive the targeting notifications in XML, some others receive them via email. The messages that can be sent in either XML or by email are the following:[6]

- D-block notifications from Customs via Portbase to terminal;
- Notification which containers within a blocked bill of lading do not require inspection from customs to terminal;
- D-block release notification from customs via Portbase to terminal.

Since email communication requires manual follow-up action whereas XML enables automatic follow-up action, email communication can cause delays in case emails are not read and processed immediately after receipt.

[6] In case of system downtime at Customs, all messages to the Carriers / Terminals are done via email. This is, however, an exception rather than a rule (efforts are done to improve uptime to 99%), and Customs tries to plan messages around the downtime (if it is know when to happen).

Issue 3: Whole bills of lading are blocked

As part of the way the Customs targeting systems work, when containers are targeted for inspection (both via scan or physical control), the Customs system automatically blocks the whole bill of lading (B/L) of which the container is a part.[7] This can mean that containers that are not targeted for inspection still cannot be picked up for on-carriage (because they belong to a B/L of which a container is targeted).

When a FYCO is announced (manually by a Customs officer), the system also automatically blocks all the containers on the B/L (as per default). It is then up to the Customs officer to manually release the other containers of the B/L;[8] to allow Freight-forwarders to pickup those containers before the targeted container is inspected. This manual release is communicated to the Terminals by means of email(s).

Cascade: Unmanned terminals

The issues described above each have an effect on the lead-time of the containers. The combination of some of these issues, however, leads to a stronger effect on the lead-time than what would be expected by each issue individually.

The strong impact of these issues becomes more apparent in the (unconventional) case that the terminal is unmanned during weekends.[9] Not many terminals in the Port of Rotterdam have strict office opening hours, but the fact that using a terminal that is unmanned over weekends can have such enormous effects on the fluctuation of the lead-time of a container remains remarkable in this age of automation.

1. *Issue 1*: the Carrier transmits the SAL at 4:25PM,[10] and the NLBB15 is expected to be received before Friday 4:31PM, but is only checked (because of batching) at 5PM. The message to the terminal to block certain containers (and subsequently release all the others) would then be too late (given that the terminal office closes at 5PM), and therefore the terminal will keep **all containers from that vessel blocked** over the weekend.
2. *Issue 2*: Portbase communicates targeting notices to Terminals, but some of the Terminals receive this as an email message (by choice or by necessity). If it is possible that an email with targeting

[7] The system blocks a shipment rather than single containers. A shipment might consist of multiple containers.

[8] The other containers on the B/L are, of course, all automatically released when the targeted container is released (assuming no issues in that container). A single message (NLBB24) releases all the containers on the B/L (step 16 in Table 1 and Figure 5 above).

[9] While rare in Rotterdam, it is possible that container terminals close operations during the weekend. Here, however, we focus on terminals that, while operational, are unmanned (closed offices), relying fully on automated processes for the handling (retrieval) of containers during weekend days.

[10] The times mentioned here are for illustrative purposes only, they do not reflect actual times required for this issue to occur as the operations of the Carrier and the opening times of the Terminal can fluctuate from Carrier to Carrier and from Terminal to Terminal.

notices arrives after the terminal offices have closed, the terminal is again forced to keep **all the containers of the vessel blocked** until the email can be processed (after the weekend).

3. *Issue 3*: Same as with issue 2, but then only for the containers within the blocked B/L; the manual (email) release notices for the other containers on the B/L will only be processed after the weekend, resulting in the whole B/L being blocked for the weekend.

Note that due to the inability to automate the processing of the targeting messages, the terminal is forced to block all the containers from a single vessel. While it is to be expected that a container that is targeted for physical control has some delay,[11] it is problematic that all containers on a vessel with are blocked over the weekend because other containers from that vessel might require physical inspection. Especially for containers with perishable goods, these (unnecessary) delays are undesired for financial as well as product quality reasons.

4.3.5. Frugiventa case: solutions

The interesting fact of this case is that each of the issues mentioned before (with perhaps the exception of issue 3) can be solved rather easily, with only a minimal investment of the parties involved. In the following we will describe these potential solutions (but refrain from making assertions as to whom should invest in that solution). Moreover, it should be noted that FrugiVenta, as a representative of Importers, cannot be advised to use a single one of these solutions, as the situations might differ from one Importer to another.

- Issue 1: the solution here seems to be rather straightforward: connect everyone to a information platform that transmits public targeting/release information to all parties interested (Carriers, Terminals, Freight-forwarders). Other supply chains, where the weekends do not influence the lead-time of the containers, show that the communication optimisations provided by such an information platform can indeed optimise the supply chain and the planning of the on-carriage.
- Issue 2: the solution to the fact that emails cannot be processed automatically, and therefore might lead to delays can also be solved quite straightforwardly; use machine-readable messages instead. Why certain terminals receive the messages as emails instead of (automatable) XML, either has its reasons in the fact that the terminal does not have the IT capacities to automatically process XML messages, or because of historic reasons: the terminal did not have the capacity to process XML messages in the past, yet has not thought to change their subscription from the email service to the

[11] The handling of physical inspections, the steps to be taken, and minimizing the delays that these bring, are left out of scope of this example on purpose.

XML service. According to the pricing list of Portbase, there is no difference in cost for receiving the message as email or as XML.

- Issue 3: this is the hardest issue to solve. Due to the way Custom systems operate[12], it is necessary to block entire B/Ls when targeting single containers. The fact that Customs already tries to unblock every untargeted container on a blocked B/L is a step forward. If the communication of this unblocking could be automated (through the use of XML messages, for example), that would also provide a solution for this issue. One should note, however, that it might actually be advisable for Customs to block whole shipments, instead of individual containers; e.g., if Customs finds suspicious goods in a targeted container, they will want to inspect the other containers on the B/L as well.
- Unmanned terminals: a final, simple solution, to many of the issues mentioned in this report is to man terminals in weekends. This would circumvent any issues where human intervention (for instance in the processing of emails) would provide a solution.

The choice of which of these solutions (or all of them) would work best for the Port of Rotterdam, is a matter to be discussed by the various stakeholders involved in the supply chains. It seems that the solution to the first issue seems to have the most merit (regarding the solutions 2 and 4, one could also always choose to switch Terminals if the Terminal is unable to automate the process of containers or is willing to open offices in the weekends). In the following we will reflect on the merit of connecting every Freight-forwarder to a community platform, and whether the provision of services about up to date Carriers ETA/ATAs and Customs targeting messages, should be a community function.

[12] Customs systems are build on the premise that declarations are done for shipments; that a shipment can be spread over multiple containers (or that multiple shipments are contained in one container) is 'not visible' from the Customs system perspective. While the targeting software indicates containers as the aggregate level; the blocking has to happen on shipment level.

5

Findings from the cases

Having accurate information is important for ensuring that the supply chain functions optimally. Accurate information allows Freight-forwarders to minimise the delays incurred by inspections, and makes it possible to more precisely organise the on-carriage transportation. This can bring big (financial) advantages to the Importers, especially in the fruit chains, because of the perishable nature of the goods, but also in other supply chains will these advantages be noticed.

The community platform of the Port of Rotterdam offers this increased level of accurate information about import shipments by providing the "Lading informatie 2.0" service to Freight-forwarders. This service includes accurate information about, for instance, vessel arrivals (which is more accurate than the information Freight-forwarders typically get from the Carriers themselves) and container targeting. Regarding the latter, the only other source for information about whether their containers (shipments) are targeted for inspection by Customs would be from the Carrier.

Combining the various sources of information to provide more accurate ETA and ATA and container targeting information also, perhaps indirectly, benefits the Carriers (and Terminals). Without a service like "Lading informatie 2.0", Freight-forwarders would contact the Carriers to ask questions about the location of their container, possible delays, information about Customs scans, etc. The amount of questions (often via telephone) quickly becomes very large, an interviewee indicated up to hundreds of calls per hour. The costs for running a call centre to handle each and everyone of these calls are rather high, compared to the number of people needed to handle the calls now (with "Lading informatie 2.0" in place).

As there are multiple parties benefitting from a service such as this, it is sensible that each of the parties contributes to the costs of running this service. The cost for the service is therefore calculated for

each of these parties (Freight-forwarders, Carriers, Terminals).[13] Also, not every party benefits equally from each of the services of the community platform, and it makes sense to calculate the cost based on how much each party would save/earn when using that service (cost pro rata).

The "Lading informatie 2.0" service, however, uses a single cost model, where Freight-forwarders are required to pay a monthly fee as well as a transaction fee per bill of lading. Other services differentiate between small users and large users, allowing one to choose between either paying only a transaction fee (though typically two to three times higher than the standard transaction fee), or paying a monthly fee and a (lower) transaction fee (subscription model). Larger Freight-forwarders, Carriers and Terminals, naturally select the subscription model, as it saves them money, yet having the per-transaction model allows smaller players to enjoy the services as well.

The fact that "Lading informatie 2.0" only has a subscription model makes it difficult for smaller Freight-forwarders to justify the costs of using the service. Assuming that the transaction fee of a per-transaction model would be between two and three times as high as the transaction fee in the subscription model, a Freight-forwarder would have to import 60-120 B/Ls each month to earn back the subscription fee. For smaller Freight-forwarders (with less than 60 shipments per month), the consideration would then be whether the cost of paying for this service would earn them enough in minimising the delays; that is, would the costs of the (typical) delays incurred that can now be avoided be enough to pay for the costs of using the "Lading informatie 2.0" service.

From a community perspective, it is important to look at the consequences of this pricing model to the community as a whole. If it is deemed necessary to have a service as "Lading informatie 2.0", because it enhances port operations and reduces delays (and costs) for everyone (because, for instance, there are less trucks at the same time waiting to pickup the containers), then it should be considered, by the community as a whole, whether smaller Freight-forwarders should benefit from the service as well; that is, with a pricing model that would suit their business and size.

Many value-added services require that combinations of data from multiple sources be made, with often one or more stakeholders that (more) directly benefit from these functionalities, but do require others to contribute (but benefit less or not). For all services that the PCS offers, they make a business case. This business case includes the costs and the parties that play a role in the services (e.g. businesses that benefit

[13] Carriers and Terminals might not contribute directly by paying for the "Lading informatie 2.0" service, but they pay for other services such as "Loslijst" and "Melding Lading Import", where information needed for the "Lading informatie 2.0" service is shared. Without Carriers and Terminals using (and thus paying for) these other services, it would be impossible to provide the "Lading informatie 2.0" service.

from the service or are necessary to realise the overall service). Those parties that have to fulfil a (mandatory) role to make the service work, do not pay. Consequently, the parties that benefit from the service need to pay for the service. However, the fees that the PCS charges for services do not cover all expenses. Currently, the port authorities fund roughly two-thirds of it. As these stakeholders seek to realise savings on their contribution, eventually the income from the services needs to cover for those savings.

When combining these findings that follow from the FrugiVenta case with the data flows we found in the export processes and value-added services, we see that a PCS adds value to the community as a whole, and specifically in the interactions with government. The export and import processes show that the community functionality of the PCS is needed for the businesses involved in trade via the port for efficient operations and information exchange, also to government agencies. For declarations to government agencies, combinations of data from various parties need to be made. This is one of the core functions of the PCS and our analysis shows how this kind of core functionality generates a steady stream of key data, both public and private, that are necessary to make the various value-added services that we described possible. Our mapping shows how a PCS plays an important community role in the sharing of data; the PCS combines data from the actors in supply chains and the port and shares that data with government, thereby reduces the number of individual links between public and private organisations. Ideally, such a PCS connects to a government single window, which then relays the data to the appropriate public organisations.

In its community role, an important function of the PCS for businesses is the facility to share data electronically with Customs. Government does not oblige businesses to file declarations through the PCS, but the PCS sees its number of users and the number of messages increasing. According to our PCS interviewees, it plays a role in most of the data exchange between businesses and government in the Port, primarily because businesses benefit from this service. The electronic exchange of data reduces the administrative burden, and saves operational costs (e.g. on personnel and couriers). The PCSs revenue currently comes from subscriptions and a fee-per-message method. The core community services are funded through general funds of the shareholders, which still provide most of the funds for PCS (roughly 67% in 2010). The shareholders of the PCS under study are two Port Authorities.

Connecting businesses with customs is one of the most important services of the PCS. For this message exchange, customs does not pay for these services, as there is a legal obligation for the partners in the logistic chain to deliver declarations and information to customs and to inform the next partner in the logistic chain ("*Handshake Principle*", art. 796 quinquies TCDW). However, customs argues that functionality related to customs declarations provides a PCS with a critical mass of users, which is also

necessary for the other services that a PCS offers to the port community. Apart from the contribution of the shareholders, the main source of income (32% in 2010) comes from the fees that users (the businesses) pay for services.

The NLIP/ESW is positioned as a platform that can offer a variety of services to a variety of communities and organisations. Given the developments that PCSs face (see the background), these services are also needed to generate business and revenue models for the parties operating parts of the NLIP/ESW, such as a PCS. However, the value added services that will have to be the basis for those revenue models are partially made possible by the core data stream that a PCS gets from its community functionality. This approach leads to tensions coming from the role of a PCS as custodian of data that feed public functionality (i.e. the data exchanged between the business community and government through the PCS) in a port, and a role as a provider of a NLIP/ESW component that also aims to offer business services to the business community. These two roles can sometimes create tensions, because of the different interests of PCS users.

The service provider (e.g. a PCS) requires permission by the data owners (businesses) to re-use the data for value-added services provided to the businesses (often also the owners of the data). If others perceive this as a competitive challenge or misuse of the data provided for other purposes, this might reduce their willingness to share their data, and potentially undermine the role of PCS in sharing information within the business community and towards government, which could harm the competitive position of the overall port and port community.

From this, we learn that NLIP/ESW will need to offer processes or a structure for decision making on which functionalities are permissible and which data may be used for them. Specifically for the PCS, an important question is to what extent data that have been provided for community functionality can be re-used for value-added services. This is also related to the issue of data ownership and any rights or permissions a custodian of data may have. The Frugiventa case also clearly shows the importance of clear decision structures for cost/benefit distribution. Even though the PCS in our study does include the stakeholders in those decisions, the businesses do not always perceive it in that way and appear unable or unwilling to look beyond the costs of the PCS. When considering bigger and more diverse communities, as will be the case in NLIP/ESW, this problem will only grow and a standing structure is required that is able to make transparent decisions on the finance structure of the system as a whole (especially which services are considered community functionality of NLIP/ESW and how those should be funded) and of individual services that need to be decided on at the community-level (e.g. how are costs and/or benefits distributed among parties that are involved in the service).

6

Governance of ESW

6.1. The NLIP governance design

It is important to get a clear sketch of the lines demarcating responsibilities, ownership, functionalities, revenue streams, etc. Important is to identify which parts are considered core infrastructure and services, and whether components thereof are governed by the government, a neutral provider, a public-private collaboration, a business community system, or are left to the market. The issue of governance has not been ignored in NLIP/ESW. The debate on the governance structure of the NLIP was directly linked with the technical set-up of the platform. In the current situation, businesses can provide data to an electronic government postbox directly, or use the PCS for this. Should the NLIP become a mandatory platform for at least the reporting to government by the business community, this would ensure the core stream of data on which the value added apps can be based.

The platform information is of vital importance for all parties involved, especially in the struggle between community and business use of the data in apps, e.g. for data enrichment such as advanced planning software. Therefore, in the governance advisory committee, it was discussed that databases be part of the core of the NLIP platform. In that design, the NLIP platform contains databases, authorization, single sign-on and translation facilities. The NLIP platform is thus an ICT infrastructure, where the databases of the PCSs are connected to each other and to government databases. The functionality (apps) is separate from this infrastructure. The discussion on the governance arrangement focused on determining which parts need a governance or decision-making body and how these parts will be governed.

The outcome of the debate is that there would be a separation between a decentralised infrastructure (for exchange of data and messages) and value-added apps. The existing infrastructure and databases will remain part of the organisations that they are currently part of. An alternative option that was explored was

to bring the central part of the NLIP to neutral entities. This was rejected, as the databases would then no longer belong to anyone, which would require that existing parts would have to be rebuilt, which would take a lot of time and resources.

To safeguard the neutrality of the core infrastructure, within the NLIP programme a governance board was proposed to accompany the infrastructure. This governance board would make the decisions related to the NLIP and consists of all stakeholders. As there are many businesses, business federations represent those stakeholder groups. Furthermore, businesses like the terminal operators, the existing PCSs, and the relevant government agencies would be part of the board. Currently, NLIP has two bodies: a sounding board and a steering committee. The steering committee makes decisions based on proposals or feedback from the sounding board. This board would make decisions on:

- Acceptance of apps; e.g. government cannot accept apps that provide government risk targeting information to businesses, business federations will not accept apps that will automatically sanction businesses based on the data that are available in the NLIP (e.g. speeding fines based on data from mandatory car navigation systems);
- Standards; the NLIP has to (to a certain extent) be able to deal with widely accepted standards, including WCO, UN/CEFACT, GS1, ISO, RosettaNet (for the electronics industry), ODETTE (automotive industry), etc. On the one hand, there cannot be too many of them as that would make the translator functionality too difficult, but too few would exclude major industry sectors from using their standards for connecting the NLIP. The NLIP has a two-way role in aligning with these de facto standards, which requires careful balancing. On the one hand the NLIP has to identify and monitor the development of these standards. On the other hand, the NLIP should play an active role in shaping these standards, to guarantee that they do not diverge from the standards that are use in the community of their own business community;
- Costs and pricing; a proposed scenario is that access to the core is free of charge (i.e. if a party wants to use the NLIP only to exchange data with the government postbox). In that scenario, basic community functionality (like the PCS currently provides) will be available at cost price. Additional functionality for a higher (commercial) fee can also be developed, but the governance board determines what is acceptable.

Of the topics addressed in the proposed governance design for NLIP, setting the costs and (fair) prices will be one of the most difficult tasks, as it needs to strike a balance of being acceptable to the businesses community present in the governance board and also needs to be at a level that the components of the NLIP can survive economically. In this model, the parts of the PCSs that are part of the NLIP become vital

infrastructure and thus needs to be guaranteed. As a major PCS is currently needs structural extra funding from its stakeholders, the governance board also has to decide how to deal with this. The business stakeholders will have to decide which functionality offers added value to them and how they are going to help sustain this functionality. This could mean that the pricing of this functionality is set higher.

6.2. Analysis of the NLIP governance design

Even though formally some structured form of governance of NLIP/ESW exists in the form of the governance board, the actual realisation of NLIP/ESW is running behind schedule. Although this is also related to the technical complexity of the matter, the inability to make authoritative decisions on the long term direction of NLIP/ESW is a major barrier to making NLIP/ESW successful. Therefore, in this final part of the report, we dig deeper into the issue of governance and present a number of options. For this, we draw on two sources: 1) the research presented in this report, and 2) an analysis and advice on the governance of the public transport card in the Netherlands, commissioned by Commissie Meijdam (Veeneman et al., 2011). Although the technical complexity and subject matter of the transport card (a Dutch public transport card used by travellers for all means of public transport) is quite different from NLIP/ESW, the actor-complexity which is addressed in the governance shows similarities. In both cases, the national government keeps its distance but do have a few powerful instruments at their disposal, there are multiple authorities on other levels involved, there are organisations that are close to (but not quite) government and there are organisations that are purely private. Therefore, the considerations underlying the advice (if not the outcomes), offer insights for the governance of NLIP/ESW as well.

For the public transport card, like for NLIP/ESW, the main question concerning governance was which "permanent structure offers powerful coordination and effective and efficient decision making on those topics […] that transcend the level of individual concessions" (Veeneman et al., 2011, p. 13). In answering this question, the researchers developed two governance models (ibid., but slightly adapted to fit NLIP/ESW):

- National Platform. The national platform is issue-driven; i.e. stakeholders can bring issues to the table to discuss them or put them up for a decision. The key stakeholder groups have representatives in the platform. They can bring issues to the table of which they think need to be discussed or decided on at the NLIP/ESW level (i.e. not on the level of individual actors or communities). The parties agree on the process for dealing with these issues (e.g. who should be involved in solving the issue or making the decision, and what is the timeline) and feed back the outcomes (first the process that was agreed upon and later the selected solution) to the various stakeholders. The national platform thus institutionalises the process but does have (much) authority

itself. The main advantage is that it brings a certain level of transparency and visibility of the NLIP/ESW level and the decisions related to that level. Furthermore, it defines a clear channel for raising and discussing issues. To strengthen this model, Veeneman et al. (2011) suggest that a *referee* could be added, that can offer (or impose) advice based on certain pre-agreed-upon criteria, which could provide an incentive to the stakeholders to come to a solution themselves (i.e. if they drag the issue, they risk that the referee comes into play and forces a decision). As this 'platform' structure has limited authority itself, it relies on authoritative individuals that are part of it (e.g. as a referee or representative).

- National Organisation. The national organisation is a standing organisation. Key actors come together and jointly make decisions (also content/technical) on those issues that transcend the level of individual actors. Hence, issues discussed here are the ones escalated from the federated to the central level. Parties that are not key stakeholders but do have an interest may be offered the right to advice on relevant matters. The national organisation has full authority on issues that transcend the lower levels and is therefore the place for alignment of interests of actors and the technical design. The national organisation really is an office with its own organisation and board. One of the questions following from this model that Veeneman et al. (2011) raise is what the position of such a national organisation is with respect to the solution providers of the technology components. This is also relevant for NLIP/ESW still under negotiation (and much further away from where it stands today), whereas the national platform model has been established already. A national organisation could even become legal owner of NLIP/ESW (although economic ownership will be another question, given the ownership structures of the existing platforms that make up the NLIP/ESW). For the transport card, Veeneman and colleagues (2011) advise that parties that want something, also pay for it (also governments). Shared wants are paid for by all involved.

The NLIP governance board seems to have the ambition to be a National Organisation, but the existing structure is much closer to a National Platform (without a referee). The current governance of NLIP/ESW is thus primarily focused on the processes and the main structure is that of a programme, aimed to align the processes that include multiple parties. The concept of a 'governance board' thus may sound like it is an institution, but the question is if it is sufficiently permanent and authoritative to really align the various processes and sub projects. Compared to a situation with a referee or even a 'national organisation', this is a relatively weak form of governance that relies on individual stakeholders and the respect and power of individuals.

Further complicating the NLIP/ESW situation is that it is designed to be formed out of existing systems. A third alternative form could therefore be that the various communities are each represented by their own platform. In this way, a layered system of platforms (at the governance level that is, not technical platforms, although they could be structured along the same lines) arises. In that case, the NLIP/ESW governance can be based on making a separation between domains and who has a say in issues therein. Potential domains (derived from Veeneman et al., 2011) are:

- Those issues that actors decide on themselves, for example what an actors does with their own data;
- Those issues that actors in principle could decide on themselves, but where the decisions are influenced by the decisions that other actors make and by what is technically possible. An example is the decision on which services are offered that are enabled by NLIP/ESW;
- Finally, everything that goes beyond what actors can decide on autonomously. They need to coordinate, as issues cannot be solved by individual actors (at least not effectively or efficiently). Examples include agreeing on fees, harmonisation, technology choices, standards etc. Not all parties need to be involved in all topics.

The models are designed to include the various stakeholders. However, the question of organising these models remains. For NLIP/ESW, there appear to be three main flavours: this could be driven and owned by government, it can be done as a public-private collaboration, or it could be split along the lines of the public/private barrier (i.e. having a business platform and a governance platform that are interoperable).

The current design of the PCS covered in this report, is that of a public-private collaboration. In that design, data are handed over to the PCS but are still owned by the individual actors submitting the data. This enables government to access the data, and enables the PCS to optimize port operations by enabling companies operating in the port to share data without losing control over it. The PCS's revenue currently comes from subscriptions and a fee-per-message method. The core community services are funded through general funds of the two PCS shareholders, which are public or semi-public organisations.

An outcome of our analysis of where a PCS adds value is that it does add value to the community as a whole, and specifically in the interactions with government. However, NLIP/ESW and especially international data pipelines are much more business oriented. To survive in that setting, a PCS will have to offer more, in the sense of more services, bigger scale, more parties, cleverer data combinations, etc. The ties to specific localised communities may not be enough for globally acting players to continue to prefer a PCS over business solutions. In the public-private structure of the PCS, the public component makes it difficult

for a PCS to focus on commercial services and compete with business pipeline solutions. Much of the data that would be the basis for those commercial services, are gotten because of the community role. When discussing re-using the data that is needed for this core functionality in order to provide additional services, this community or public role gets obscured and parties object to a growing role of the PCS. However, now that due to austerity the general funds of the PCS are decreasing, some kind of additional sources of income for the PCS are needed. Increasing the fees for their services is one of the few instruments they have, next to developing new (business) services based on the data they have. If businesses consider this to be misuse of data provided for compliance purposes they could move to building direct links between various actors (e.g. send electronic messages to customs systems directly), and if government agencies argue that a PCS is optional because direct data provisioning to e.g. customs is also possible, all of them risk that the core flow of data that the PCS bases its services on dries out. The consequence may be that cascading inefficiencies in operations due to suboptimal data exchange, lead to depriving the entire port community of the benefits, which might make the port less interesting for globally operating players. The total set of core functionalities is without a very clear beneficiary community (other than the government), but our study shows that they are needed to offer the services that makes the port community as a whole more efficient and attractive to trade. When developing an NLIP in which the government aims for a role in the background, the question is if such a platform would ultimately provide the core functionality, for which a business model is so hard to find. *This creates a tension that is not easily resolved. Ungoverned use of community functionality and the data that follows from that for business services may lead to a slippery slope; the barrier between community and commercial functionality and assets becomes vague and the fear is that community data will be used to make more than just enough money to cover all costs of the system. However, when depriving a PCS of the option to use their infrastructure and the data that they have in custody to offer value-added services, which is one of their few ways to make money, the PCS as one of the main building blocks (at least in the short to intermediate term) of ESW/NLIP may run into difficulty sustaining itself. Either way, whether because the source of data dries out (if a few key providers of data do not wish to contribute to the PCSs business services) or whether the source of funding dries out (if no new sources of revenue are found), without a solution to this tension, it will be very difficult to find a sustainable model for creating ESW/NLIP as a platform of existing community systems.*

Given the community role of a PCS, and the value that is created for government agencies, it could make sense to bring it under control and funding of the government, for example the port authority or the national government ICT service provider; both could charge other users (e.g. customs) a fee-per-transaction based on cost-price, or it could be funded by the government as common good, analogous to e.g. the road infrastructure. Some services that are of vital use to the port authority can be made mandatory (e.g.

hazardous goods), and the port authority can make decisions on the infrastructure, services, and investments. This can be paid for by general port funds that parties in the port pay, via subscriptions, via pay-per-message, or a combination of various models (which is how some PCSs currently charges for services).

The bigger role and funding by government, puts the government agencies in a stronger position, which should be used to press open standards to be used for the basis infrastructure and for connectivity with other systems and platforms, which can support open standards adoption in global data pipelines. The core services a PCS should take care of are the services considered key to the community (as determined by the port authority) or for the interaction between multiple business actors and government (data combinations as described in the example services, see §4.1), or for the combination with or feedback of government data (e.g. confirmation of exit, see §4.2).

Any added value services that are not considered core services could be part of a separate entity. Such a separate entity would not have community status and can thus be subject to competition of other actors. Insofar data from the PCS have to be used for this, the service provider has to agree on this with all data owners, and perhaps even compensate them for this use of their data. If parties comply with the same standard interfaces, it should also be possible to use this information infrastructure to create new functionalities based on direct B2B and platforms.

The greater involvement of government should then lead to creating public value by creating standardised interfaces that facilitates business value and can be used to query business systems by government. An alternative is to bring the PCS fully to the port authority as owner of infrastructure and services, which then also decides which services are mandatory for businesses in the port to use, and which are not. The various authorities can - potentially with other stakeholders - form a Council that decides on the governance questions raised in the case study findings in this report.

7

Conclusion

New data exchange solutions are often more oriented towards broader business communities than only the port area, in particular they take into account more complete supply chain perspectives and hinterland business issues. PCSs are community-oriented and often feature some kind of mixed public-private structure to improve the whole chain. The current community role gives them an important source-stream of data, which enables smart combinations that benefit parties in the port and the hinterland, and are especially important in relationship to community-to-government information exchange, i.e. for customs items such as import, export and transit. A key question is to what extent these data may be re-used to create new functionalities. However, to make the shift from single windows to Extended Single Windows (or to an NLIP, which also covers public and private components), exactly these questions need to be answered. Our study identifies key governance issues that have to be settled to establish an ESW, namely:

- To what extent can data that have been provided for community functionality be re-used for value-added services?
- Who owns which data?
- What are the rights or permissions of a custodian of data?
- What is the decision-making structure for cost/benefit distribution?
- What is the decision-making structure for the funding structure of the system?
- How should community functionality be funded?

In this report, partially by comparing how such issues are dealt with in the domain of the Dutch public transport card, we also proposed various types of governance institutions that could be used to realise the decision making process about these issues.

When considering bigger and more diverse communities, as will be the case in NLIP/ESW, these questions will only grow in importance and a standing structure is required that is able to make transparent

decisions on these and other matters. Our case analysis shows that even problems that appear to be operational in nature (like the problem of weekend delays in supply chains) are ultimately about making a decision on what the community wants to do at the community level, how, and how to pay for it.

The existing first steps towards a governance model for NLIP/ESW primarily concern governance as a process. In other words; to facilitate that the right people decide on how decisions are going to be made about combinations of public and private data. However, in this way many of those parties optimise for their own part of the operations, risking suboptimal decisions and configurations at the community (e.g. port community or supply chain) level. Small issues are easily resolved, but that does not solve that cascading issues lead to large costs for some parties. To make NLIP/ESW work, it is vital that the community jointly decides that certain services and level of service should be considered community functionality and therefore also community funded. This can also be a minimal level with large government support and leave the rest to the responsibility of the businesses. In any case, novel public-private governance models for decision-making should be further investigated.

A structure is needed to make decisions on these matters, in such a way that they are accepted by the community (transparency of the process and the decisions plays a role here). The current steps taken to address the governance issues in NLIP/ESW may not powerful enough to bring the innovation to success. Also stronger international collaboration between various national platforms and PCSs (for example via EPCSA) is required; if these platforms are to act as landing places for international data pipelines, these systems need to be fully able to exchange data and messages. If businesses would need to configure or implement a different connection for each national platform or building block thereof, that might inhibit their use of national platforms, which that would threaten the core stream of data also. The main conclusion is therefore that further structuring of the governance (i.e. decision-making processes and their institutional embodiment; both national and international) are necessary to be able to make next steps in the development of NLIP/ESW.

Acknowledgements

This research has been conducted as part of the project “Extended Single Window –Information Gateway to Europe: New Information and Governance Models for International Trade & Logistics”, funded by the Dutch Institute for Advanced Logistics (DINALOG).

Furthermore, parts of the final analysis, the comparisons with other domains and insights and conclusions that draw thereon, are supported by the "Governing public-private information infrastructures" research project, funded as a VENI Grant (451-13-020) by the Netherlands Organisation for Scientific Research (NWO).

Parts of the text in this report are also part of one of the following original articles:

Bharosa, N., Klievink, B., Janssen, M., & Tan, Y. (fortcoming). Shaping transformation through multi-sided platforms: the shared realization of public values and business goals. *Government Information Quarterly*.

Klievink, B., Aldewereld, H., & Tan, Y-H. (2014). Establishing Information Infrastructures for International Trade: Discussing the Role and Governance of Port-Community Systems. In *5th International Conference on Information Systems, Logistics and Supply Chain (ILS2014)*.

Klievink, B., Van Stijn, E., Hesketh, D., Aldewereld, H., Overbeek, S., Heijmann, F., & Tan, Y.-H. (2012). Enhancing Visibility in International Supply Chains: The Data Pipeline Concept. *International Journal of Electronic Government Research*, *8*(4).

Klievink, B., Janssen, M., & Tan, Y.-H. (2012). A Stakeholder Analysis of Business-to-Government Information Sharing: the Governance of a Public-Private Platform. *International Journal of Electronic Government Research*, *8*(4).

Klievink, B., Janssen, M., & Tan, Y.-H. (2012). Blurring public-private boundaries: governance of information sharing in global trade networks. *13th Annual International Conference on Digital Government Research (dg.o ’12)*. College Park, MD, USA: ACM.

References

Bharosa, N., Klievink, B., Janssen, M., & Tan, Y. (n.d.). Shaping transformation through multi-sided platforms: the shared realization of public values and business goals. *Government Information Quarterly*.

EPCSA. (2011). *How to develop a Port Community System*.

Hanseth, O., & Lyytinen, K. (2010). Design theory for dynamic complexity in information infrastructures: the case of building internet. *Journal of Information Technology*, *25*(1), 1–19. doi:10.1057/jit.2009.19

Hanseth, O., Monteiro, E., & Hatling, M. (1996). Developing information infrastructure: The tension between standardization and flexibility. *Science, Technology & Human Values*, *21*(4), 407–426.

Henningsson, S., & Henriksen, H. (2011). Inscription of behaviour and flexible interpretation in Information Infrastructures: The case of European e-Customs. *The Journal of Strategic Information …*, *20*(4), 355–372. doi:10.1016/j.jsis.2011.05.003

Hesketh, D. (2010). Weaknesses in the supply chain: who packed the box? *World Customs Journal*, *4*(2), 3–20.

Holloway, S. (2010). Measuring the effectiveness of border management: designing KPIs for outcomes. *World Customs Journal*, *4*(2), 37–54.

Keretho, S., & Pikart, M. (2013). *Trends for collaboration in international trade: building a common Single Window Environment*. Geneva.

Klievink, B., & Lucassen, I. (2013). Facilitating adoption of international information infrastructures: a Living Labs approach. In *Lecture Notes in Computer Science* (Vol. Proceeding). Koblenz, Germany.

Klievink, B., Van Stijn, E., Hesketh, D., Aldewereld, H., Overbeek, S., Heijmann, F., & Tan, Y.-H. (2012). Enhancing Visibility in International Supply Chains: The Data Pipeline Concept. *International Journal of Electronic Government Research*, *8*(4).

Kubicek, H., & Cimander, R. (2009). Three dimensions of organizational interoperability. Insights from recent studies for improving interoperability frame-works. *European Journal of ePractice*, 1–12. Retrieved from http://www.epractice.eu/files/6.1.pdf

Overbeek, S., Dignum, V., & Tan, Y. (n.d.). *Towards an Event-Driven Governance Architecture for Intelligent Control Scheduling*.

Romochkina, I. (2011). *Cluster Perspective on Inter-Organizational Information Systems*.

Tan, Y.-H., Bjørn-Andersen, N., Klein, S., & Rukanova, B. (2011). Accelerating Global Supply Chains with IT-Innovation. ITAIDE Tools and Methods. Berlin: Springer.

Tilson, D., Lyytinen, K., & Sørensen, C. (2010). Digital Infrastructures: The Missing IS Research Agenda. *Information Systems Research*, *21*(4), 748–759. doi:10.1287/isre.1100.0318

Van Baalen, P., Zuidwijk, R., & van Nunen, J. (2009). Port Inter-Organizational Information Systems: Capabilities to Service Global Supply Chains. *Foundations and Trends® in Technology, Information and Operations Management*. doi:10.1561/0200000008

Veeneman, W., Ten Heuvelhof, E. F., De Bruijn, J. A., & Saanen, N. (2011). *Naar een betere governance voor de OV-chipkaart*. Delft.

Yin, R. K. (2009). *Case Study Research: Design and Methods*. (L. Bickman & D. J. Rog, Eds.)*Applied Social Research Methods Series, Volume 5* (Fourth.). Thousand Oaks: Sage Publications.