project goal

by means of design, how can the architect contribute to make conversion projects more feasible on a large scale?

research

- design research
  - office architecture
  - building characteristics
  - typology of office vacancy
- conversion potential
  - difficulties
  - opportunities

concept / vision

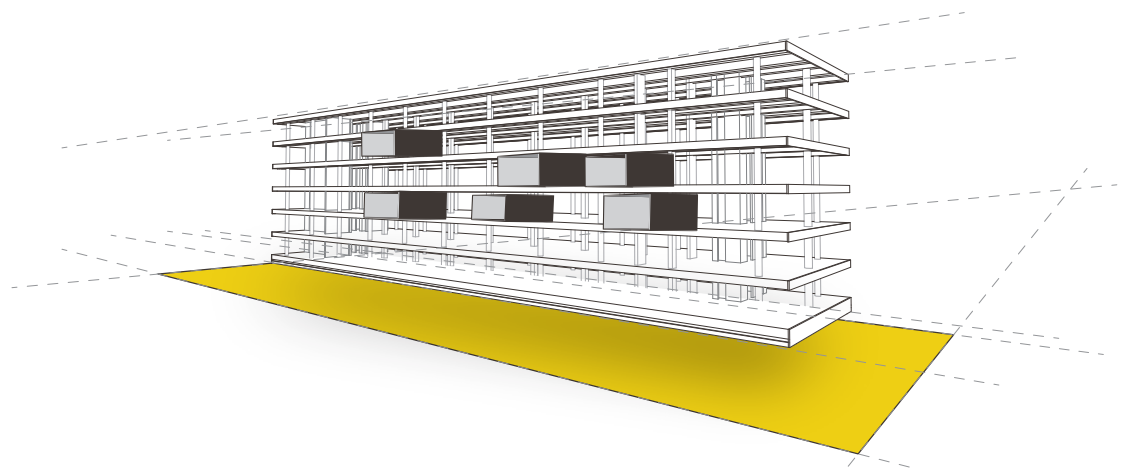

office structure as support for prefab

arguments

time efficient

cost efficient

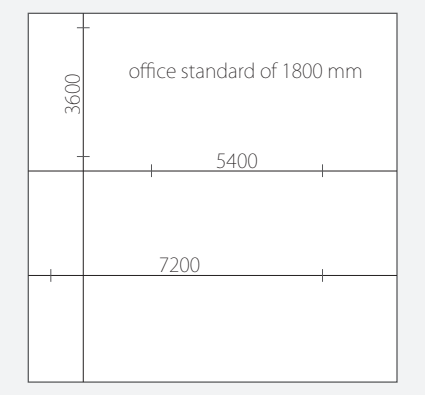

standard sizes

database research

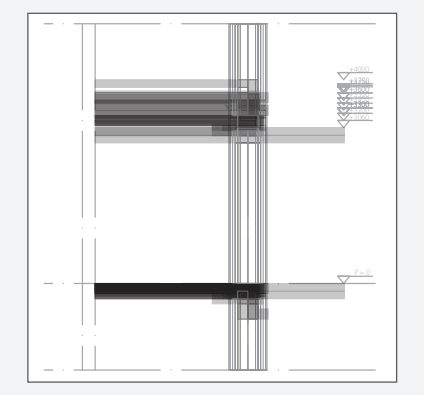

height clearance

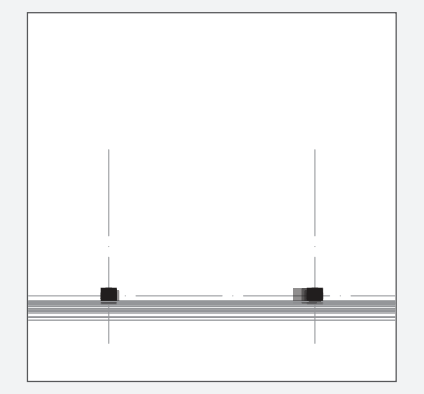

width clearance

16.5 %
total of 33 / 200 buildings
13 buildings - 5.4 m grid
20 buildings - 7.2 m grid

applicable

preconditions
vacant office building

A standard office dimensions

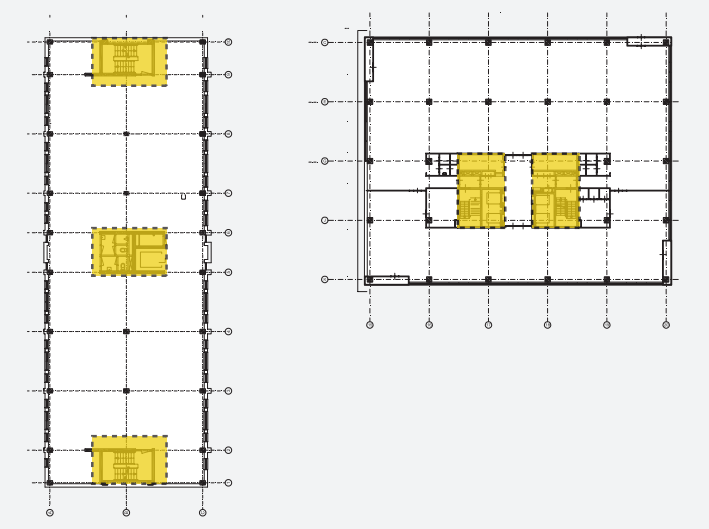

> grid size: 5.4 or 7.2 meter (basis: 1.8)
> rectangular shaped building

B non-structural façade

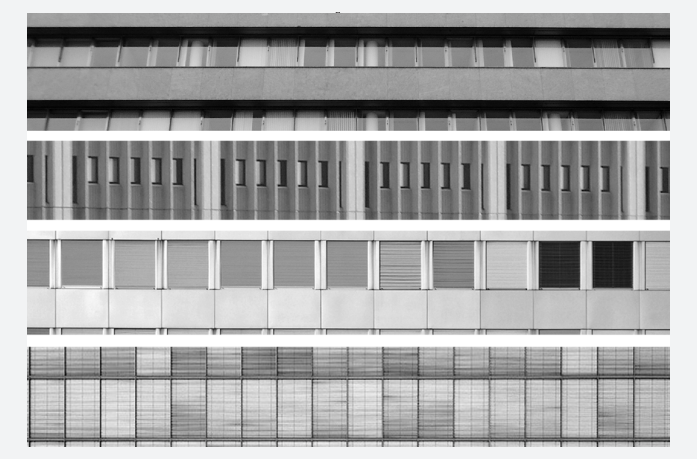

> building-physically outdated
> unattractive façade for converted function

C basic building structure

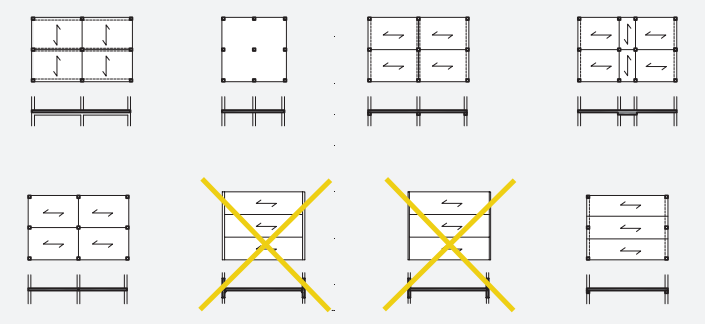

> load-bearing structure over-dimensioned (300-500 kg/m2)

D height clearance

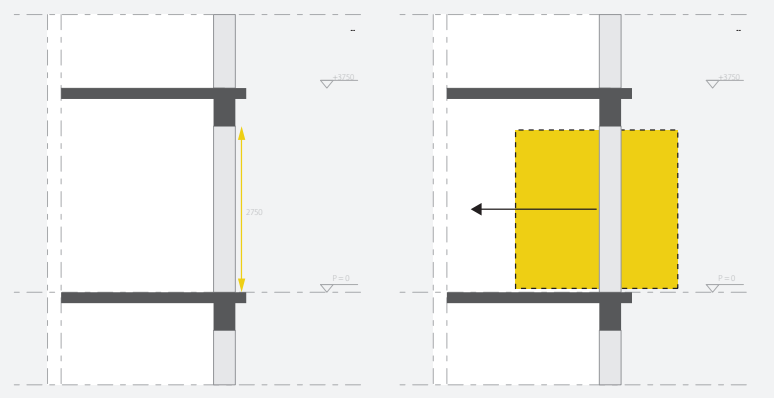

> height clearance (floor to ceiling) from outside building

requirements
converted building

A generate extra floor space

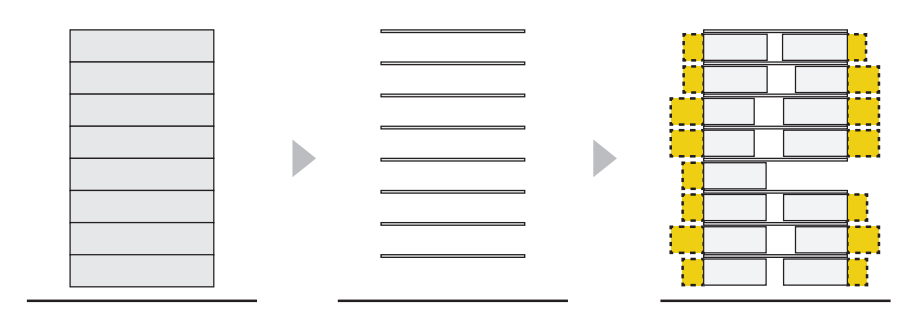

> cost effective (€ / m2 office > € / m2 housing)
> add balconies & outdoor spaces
> optimize views on surroundings

B minimize work on building

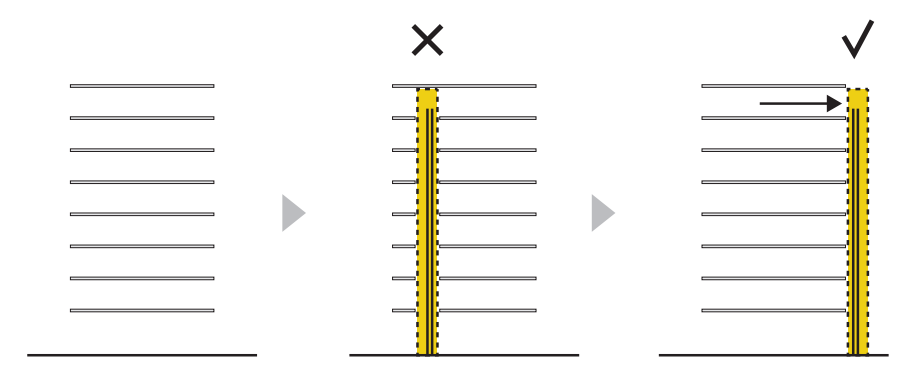

> leave building structure intact (as much as possible)

C mixed-use programming

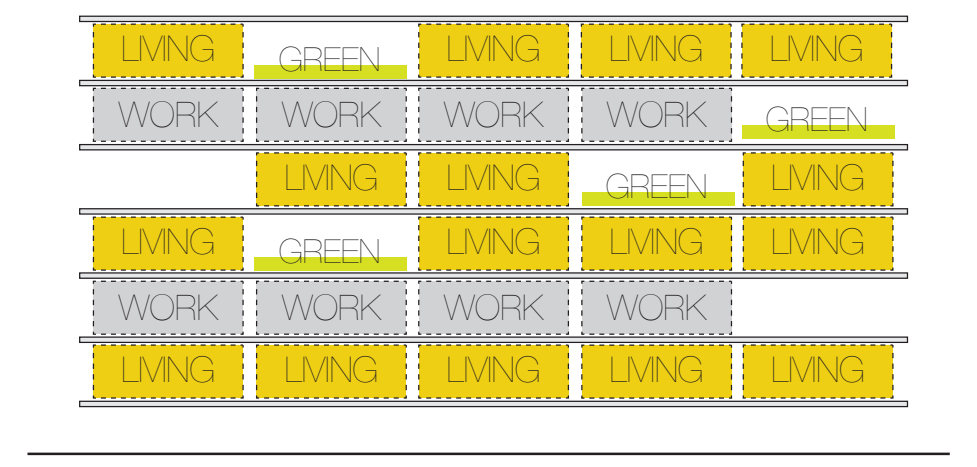

> work/living concept
> flexible unit design

D sustainability

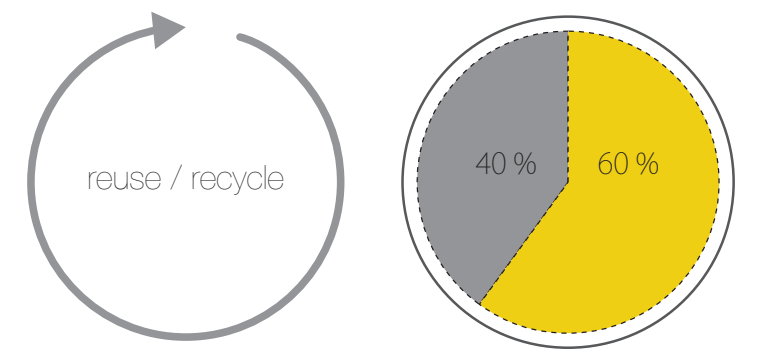

building structure

material preservation

> units are reusable and multi-deployable
> building structure can be used for years to come
> physical requirements easy maintainable in prefab
> optimize use of daylighting

design considerations
unit design

A positioning wet cells

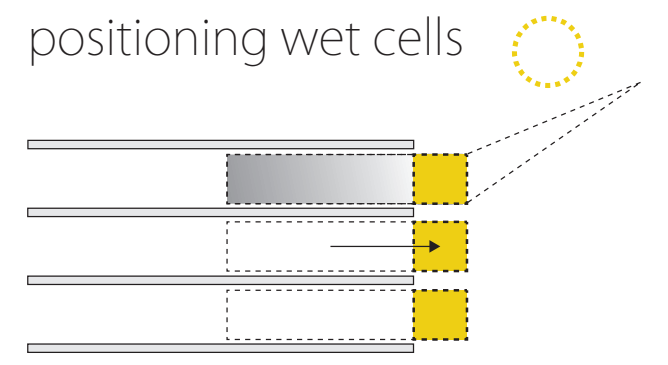

outside of building

+ more space inside building
- wet cell blocks natural lighting

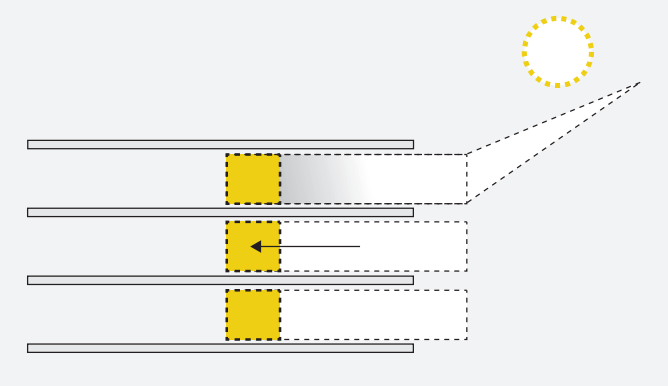

inside of building

+ optimize natural lighting
+ more space on outside of building

B positioning shafts

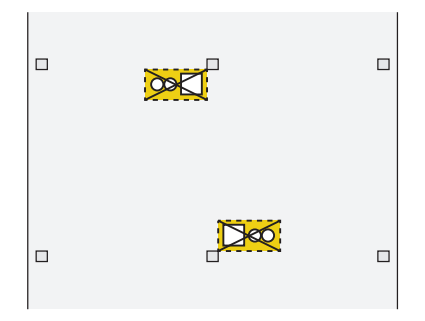

drill new holes

+ drains on inside of building
- custom work on building
- more permanent solution

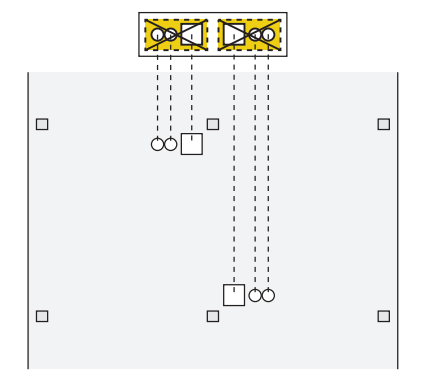

use existing shafts

+ use existing infrastructure
- custom work on building
- long distances for drains

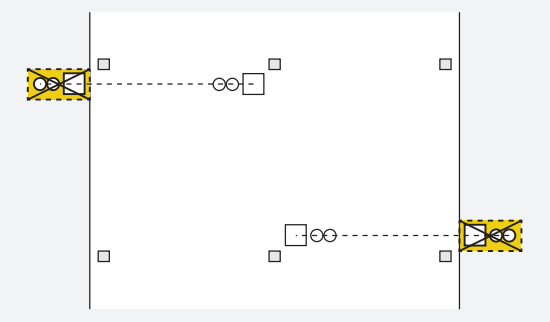

bring shaft to outside

+ no custom work on building
+ short distance for drains
- drains on outside of building

C new façade

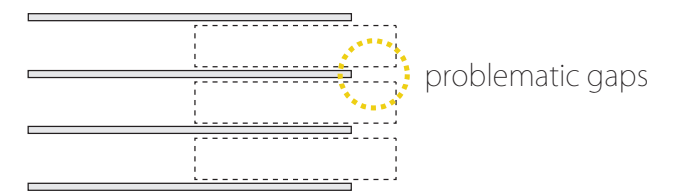

closed units

> problematic gaps (weather, water)

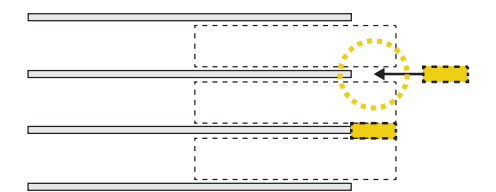

closed unit + add façade elements

> more work on façade

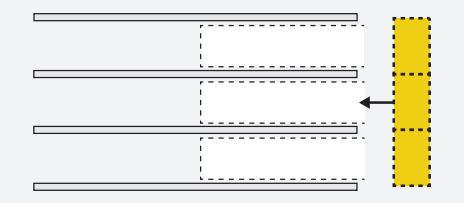

open unit + façade element

> systematic elements based on 1.8 m
> incooperating: shafts & extra floor space

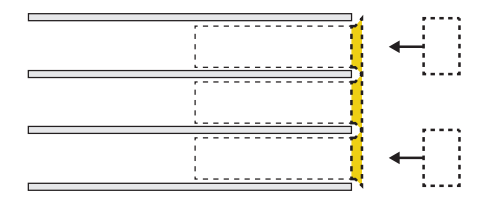

connection between units

> use margin for smart systematic element
> possibility for extensions (balcony ex.)

D linking units

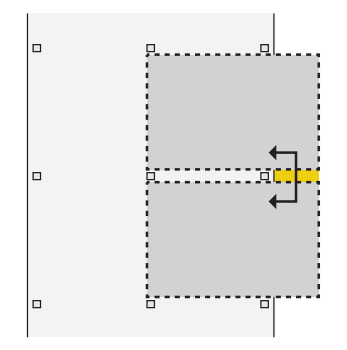

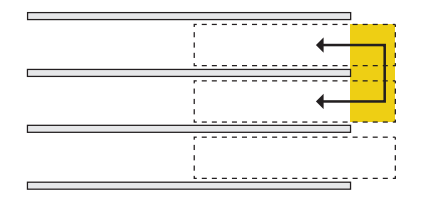

vertical connection possible

link units outside building

> best space is lost
> part of façade element?

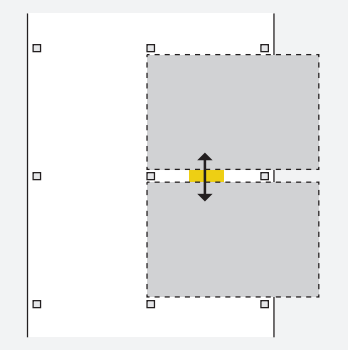

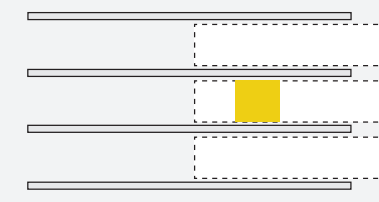

no vertical connection

link units inside building

> best space is kept
> building system must allow link

building process

E transportation

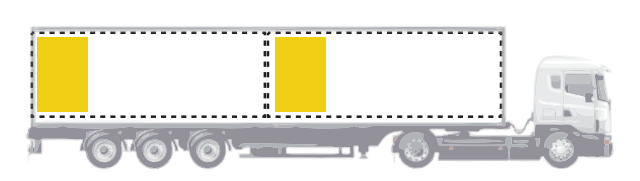

truck | transport entire prefab unit

> transport less space efficient
> entirely assembled in factory
> limited to truck dimensions

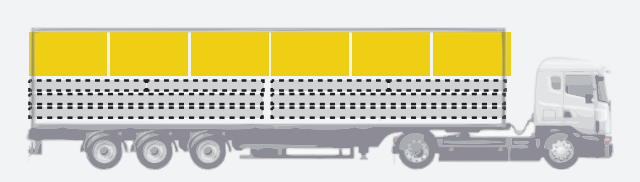

truck | transport prefab elements of unit

> space efficient transport
> further assembly on building site
> limited to truck dimensions
> elements can also be assembled in factory

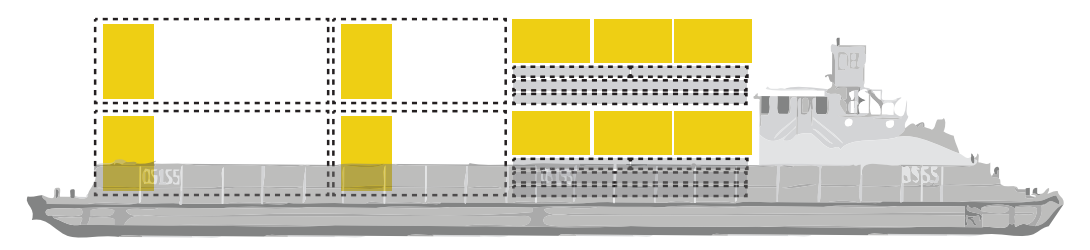

barge | transport entire prefab unit / elements

> less traffic movements needed
> transportation over water is location-specific
> less limitations in dimensions

F deployment on site

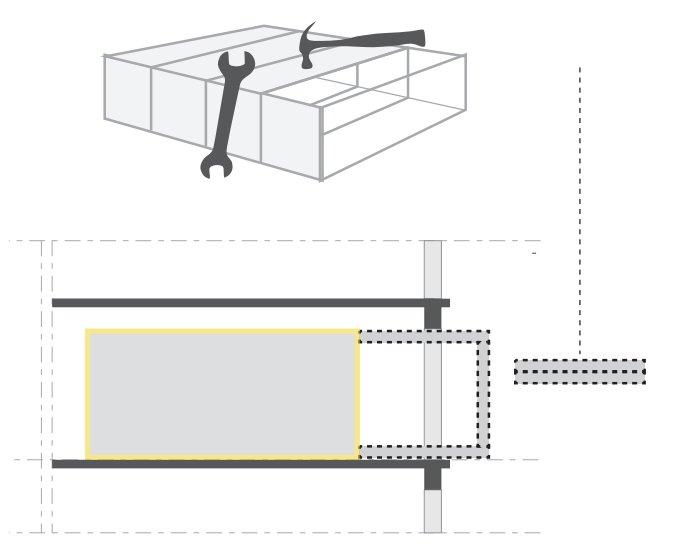

assembly in building

> no space to move large parts around
> time inefficient

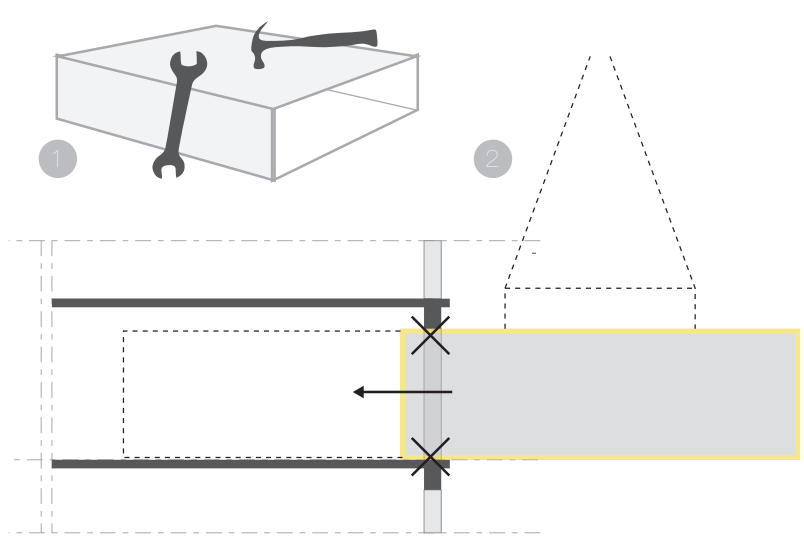

assembly in one piece on building site

> deployment in one hoist movement
> no space for error (horizontal movement not possible)

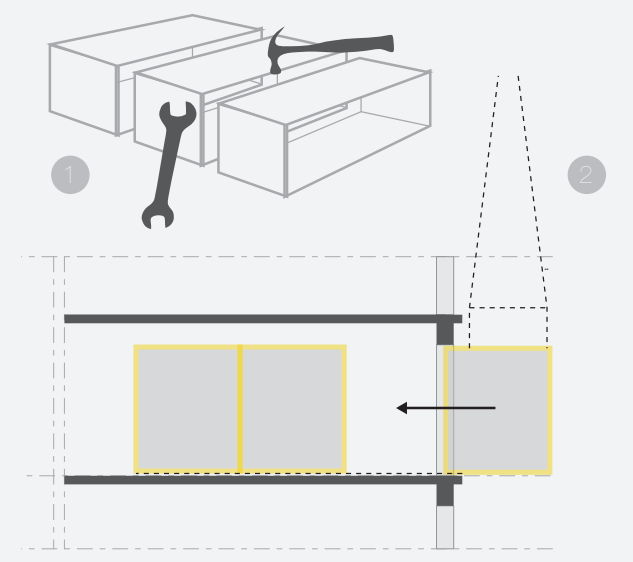

assembly in 'slices' on building site

> several hoist movements
> guidance needed from inside building

technical considerations
construction

A canterlevering units
without large interventions

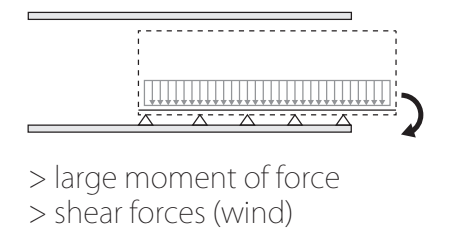

> large moment of force
> shear forces (wind)

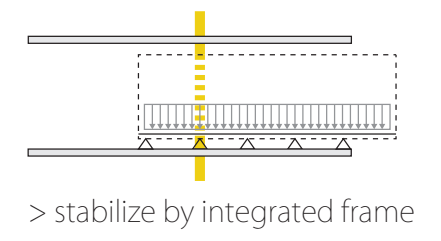

> stabilize by integrated frame

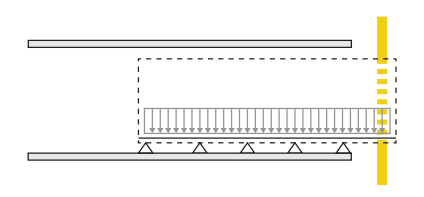

> load-bearing frame along façade

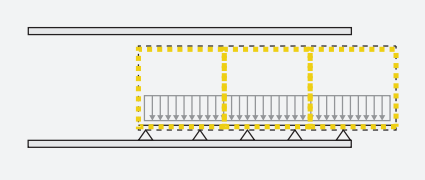

> self-bearing construction (in balance)

B securing to the building

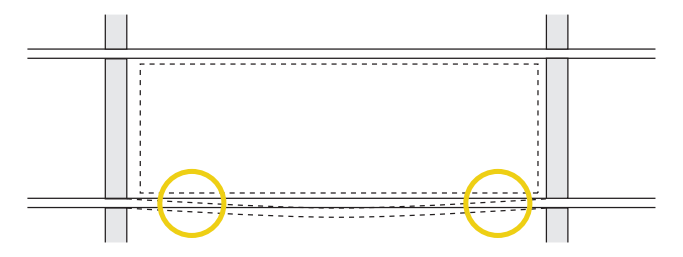

> rest on existing (hanging) office floor
> no abilility to adjust (for leveling)

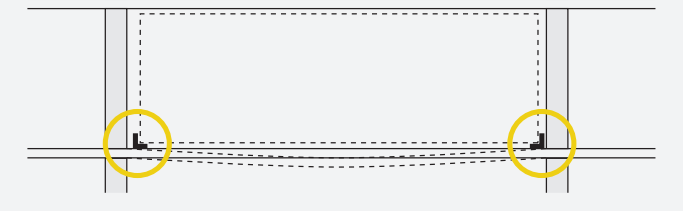

> guiding rail - close to columns
> abilility to adjust (for leveling)

C cold / warm construction

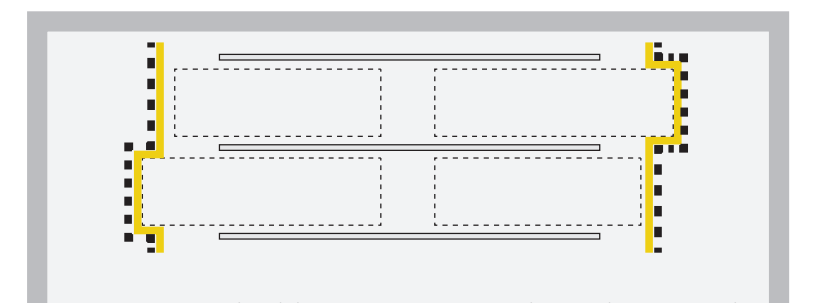

> warm building structure, insulation line outside

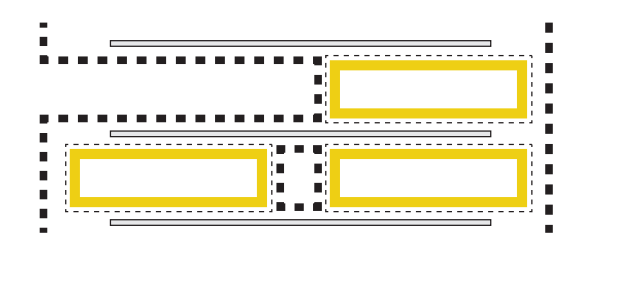

> cold building structure, insulation line inside

final conversion concept
in steps

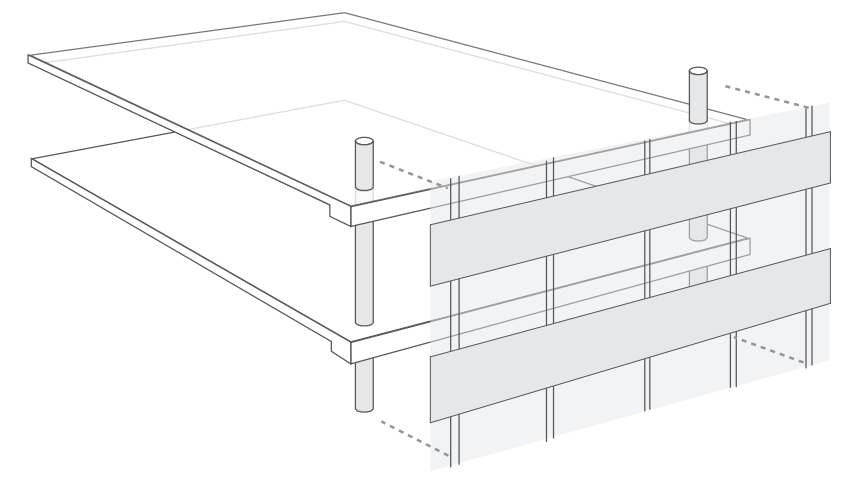

① strip office façade
materials can be recycled

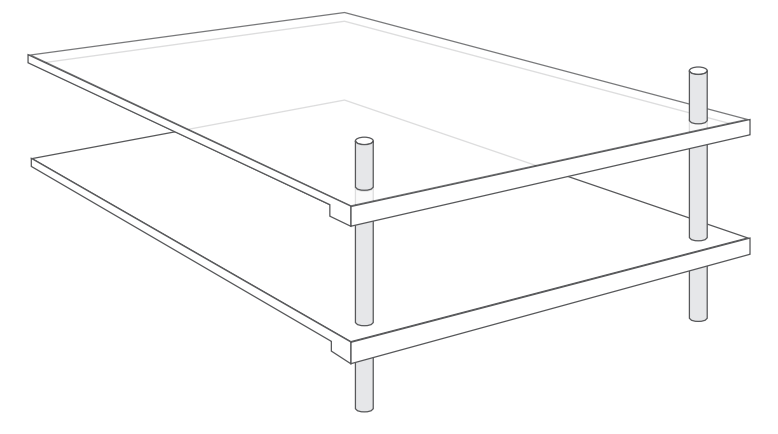

② prepare building structure

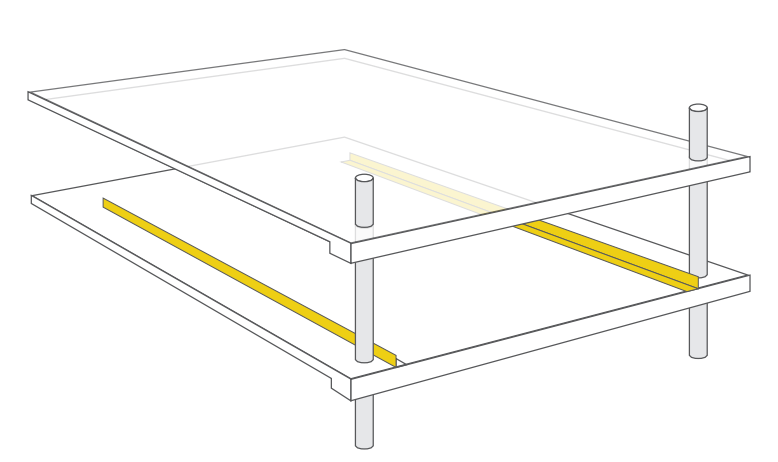

③ place (leveled) rails
adjust for leveling prefab units

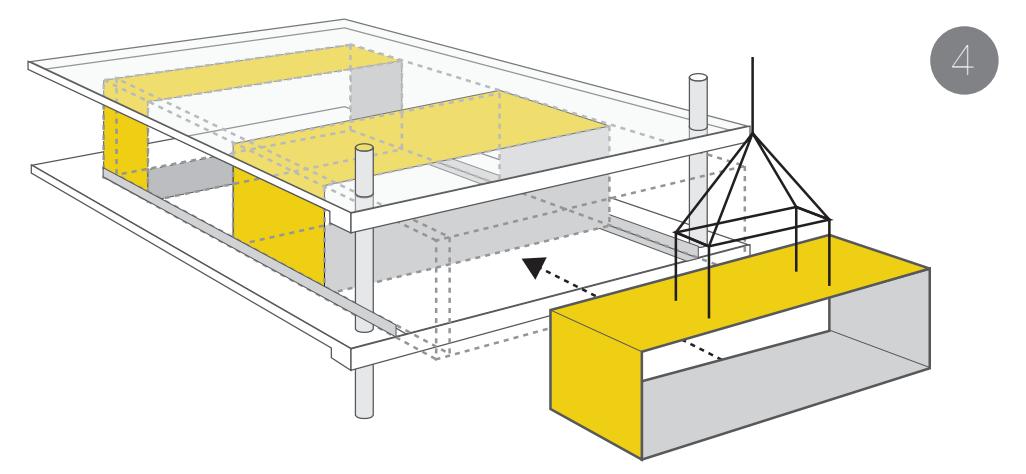

④ slide in prefab unit (in segments)
over steel rails with teflon (97% friction reduction)

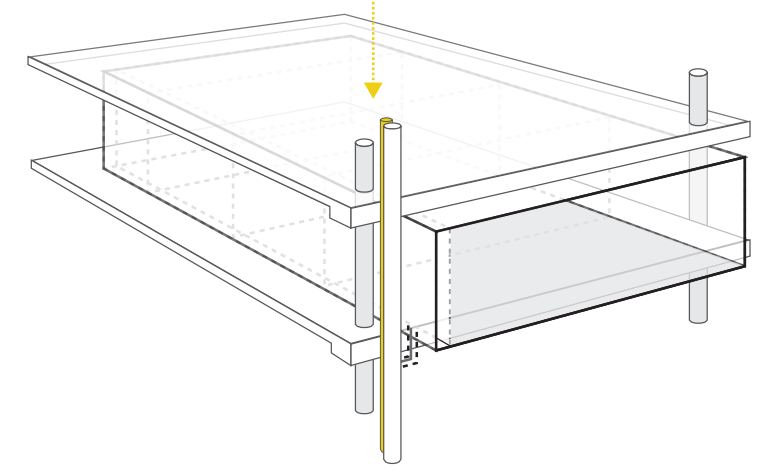

⑤ connect installations to shaft
no adjustments to the existing structure needed

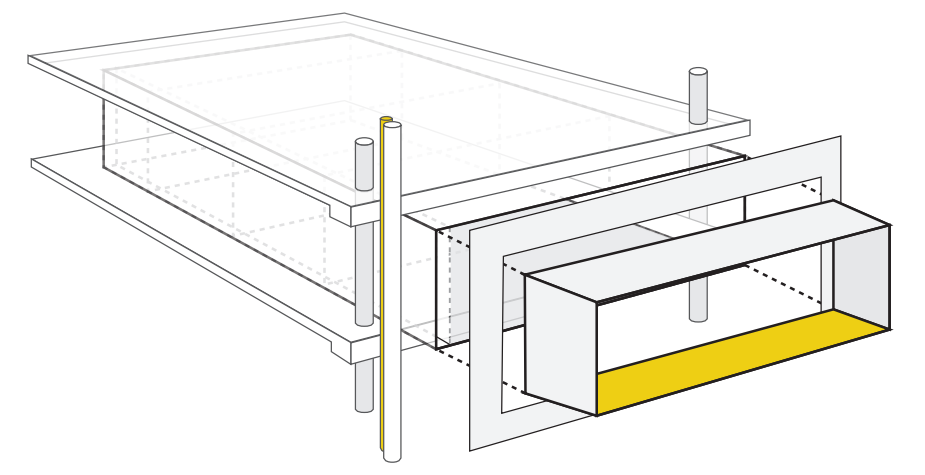

⑥ place façade-segment
new insulation line, shaft is closed off

designing within margins

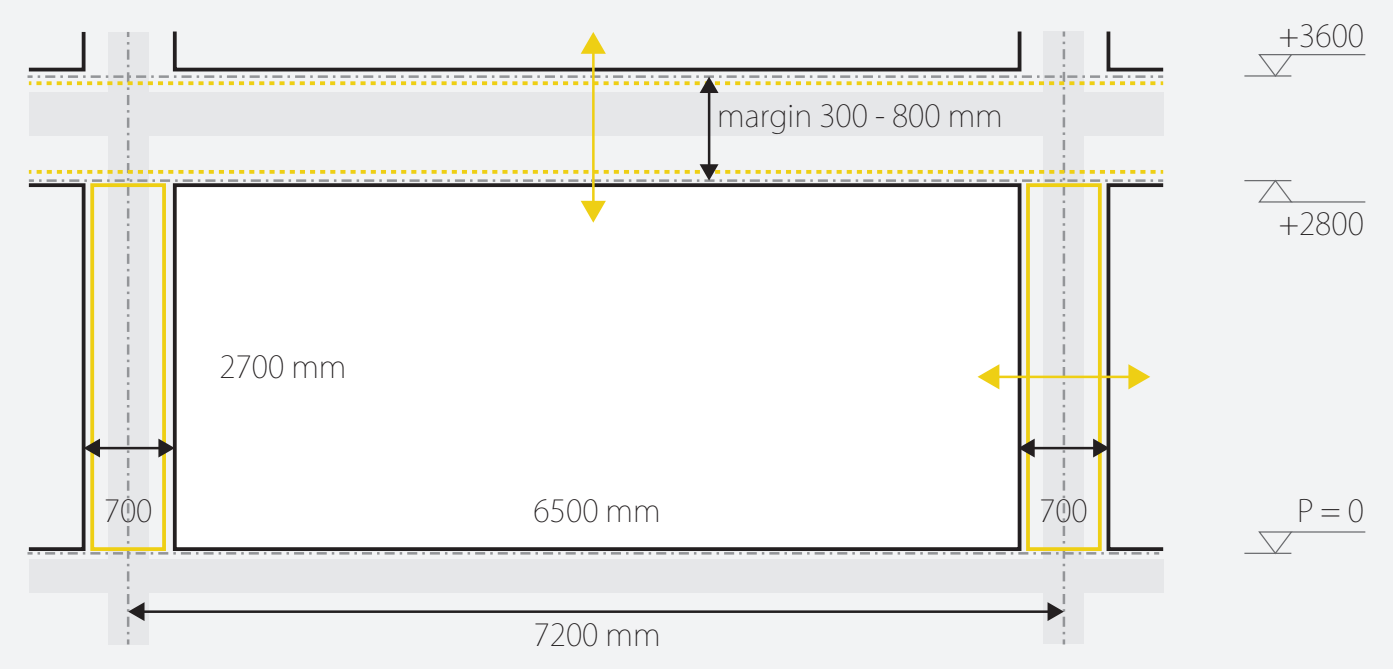

converting office space
using modular prefab architecture to convert vacant office buildings

MSc Architecture graduation project - ExploreLAB 2011-2012 | student F.P. Koornneef

instructors: ir. R.J. (Robert) Nottrot
ir. H.T. (Hilde) Remøy
ir. Y.J. (Ype) Cuperus

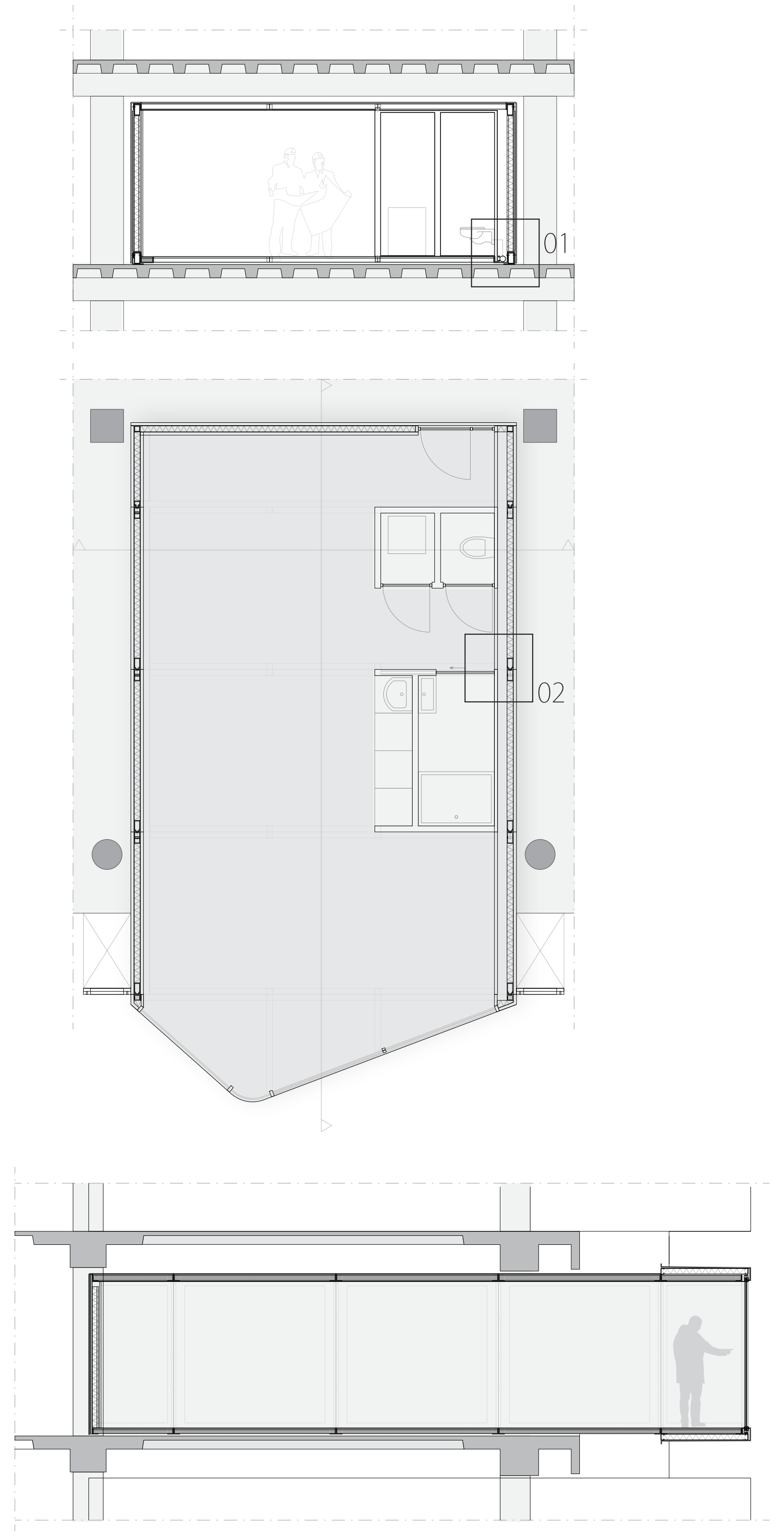

plan + cross sections | scale 1:50

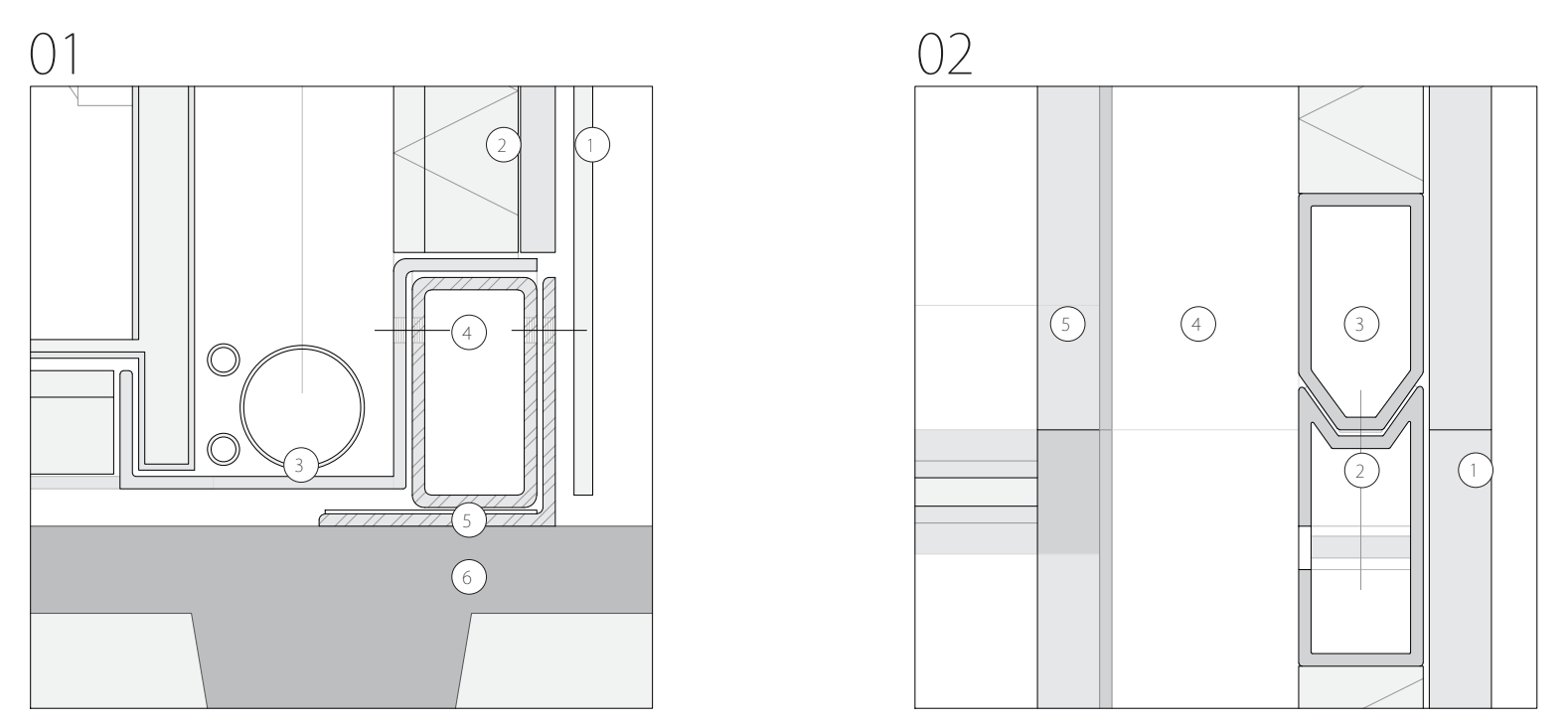

① composite skin (8 mm)
② sandwich panel (PU foam)
③ space for drains
④ steel frame (185 mm)
⑤ steel rails + teflon tape
⑥ existing concrete structure

① composite skin (8 mm)
② sandwich panel (PU foam)
③ steel frame (185 mm) + insulation
④ space for drains
⑤ wall element (50 mm)

details | scale 1:5

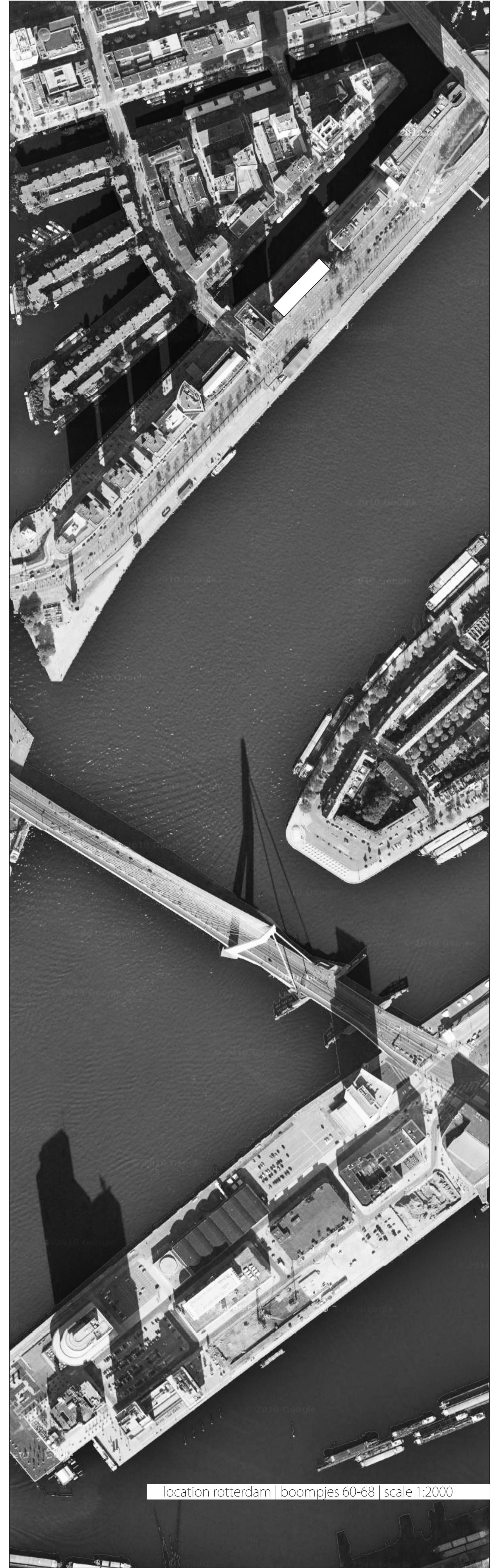

location rotterdam | boompjes 60-68 | scale 1:2000

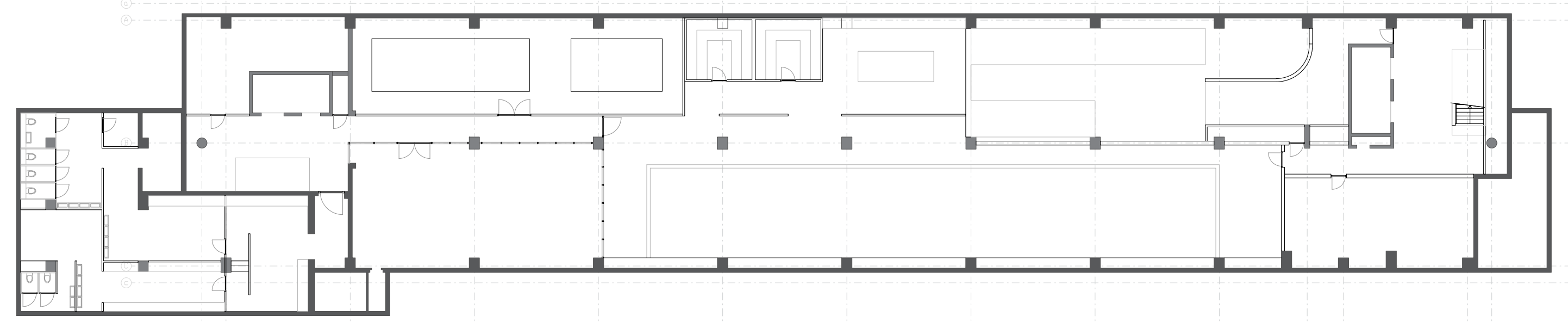

basement plan | - 6150 | scale 1:200

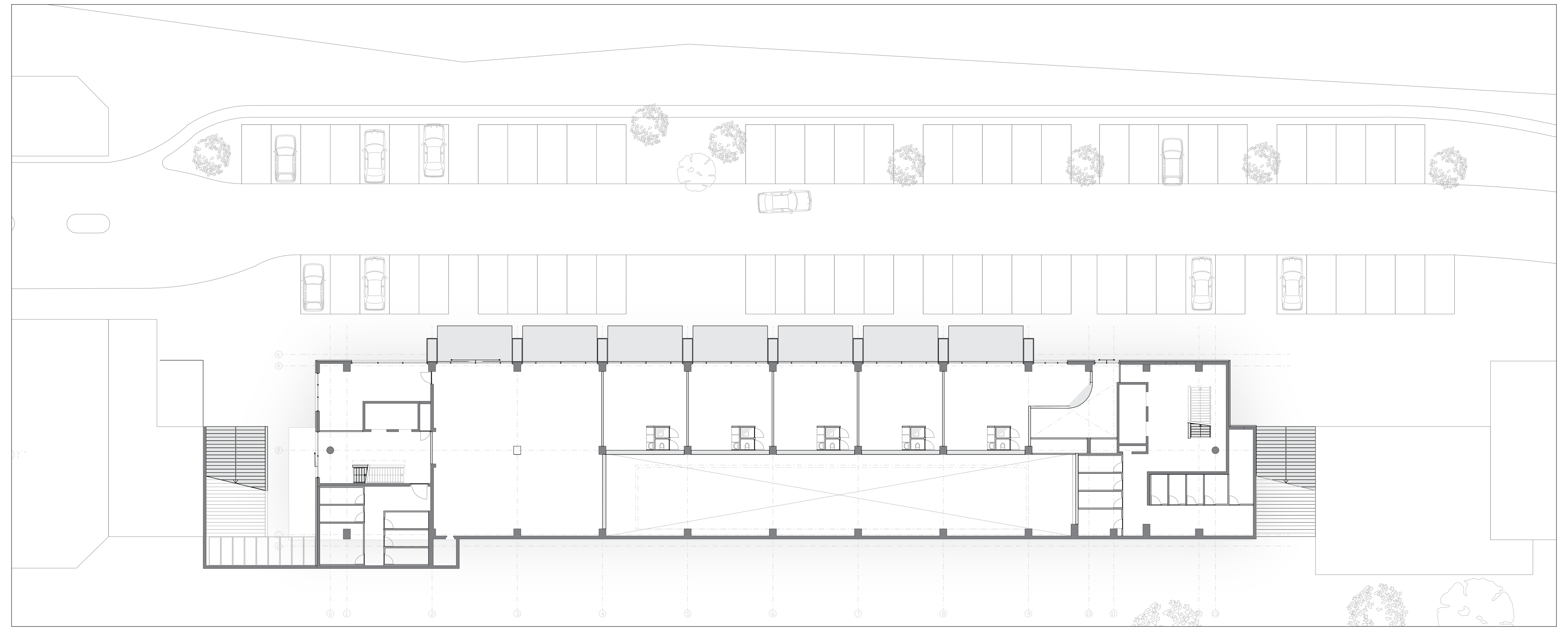

level hertekade | -3400 | scale 1:200

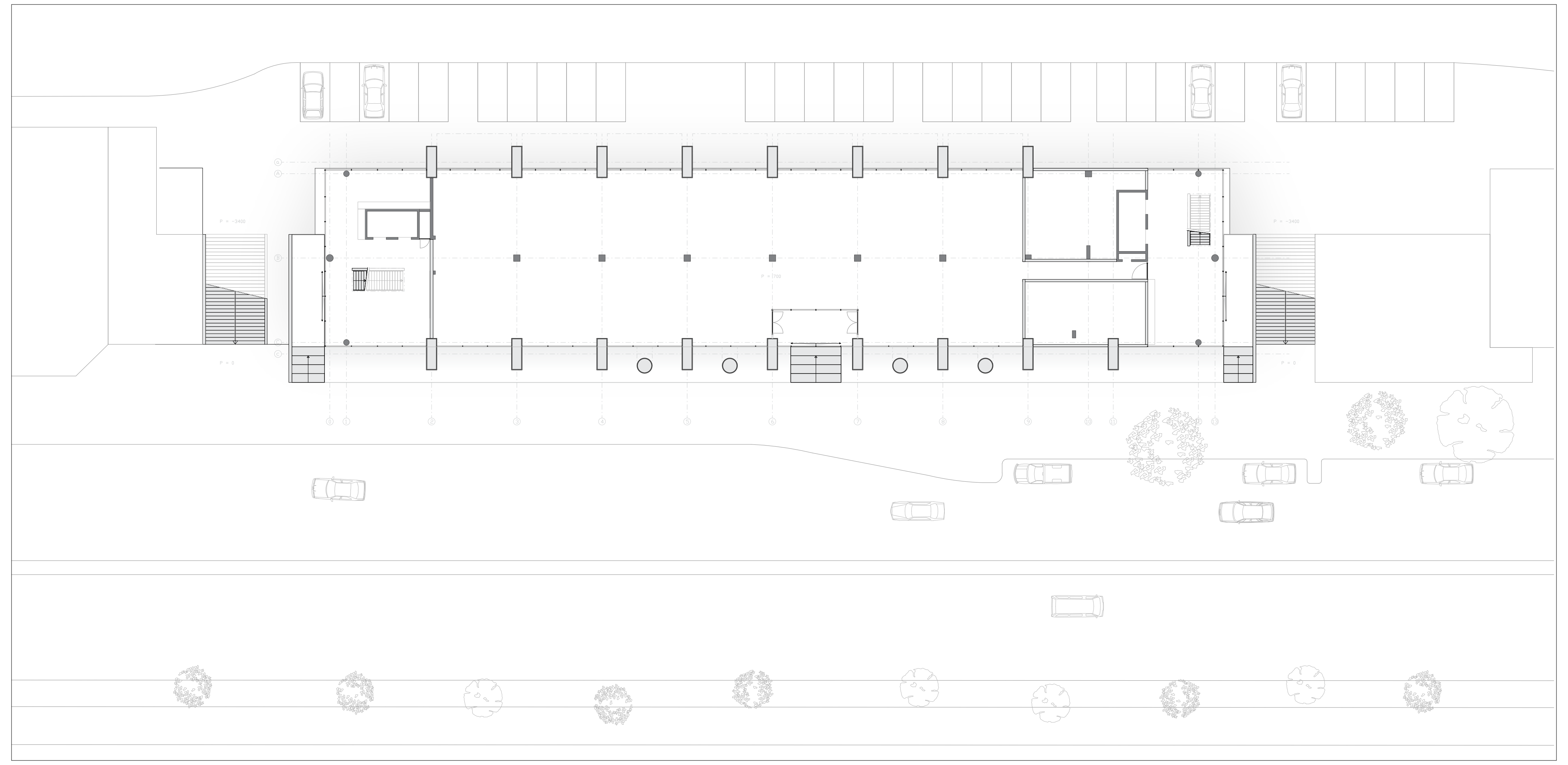

level boompjes | + 700 | scale 1:200

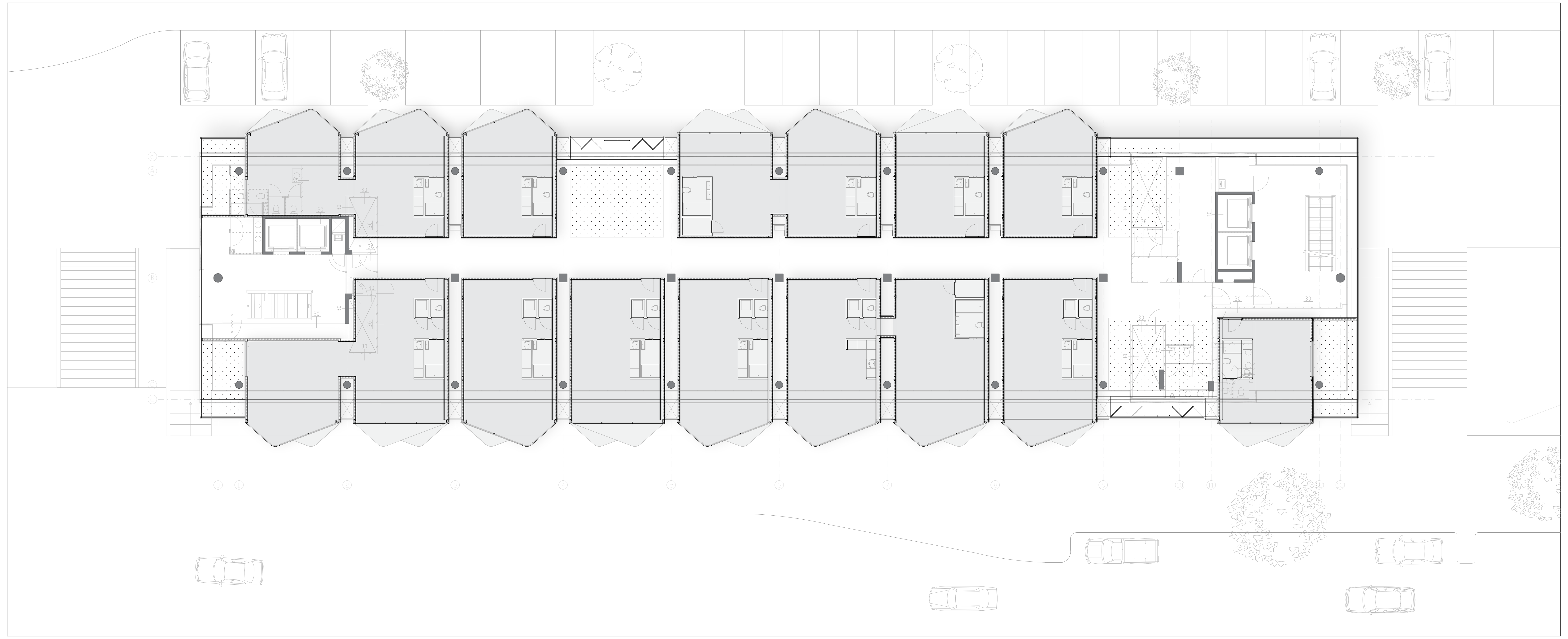

1st - 6th floor | + 3950 | + 20950 | scale 1:100

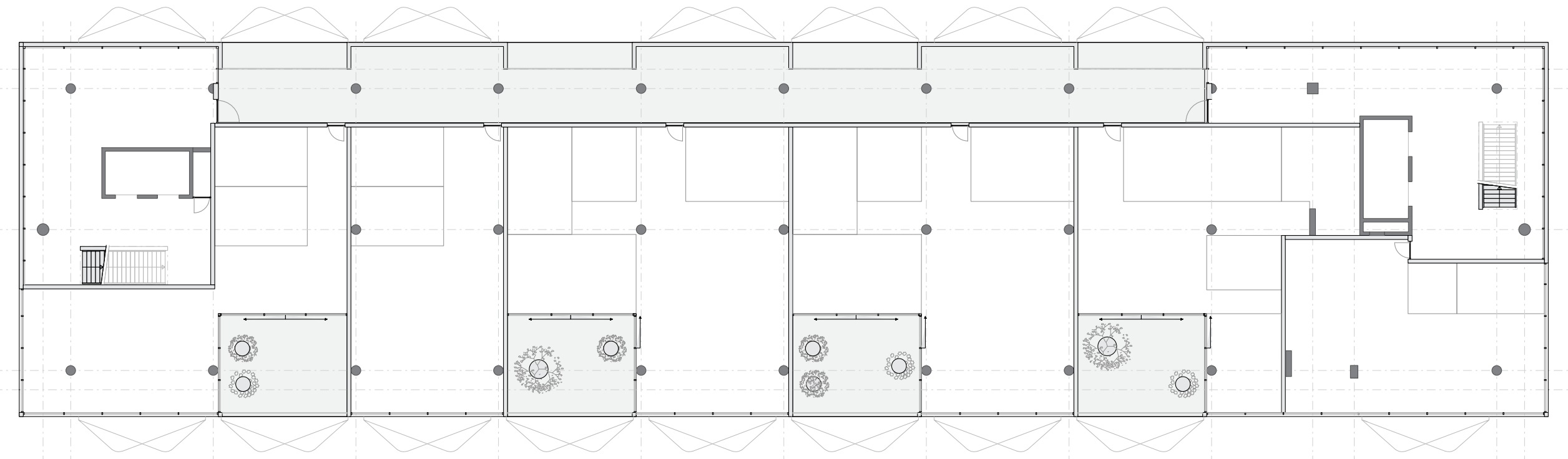

7th floor | + 24350 | scale 1:200

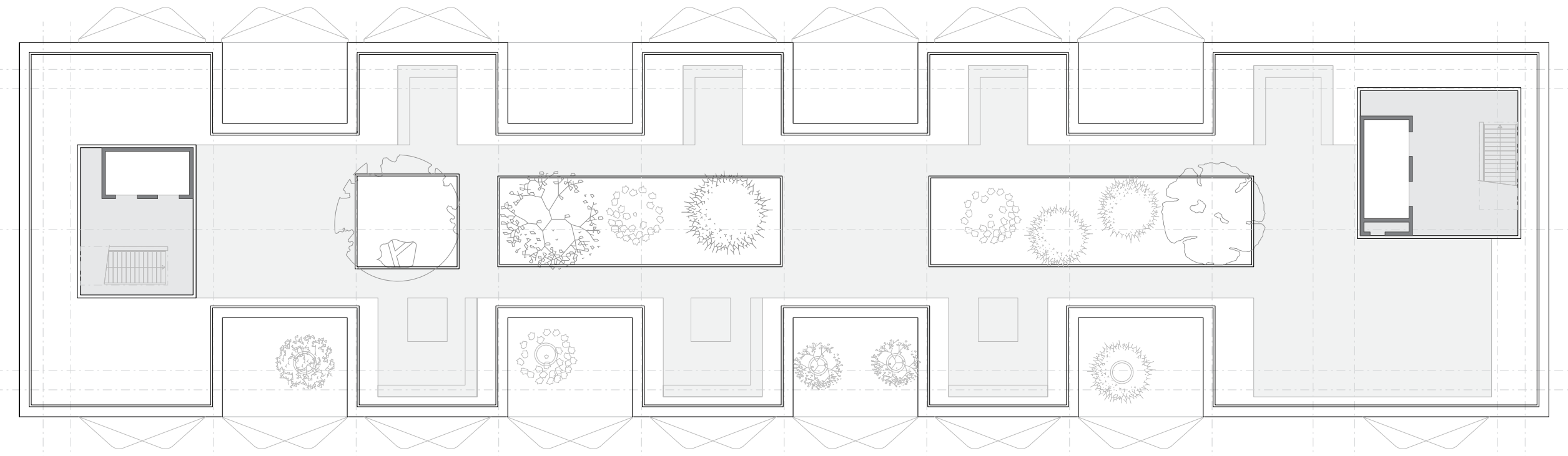

roof plan | + 33950 | scale 1:200

converting office space

using modular prefab architecture to convert vacant office buildings

MSc Architecture graduation project - ExploreLAB 2011-2012 | student F.P. Koornneef

instructors: ir. R.J. (Robert) Nottrot
ir. H.T. (Hilde) Remøy
ir. Y.J. (Ype) Cuperus

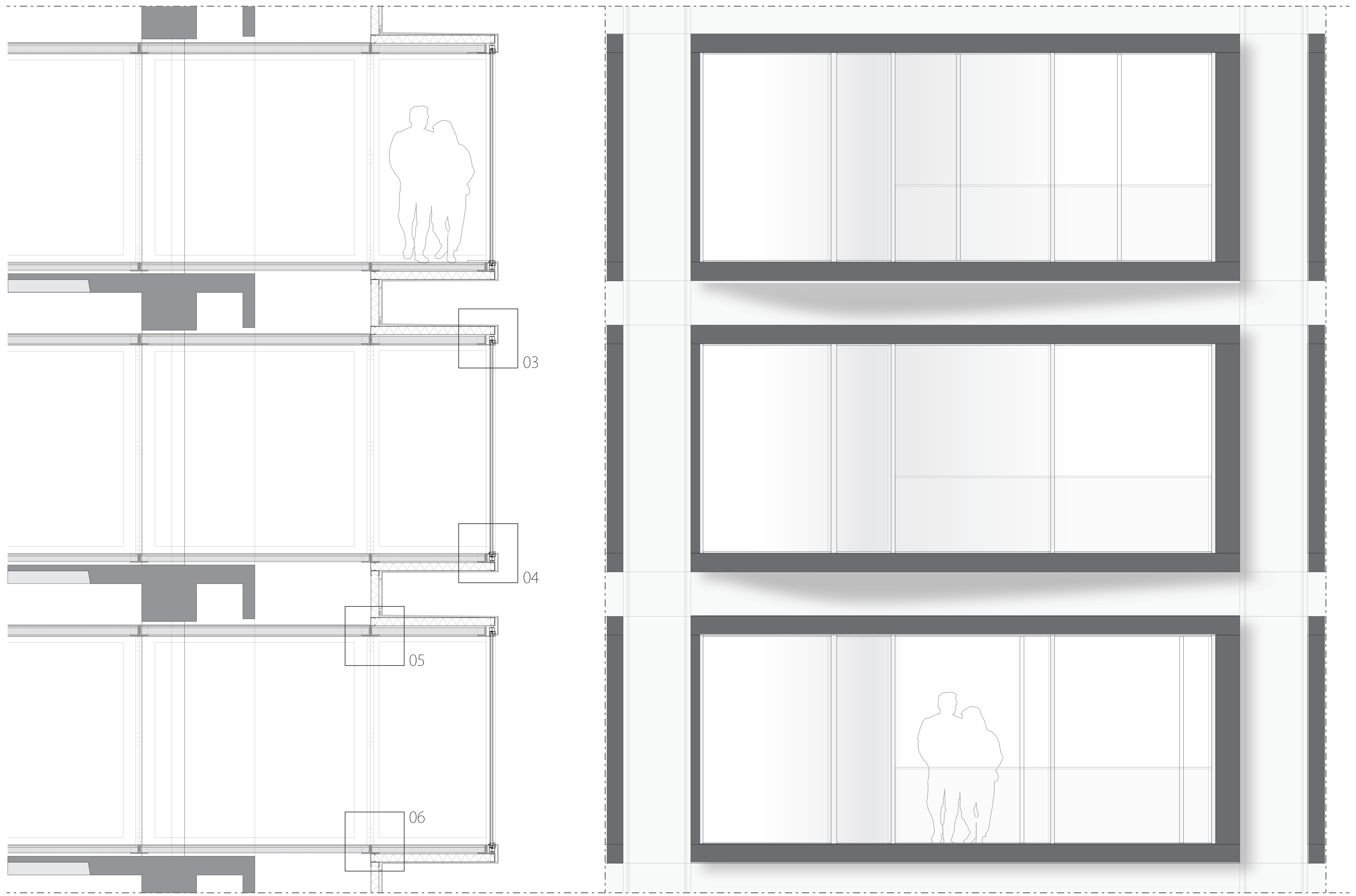

façade cross section + view | scale 1:20

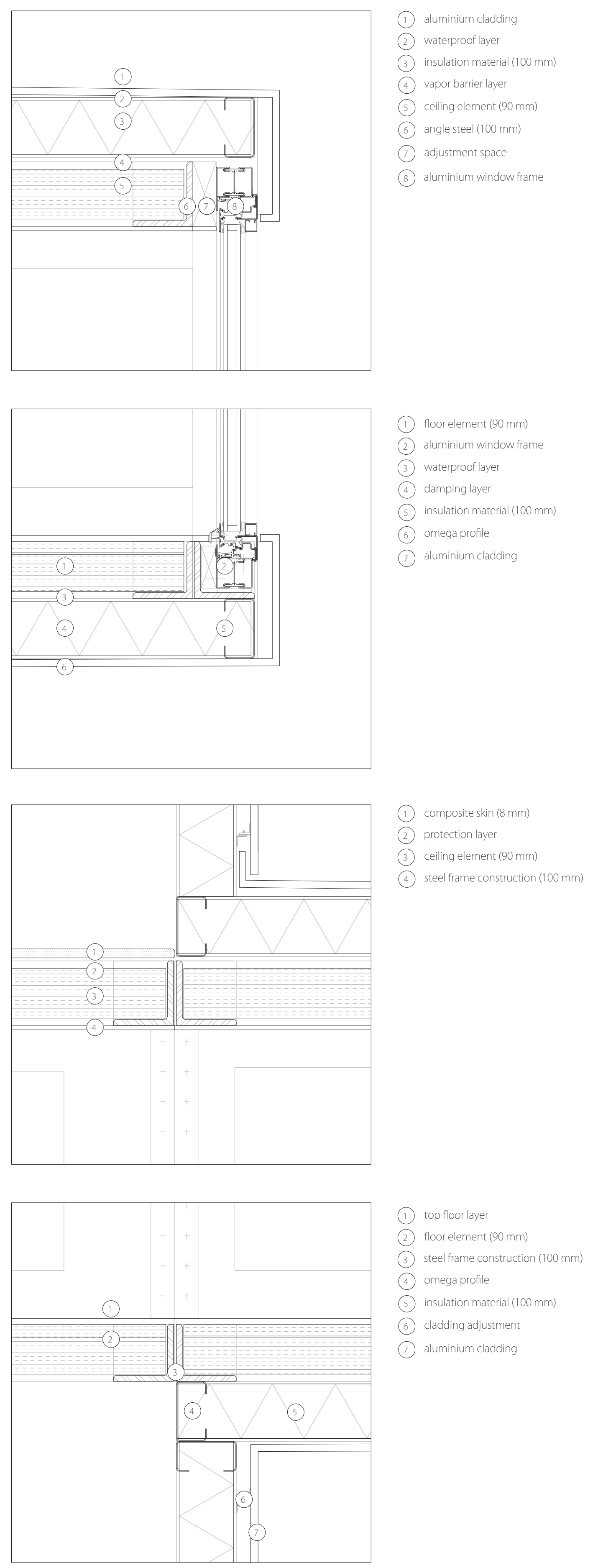
1 aluminium cladding
2 waterproof layer
3 insulation material (100 mm)
4 vapor barrier layer
5 ceiling element (90 mm)
6 angle steel (100 mm)
7 adjustment space
8 aluminium window frame
1 floor element (90 mm)
2 aluminium window frame
3 waterproof layer
4 damping layer
5 insulation material (100 mm)
6 omega profile
7 aluminium cladding
1 composite skin (8 mm)
2 protection layer
3 ceiling element (90 mm)
4 steel frame construction (100 mm)
1 top floor layer
2 floor element (90 mm)
3 steel frame construction (100 mm)
4 omega profile
5 insulation material (100 mm)
6 cladding adjustment
7 aluminium cladding

façade details | scale 1:5

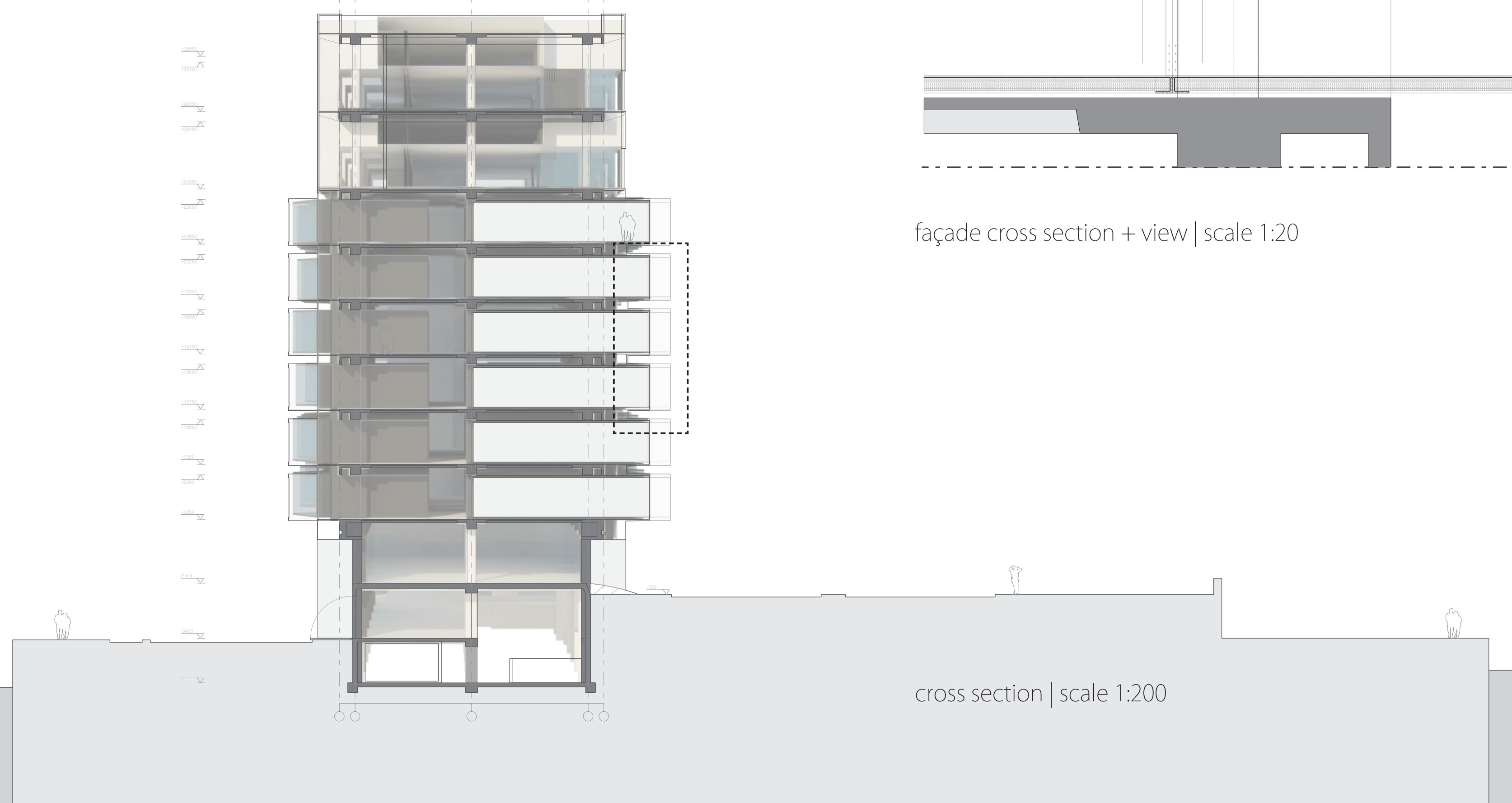

cross section | scale 1:200

converting office space

using modular prefab architecture to convert vacant office buildings

MSc Architecture graduation project - ExploreLAB 2011-2012 | student F.P. Koornneef

instructors: ir. R.J. (Robert) Nottrot
ir. H.T. (Hilde) Remøy
ir. Y.J. (Ype) Cuperus

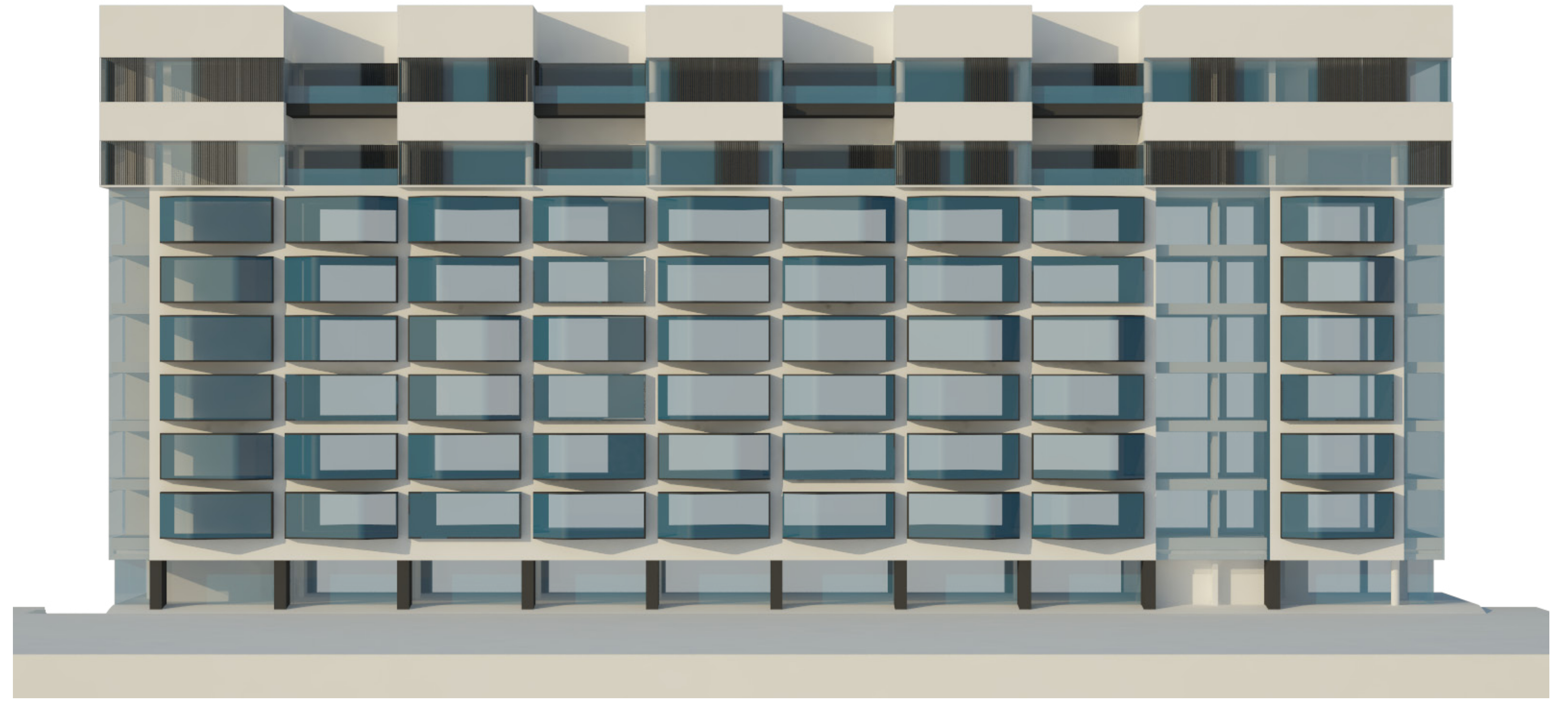

view SE façade | scale 1:200

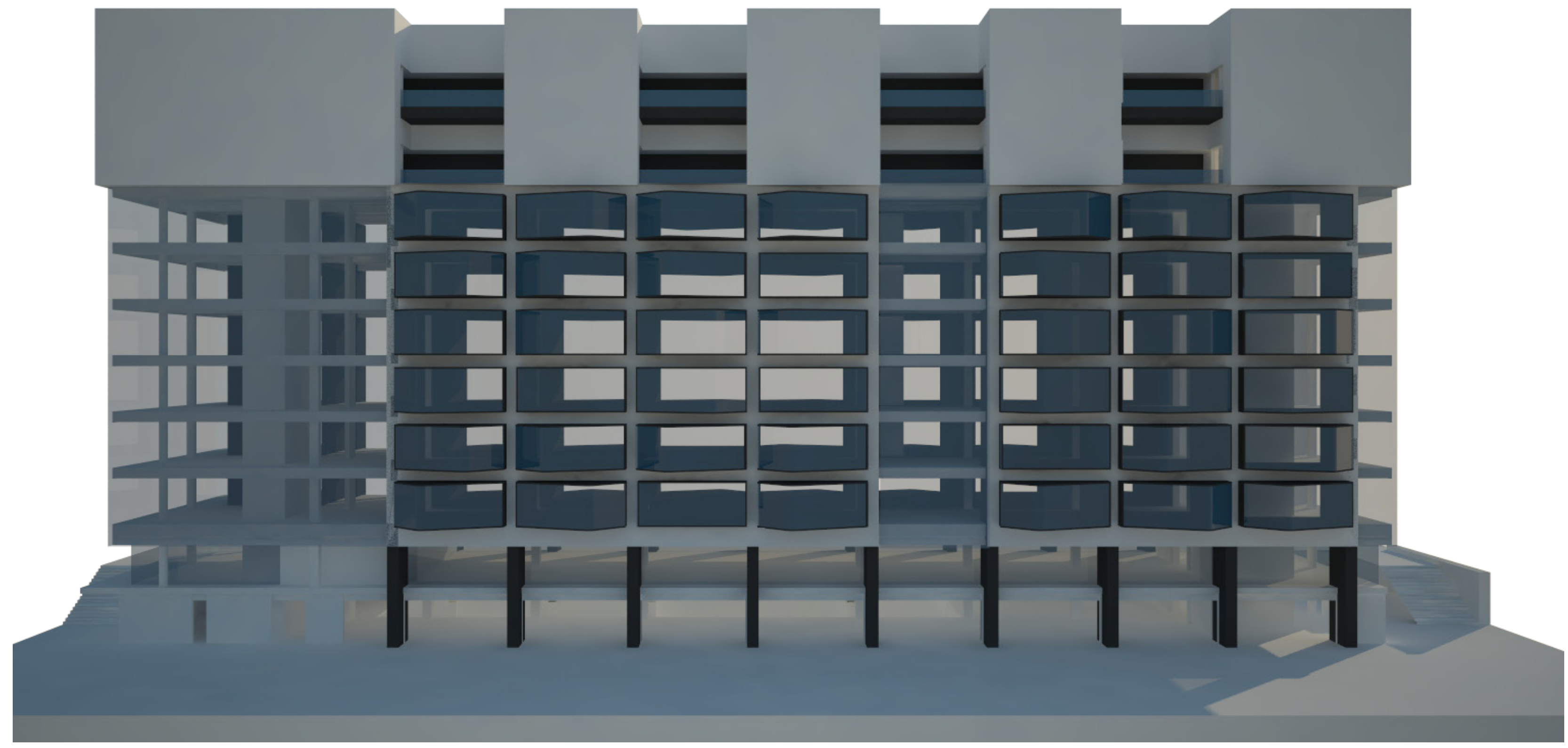

view NW façade | scale 1:200

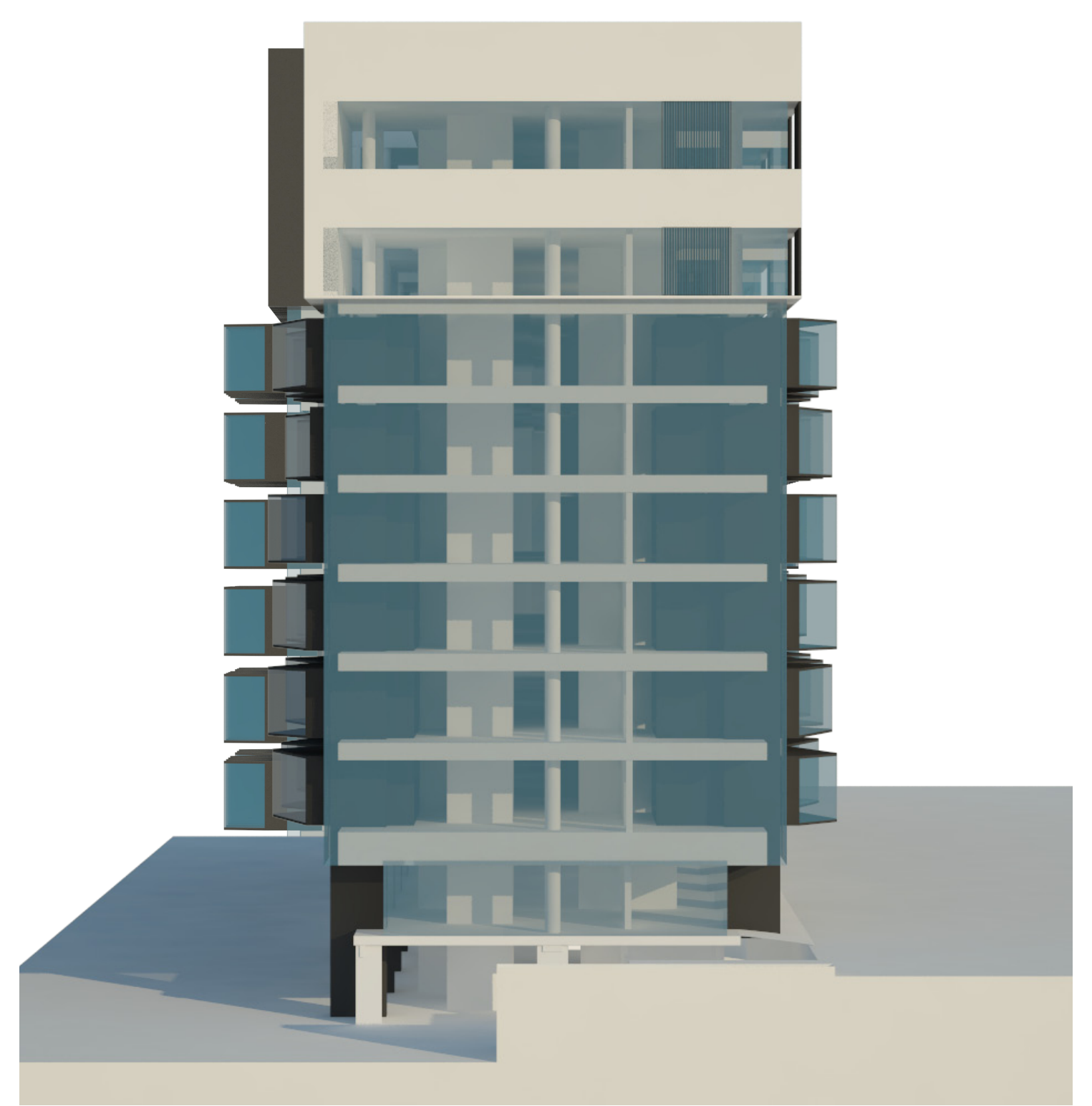

view SW façade | scale 1:200

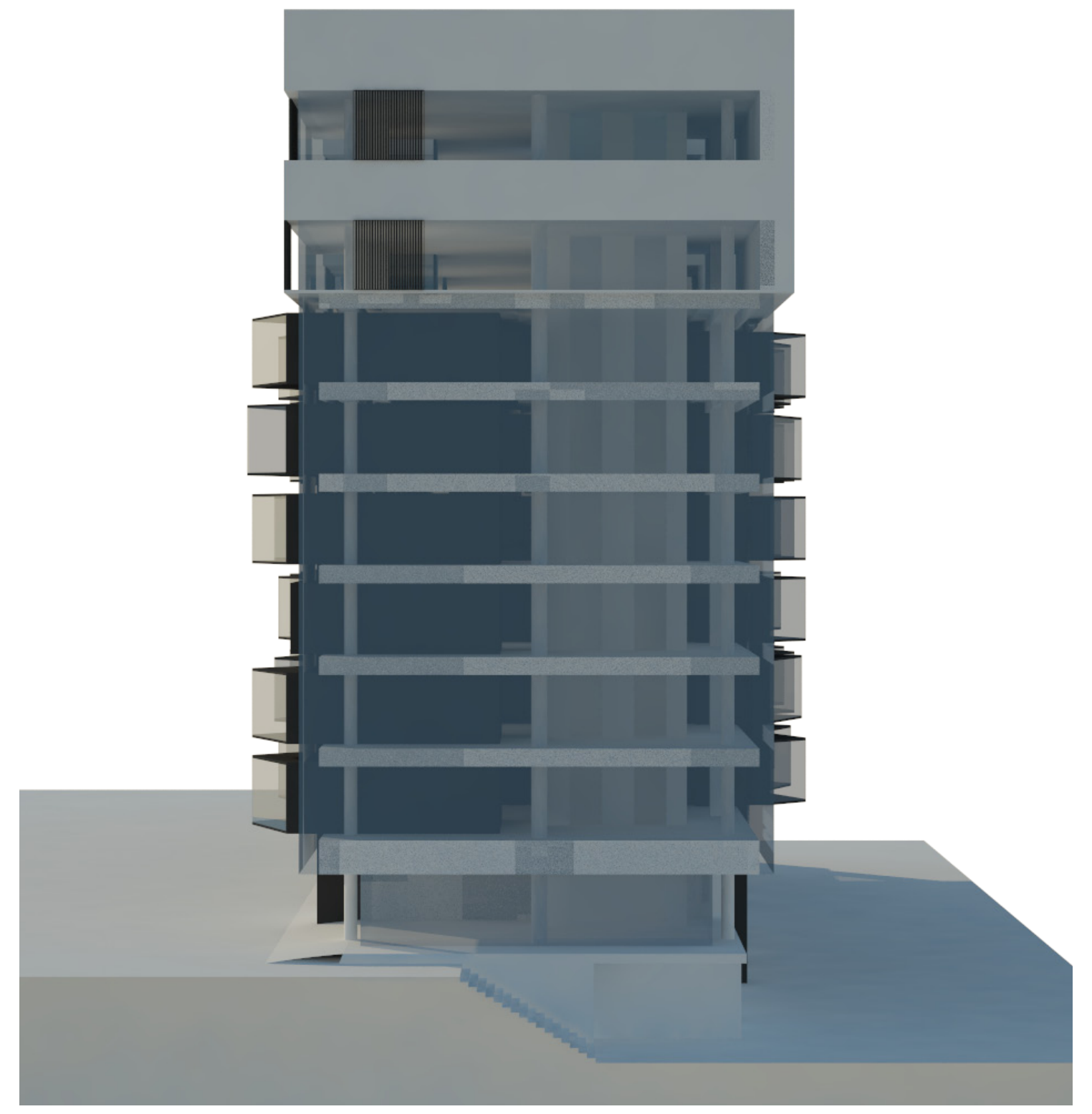

view NE façade | scale 1:200