TU Delft

Delft University of Technology

Document Version
Final published version

Licence
CC BY

Citation (APA)
Kobashi, T., Chandra Mouli, G. R., Liu, J., Chang, S., Harper, C. D., Zhou, R., Dewi, R. G., Siagian, U. W. R., Kang, J., & More Authors (2026). SolarEV Cities for deep urban decarbonization: A critical review of integration gaps and transition pathways. *Advances in Applied Energy*, *24*, Article 100314. https://doi.org/10.1016/j.adapen.2026.100314

Important note
To cite this publication, please use the final published version (if applicable).
Please check the document version above.

Copyright
In case the licence states “Dutch Copyright Act (Article 25fa)”, this publication was made available Green Open Access via the TU Delft Institutional Repository pursuant to Dutch Copyright Act (Article 25fa, the Taverne amendment). This provision does not affect copyright ownership.
Unless copyright is transferred by contract or statute, it remains with the copyright holder.

Sharing and reuse
Other than for strictly personal use, it is not permitted to download, forward or distribute the text or part of it, without the consent of the author(s) and/or copyright holder(s), unless the work is under an open content license such as Creative Commons.

Takedown policy
Please contact us and provide details if you believe this document breaches copyrights.
We will remove access to the work immediately and investigate your claim.

This work is downloaded from Delft University of Technology.

Advances in Applied Energy 24 (2026) 100314



Contents lists available at ScienceDirect

Advances in Applied Energy

journal homepage: www.elsevier.com/locate/adapen

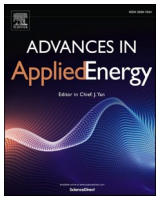

SolarEV Cities for deep urban decarbonization: A critical review of integration gaps and transition pathways

T. Kobashi [a,*], G. R. Chandra Mouli [b], J. Liu [c], S. Chang [d], C.D. Harper [e], R. Zhou [c], R.G. Dewi [f], U.W.R. Siagian [f], J. Kang [g], P.P. Patankar [h], Z.H. Rather [h], K. Say [i], T. Zhang [a], Y. Liu [a], K. Tanaka [j,k], P. Ciais [j], D.M. Kammen [l]

[a] Graduate School of Environmental Studies, Tohoku University, Sendai, Miyagi, Japan
[b] Delft University of Technology, Delft, the Netherlands
[c] Harbin Institute of Technology, Shenzhen, Shenzhen, China
[d] Purdue University, West Lafayette, IN, USA
[e] Carnegie Mellon University, Pittsburgh, PA, USA
[f] Bandung Institute of Technology, Bandung, Indonesia
[g] Seoul National University, Seoul, South Korea
[h] Indian Institute of Technology Bombay, Mumbai, India
[i] University of Melbourne, Melbourne, Australia
[j] Laboratoire des Sciences du Climat et de l'Environnement (LSCE), IPSL, CEA-CNRS-UVSQ, Université Paris-Saclay, Gif-sur-Yvette, France
[k] Earth System Division, National Institute for Environmental Studies (NIES), Tsukuba, Japan
[l] Department of Civil and Systems Engineering (CASE) and Paul H. Nitze School of Advanced International Studies (SAIS), Johns Hopkins University, Baltimore, MD, and Washington, DC, USA

ARTICLE INFO

Keywords:
Urban decarbonization
Rooftop photovoltaics
Electric vehicles
SolarEV City
Bidirectional charging
Socio-techno-economic transitions

ABSTRACT

Urban decarbonization is essential for meeting global climate goals; however, progress toward integrated low-carbon urban energy systems remains inadequately slow. The SolarEV City Concept integrates rooftop photovoltaic (PV) generation with electric vehicles (EVs) as city-scale distributed mobile energy storage, using EV batteries to increase the value and flexibility of urban rooftop PV. Modeling studies suggest that high-penetration PV+EV systems could supply 60–95% of municipal electricity demand under scenarios aligned with future sustainable-city development, but real-world integration remains limited. Despite rapid worldwide growth of both PV and EV markets, bidirectional Vehicle-to-Home/Building (V2H/V2B) and Vehicle-to-Grid (V2G) applications have advanced unevenly, revealing a persistent PV-EV integration gap. This critical integrative review analyzes this gap using a socio-techno-economic framework encompassing six interdependent dimensions: climate, urban structure, technology, economics, policy, and society, across nine countries: Australia, China, France, India, Indonesia, Japan, the Netherlands, South Korea, and the United States. Cross-national comparison shows that implementation is constrained by fragmented bidirectional-charging standards, immature value-stacking and compensation models, distribution-grid and market-access constraints, regulatory separation between energy and transport sectors, and equity barriers that disproportionately limit access for renters, apartment residents, and lower-income households. Five transition-pathway archetypes, ranging from Japan's resilience-driven V2H pathway to regulation-enabled commercial V2G pathways in France and the Netherlands, demonstrate that SolarEV Cities require a transition from parallel PV and EV promotion toward shared urban-energy visions, interoperable digital infrastructure, feeder-aware planning, inclusive market designs, and multi-stakeholder implementation platforms that convert rapid PV and EV innovation into scalable, resilient, and socially inclusive urban decarbonization.

1. Introduction

Anthropogenic climate change necessitates an urgent global

* Corresponding author.
E-mail address: takuro.kobashi.e5@tohoku.ac.jp (T. Kobashi).

https://doi.org/10.1016/j.adapen.2026.100314
Received 27 July 2026; Received in revised form 3 October 2026; Accepted 3 October 2026
Available online 5 October 2026
2666-7924/© 2026 The Author(s). Published by Elsevier Ltd. This is an open access article under the CC BY license (http://creativecommons.org/licenses/by/4.0/).

Nomenclature

Abbreviations

BESS	Battery energy storage system
BIPV	Building-integrated photovoltaics
CCS	Combined Charging System
DER	Distributed energy resource
DSO	Distribution System Operator
EV	Electric vehicle
EVSE	Electric vehicle supply equipment
FIT	Feed-in tariff
GIS	Geographic information system
HVAC	Heating, ventilation, and air conditioning
LFP	Lithium iron phosphate
LiRE	Least Invasive Renewable Energy
MLP	Multi-level perspective
NACS	North American Charging Standard
P2P	Peer-to-peer
PV	Photovoltaic
PVCF	Photovoltaic capacity factor
SAM	System Advisor Model
SSR	Self-sufficiency rate
TOU	Time-of-use
V1G	Managed unidirectional vehicle charging
V2B	Vehicle-to-building
V2G	Vehicle-to-grid
V2H	Vehicle-to-home
V2X	Vehicle-to-everything
VPP	Virtual power plant

transition away from fossil fuels [1]. Given that urban areas account for 67-72% of global energy-related CO_2 emissions, urban decarbonization is critical to achieving international climate targets, including those under the Paris Agreement [2]. Beyond climate mitigation, decarbonizing coupled urban energy-transportation systems yields substantial co-benefits, including improved air quality, reduced noise pollution, and enhanced public health, thereby supporting more sustainable, livable, and equitable urban development [3]. Despite this urgency, effective, scalable, and equitable pathways to deep urban decarbonization remain limited worldwide. Two emerging trends could accelerate urban carbon neutrality: the proliferation of distributed solar power generation, particularly rooftop photovoltaics (PV) [4], and the electrification of transportation via electric vehicles (EVs) [5,6]. PV technology has emerged as one of the most cost-effective and rapidly scalable sources of new electricity generation globally.

According to IEA PVPS, global PV installations reached ~700 GW, bringing cumulative capacity to ~3.0 TW in 2025 [7]. Although PV supplied ~10% of global electricity in 2025, its intermittency limits dispatchability and requires energy storage solutions for reliable grid operation and deep decarbonization [4,7,8]. "Rooftop PV" systems (i.e., distributed systems), constituting a significant portion of global PV capacity (~41%; IEA PVPS (2026)), are particularly well-suited for urban environments [9]. They leverage existing building stock, minimize land-use conflicts associated with ground-mounted systems, and reduce transmission and distribution losses by co-locating generation with demand. As the Least Invasive Renewable Energy (LiRE) option, they can enhance energy autonomy, while preserving natural ecosystems [10–14]. Studies indicate that maximizing the technical potential of rooftop PV could significantly contribute to, or even meet, national electricity demands [15,16]. Recent debate, however, highlights uncertainties and emphasizes that national-scale estimates remain sensitive to methodological assumptions [17].

Concurrently, global EV sales surpassed 20 million units in 2025 (26% market share of passenger vehicles; battery electric and plug-in hybrid electric vehicles) [18]; however, growth slowed in the United States and Europe during 2023-2026 owing to reduced subsidies [19]. BloombergNEF's Economic Transition Scenario projects that EVs could account for ~70% of new vehicle sales by 2040 [20]. Realizing the full decarbonization potential of EVs requires clean electricity and their systematic integration as flexible energy system assets [21]. Bidirectional charging technologies, collectively termed Vehicle-to-Everything (V2X), including Vehicle-to-Home (V2H), Vehicle-to-Building (V2B), and Vehicle-to-Grid (V2G), enable EVs to function as mobile energy storage units, capable of providing valuable grid services such as demand response, frequency regulation, and reserve capacity [22–25]. Despite this potential, V2X deployment remains limited, with notable exceptions such as V2H for resilience in Japan [26].

Research on "solar cities" positions urban rooftops as resources for distributed energy generation. Byrne et al. reviewed rooftop solar assessment methods and demonstrated their application to Seoul, establishing a methodological basis for evaluating city-scale PV potential [27]. They subsequently examined solar city development strategies, emphasizing coordinated investment at the infrastructure scale [28]. Taminiau et al. integrated rooftop PV and energy efficiency into urban energy planning [29], while O'Shaughnessy et al. highlighted municipal support, partnerships, and trust as enablers of solar access for lower-income households [30]. These studies establish technical, financial, planning, and social foundations for urban solar deployment. Extending this approach to electrified mobility creates opportunities to use EV batteries to align variable rooftop PV generation with urban electricity demand.

The "SolarEV City Concept" extends this solar city approach by coupling rooftop PV with EV batteries for deep urban decarbonization [31]. It envisions urban energy systems, in which extensive rooftop PV generation is coordinated with large fleets of EVs acting as distributed battery storage, thereby creating a more resilient, efficient, cost-effective, and largely self-sufficient urban energy infrastructure [14]. City-scale modeling indicates that optimizing the integration of rooftop PV (e.g., 70% rooftop area utilization) with EVs as batteries could meet 60-95% of municipal electricity demand, compared with 30-40% for PV alone in Japan [15]. Case studies across diverse urban contexts also project substantial CO_2 emission reductions and energy-cost savings [14,15,32–35]. However, SolarEV City performance is highly sensitive to local climate, rooftop availability, building density, electricity-demand profiles, vehicle ownership, parking patterns, distribution-grid capacity, and policy environments [36]. The Concept therefore cannot be assessed solely as a technology package; it must be analyzed as an urban socio-techno-economic system.

This review addresses a critical structural disconnect in urban energy transitions: despite the rapid growth of PV and EV markets and the demonstrated potential of their integration, systemic integration remains slow and fragmented. Here, the integration gap comprises two related but distinct layers. Technical integration refers to end-to-end compatibility among vehicles, bidirectional chargers, communication protocols, building-energy systems, and grid-interconnection equipment. Operational integration refers to the ability of compatible assets to be aggregated, dispatched, metered, settled, and compensated, and to participate routinely in electricity and flexibility markets. Systemic integration requires both layers to align with wider economic, policy, and social conditions. Previous reviews have generally examined rooftop PV, EV adoption, charging systems, or V2G technologies as separate technical or sectoral topics [26,37–39].

In contrast, this review treats PV-EV integration as an urban socio-techno-economic transition problem rather than as a set of

independent technologies. Its contribution is threefold: it (1) integrates climate, urban structure, technology, economics, policy, and society within a single analytical framework; (2) combines techno-economic evidence with an issue-based comparison of nine national pathways; and (3) identifies recurring interface failures, context-dependent transition-pathway archetypes, and implementation requirements for integrated SolarEV Cities. Covering Australia, China, France, India, Indonesia, Japan, the Netherlands, South Korea, and the United States, the review clarifies the conditions under which rooftop PV, EVs, and bidirectional charging can be coordinated into scalable, resilient, and socially inclusive urban energy systems. Specifically, this study seeks to answer the following research questions:

- What climatic, urban, technological, economic, social, and policy conditions enable the systemic integration of rooftop PV with EVs in urban contexts, and where do critical misalignments persist across domains?
- Beyond greenhouse gas emission reductions, how can the SolarEV City model reconfigure urban energy governance, resilience, energy democracy, and social equity?
- What path-dependent and context-specific barriers inhibit the scaling of integrated SolarEV City systems, and what transition-pathway archetypes are emerging across the selected countries?
- What research priorities and policy directions can accelerate the transition toward SolarEV Cities?

To address these questions, Section 2 introduces the SolarEV City Concept, review approach, and socio-techno-economic framework. Section 3 examines the climatic, urban, technological, economic, policy, and social factors shaping PV-EV integration. Section 4 compares nine national pathways and identifies transition-pathway archetypes. Section 5 discusses transition implications, staged implementation, and international coordination, and Section 6 concludes the review.

2. Conceptual and analytical framework

2.1. SolarEV City Concept

Advances in PV and battery technologies have rapidly reshaped the global energy landscape [6], while PV generation costs have fallen rapidly since the mid-2010s [40]. The “SolarEV City Concept” proposes maximizing rooftop PV deployment and integrating it with EVs as distributed mobile batteries at the city scale (Fig. 1) [31]. Rooftop PV and EVs are highly complementary: variable PV generation requires flexible storage, while EVs provide substantial storage capacity at limited additional cost [41]. Both technologies are located on or near urban buildings, where energy demand is concentrated. This co-location enables local electricity consumption, reducing losses and grid infrastructure requirements (Fig. 1) [14]. Rooftop PV uses existing building surfaces without requiring additional land, making it the Least Invasive Renewable Energy (LiRE) option [14]. SolarEV Cities offer substantial co-benefits, including improved air quality [42], reduced noise [43], and greater energy independence and resilience [44]. They can also create local employment [45] and increase economic circulation in cities [46]. By expanding access to low-cost PV electricity competitive with retail electricity tariffs, SolarEV Cities may accelerate electrification through both economic and environmental incentives [47]. Although small rooftop systems have higher installation costs per kW, they should be benchmarked against retail electricity tariffs rather than large-scale PV costs.

2.2. Review approach

This study adopts a critical integrative review approach to synthesize a heterogeneous and interdisciplinary evidence base while moving beyond description toward critical evaluation, conceptual integration, and the identification of research gaps [48,49]. The review was organized around six analytical dimensions, climate, urban structure, technology, economics, policy, and society, and nine countries. Topic-specific searches addressed rooftop-PV potential, EV adoption, smart and bidirectional charging, distribution-grid integration, business models, regulation, governance, social acceptance, and energy justice. This issue-based structure enabled technical, economic, institutional, and social evidence to be examined within a common analytical framework.

Peer-reviewed studies formed the primary evidence base. They were supplemented by government, regulatory, standards-body, industry, and institutional publications when academic literature did not adequately cover recent or jurisdiction-specific information on policies, charging standards, markets, and demonstration projects. Evidence was synthesized narratively and comparatively across dimensions and countries, with attention to commonalities, contradictions, contextual differences, and interfaces among technologies, grids, markets, institutions, and users. The synthesis identified recurring integration barriers, path-dependent national trajectories, emerging SolarEV City transition-pathway archetypes, and practical implementation



Fig. 1. Conceptual illustration of a SolarEV City. Rooftop PV and EV batteries meet urban electricity demand through coordinated charging, discharging, and local energy exchange. The two arrows represent electricity flows from surrounding suburban areas to urban demand centers through aggregated rooftop PV and EV resources operating as virtual power plants (VPPs).

requirements.

2.3. Socio-techno-economic framework

The transition toward SolarEV Cities requires the reconfiguration of electricity, mobility, buildings, digital control, markets, and urban governance [31,50–53]. Explaining the contrast between the rapid individual deployment of PV and EVs and their slow systemic integration requires a holistic approach that goes beyond isolated assessments [54]. Therefore, this review employs a socio-techno-economic system perspective, based on six interdependent dimensions: "climate", "urban structure", "technology", "economics", "policy", and "society" (Table 1 and Fig. 2). The multi-level perspective (MLP) is then used to analyze socio-technical transitions as arising from interactions among three levels: the socio-techno-economic regime, niche innovation, and exogenous landscape pressures [55].

Fig. 2 illustrates a four-phase progression from fragmented PV and EV deployment toward systemic city-wide integration shaped by evolving barriers, enabling mechanisms, and socio-techno-economic coordination. Because rooftop PV and EVs have historically developed through different markets, infrastructures, and policy instruments, early adoption often occurs separately, with limited incentives for households or firms to purchase and operate them as an integrated system. In Phase 1, rooftop PV diffuses as a distributed-generation niche, often supported by feed-in tariffs (FITs), subsidies, or net metering, while EV adoption remains limited. In Phase 2, EV diffusion accelerates as battery costs decline, vehicle models diversify, and charging infrastructure expands [5].

Compared with PV, EVs are less dependent on site-specific building infrastructure, allowing them to diffuse more rapidly. In Phase 3, higher rooftop-PV and EV penetration creates sufficient distributed capacity for smart charging, V2H, VPP aggregation, and emerging flexibility markets. Finally, Phase 4 represents systemic SolarEV City integration, in which buildings, vehicles, neighborhoods, suburbs, and urban demand centers are coordinated through digital control, local energy exchange, VPPs, and distribution-grid management. This integration proceeds from the bottom up, from household optimization to district, city, and intercity coordination. P2P trading supports district-scale exchange and value allocation, while VPPs and distribution-grid management enable coordination at broader spatial scales. Because each technology has its own diffusion dynamics, PV-EV integration is initially limited and develops differently across regions. Moving from one phase to the next requires threshold levels of technology adoption, interoperability, business-model maturity, regulatory support, and stakeholder coordination.

Table 1
Analytical framework for assessing SolarEV City development. The framework comprises six interrelated dimensions, climate, urban structure, technology, economics, society, and policy, that collectively influence the feasibility, scalability, and equity of rooftop PV and EV integration. These dimensions are used throughout the review to identify opportunities, barriers, and development pathways toward SolarEV Cities.

Dimension	Key factors
Climate	Solar resource availability, heating and cooling demand, seasonal variability, temporal demand-supply matching
Urban Structure	Building-use composition, rooftop availability, urban-rural gradients, core-suburban spatial structure, population, demand density, parking access
Technology	Rooftop PV, EVs as mobile storage, V1G/V2H/V2B/V2G operation, interoperability, charging standards and protocols, smart grid
Economics	Value creation mechanisms, emerging business models, including vehicle-to-grid (V2G), VPP, peer-to-peer (P2P) electricity trading, high upfront investments but low maintenance costs, technology learning, cost decline, techno-economic analysis, actor-specific cost–benefit allocation
Society	Energy justice, social acceptance, behavioral barriers, stakeholder participation, mobility needs, privacy, demand response
Policy	Governance structure, regulatory frameworks, renewable energy and EV mandates, market incentives including feed-in tariffs, interconnection rules, electricity-market access, tariffs, building codes, and flexibility procurement

3. Socio-techno-economic factors for PV-EV integration

3.1. Urban form

The performance of PV+EV systems varies with urban characteristics, including location, density, and building usage types due to variations in use, which affect PV generation and space heating and cooling demand (Table 2). Therefore, urbanization strongly influences the performance of the PV+EV system within a city. The level of urbanization can be characterized by the rooftop area per capita and the number of vehicles per capita. Highly urbanized and populated regions in Japan typically exhibit less rooftop area per capita and fewer vehicles per capita, with the reverse pattern in less urbanized regions [15]. Energy demand also tends to increase with urbanization; consequently, large, highly urbanized areas generally have PV+EV self-sufficiency lower than suburban or rural municipalities [15].

In contrast, rural cities can more effectively utilize rooftop PV+EV systems because larger roof areas and greater vehicle ownership provide more generation and storage capacity. Highly urbanized cities such as Tokyo, Seoul, and Paris, which have high energy demands, generally benefit less from PV+EV systems than smaller cities; however, they still achieve self-sufficiency levels of 53% [31], 33% [35], and 31% [36] with PV+EV systems, respectively. By contrast, rural cities such as Okayama City, Japan (with a population of ~0.7 million), achieve self-sufficiency (i.e., the share of total electricity demand supplied by rooftop PV, directly or through EV batteries) of 95% and energy sufficiency (i.e., the ratio of annual rooftop-PV generation to total annual electricity demand) of 169% [31]. These results indicate that energy sharing between and within cities is critical to the efficient deployment and use of PV+EV systems across broader regions.

Urban structure strongly shapes the performance of PV+EV systems. Generally, energy demand density ($kWh \cdot m^{-2}$), building density, and population density decrease from the city center toward the peripheral areas [56]. Consequently, rooftop PV systems in the city center generate limited electricity and little surplus electricity, resulting in high self-consumption and low self-sufficiency. In contrast, suburban areas are characterized by low energy demand density, larger rooftop areas, and more home-parked EVs, resulting in low self-consumption and high self-sufficiency. Therefore, suburban areas have the potential to serve as VPPs, supplying electricity to the city center (Fig. 1) [56].

The Paris region in France exhibits similar characteristics: integrating the urban core with surrounding suburbs substantially increases self-sufficiency from 31% to 48% [36]. This core–suburban complementarity is central to the SolarEV City Concept because it shows that the relevant planning unit is not always the individual building, but the neighborhood, feeder, municipality, or wider metropolitan region. For high-density areas, the apartment complex, shared parking facility, mobility hub, or district should therefore serve as the deployment unit. Community solar expands access to PV ownership or credits but does not itself enable V2G; this requires a contractual and digital link to bidirectional shared charging and an aggregator that coordinates EV charging and export with PV output and grid needs. Similarly, curbside charging becomes V2G-capable only with bidirectional hardware, export metering, aggregator control, mobility guarantees, and participant compensation.

Building uses (e.g., shops, restaurants, offices, schools, hospitals, residences, and factories) also differ in energy-demand profiles, EV-parking availability, and physical form. Cities tend to exhibit distinct urban structures because of variations in land prices and accessibility requirements. Together with PV-generation patterns, these differences cause PV+EV performance to vary among building types [35]. In Seoul,

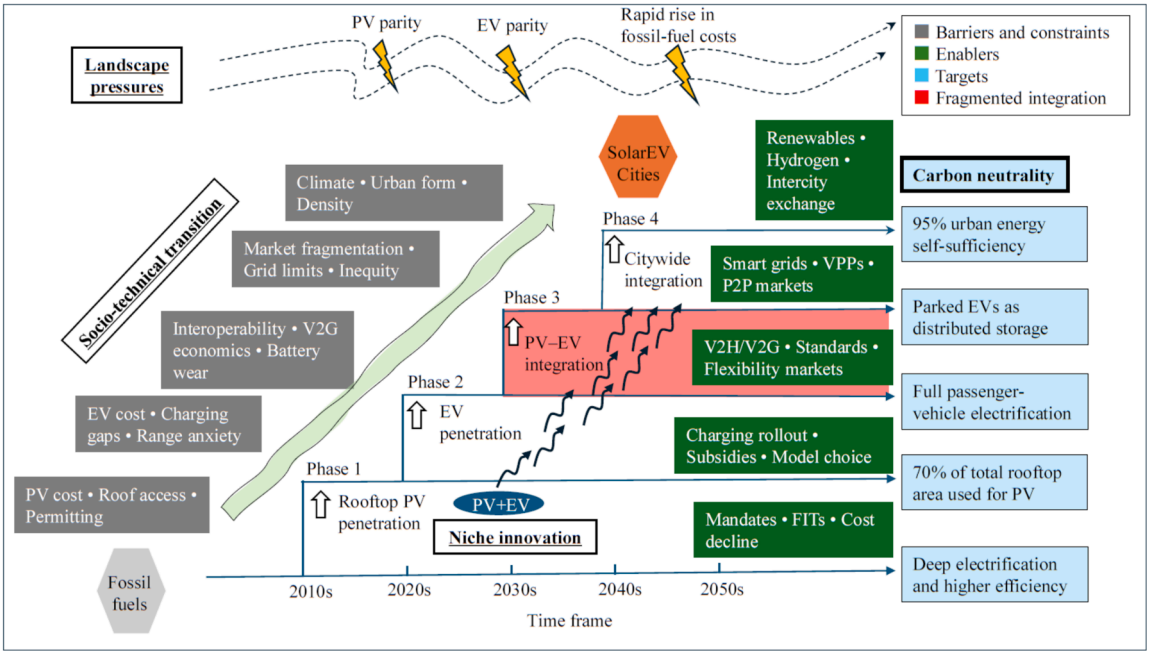

Fig. 2. Conceptual framework for the stepwise socio-technical transition of urban energy systems toward SolarEV Cities from the 2010s to the 2050s. The framework shows four phases: rooftop-PV penetration, EV penetration, PV-EV integration, and citywide integration, together with the associated barriers, enablers, landscape pressures, and system targets. Red shading indicates incomplete or fragmented integration during the PV-EV integration phase. The 70% rooftop utilization represents a long-term urban-design target rather than the presently installable share.

Table 2
SolarEV City research across urban, municipal, regional, and national scales. The table summarizes published analyses that evaluate rooftop PV combined with EV batteries or V2G/V2H-type operation. Reported self-sufficiency values are not directly comparable because assumptions differ across studies, including rooftop-PV potential, EV penetration, usable battery capacity, spatial scale, and demand profiles. Table 2 should be interpreted as evidence of the breadth of PV-EV integration research rather than as a direct ranking of performance across cities.

Case study	Country	Population	Location	Reported self-sufficiency or key result	Main assumptions	Reference	Key finding / contribution
Kyoto City	Japan	1.47 million	35.0°N, 135.8°E	70%	Max 70% of roof area, and all passenger vehicles as EVs.	[14]	First SolarEV City analysis
Kyoto City	Japan	1.47 million	35.0°N, 135.8°E	95%	1-km mesh analysis	[56]	Suburban residential areas have high potential
All municipalities	Japan	124 million	24-46°N, 123-146°E	85 ± 12%	The same as above	[15,31]	Analysis of all Japanese municipalities
Shangmeilin Village, Shenzhen	China	4,200	22.6°N, 114.1°E	-	High PV self-consumption with large demand	[57]	Where PV-only self-consumption is high, adding EVs provides limited benefit.
Seoul, Incheon, Daejeon, Sejong, and Jeju-do	South Korea	9.6 million (Seoul)	37.6°N, 127.0°E	33% in Seoul, 75% in Jeju-do	Max 70% of roof area, and all passenger vehicles as EVs.	[35]	High demand and limited rooftop area constrain most cities, except Jeju-do.
Paris and Ile-de-France	France	2.1 and 12 million, respectively	48.9°N, 2.4°E	31% and 48%, respectively.	Max 70% of roof area, and all passenger vehicles as EVs.	[36]	Including suburban areas substantially increases Paris's self-sufficiency.
Paris, Lyon, and Marseille	France	2.1, 0.5, 0.9 million, respectively.	48.9°N, 2.4°E; 45.7°N, 4.8°E; 43.3°N, 5.4°E	20% to 42%	Half of roof area, and half of passenger vehicles as EVs.	[58]	Strong economic benefits are identified.
DKI Jakarta	Indonesia	10.6 million	6.2°S, 106.8° E	75–76%	Max 70% of roof area, and all passenger vehicles as EVs.	[32]	Low-latitude cities lack a winter demand peak, improving PV+EV performance.
Bangkok	Thailand	5.7 million	13.7 °N, 100.6°E	71%	The same as above.	[33]	PV+EV systems are highly effective in developing cities.
National	Spain	50 million	40.4°N, 3.7°W	100%	PV area equal to 73 m^2 per capita with all EVs.	[41]	Analysis of 100% self-sufficiency with PV and EV at a national scale.
West coastal area	Sweden	100,000	55.5°N-59.0° N, 11°E- 13°E	84%	Wind (33 MW) and solar (2.7 MW) combined with V2G.	[59]	Wind coupling is effective in high northern latitudes.

South Korea, PV+EV systems in residential buildings were found to perform better than in office, retail, institutional, and industrial

buildings [35]. This reflects the stronger spatial and functional alignment among residential EV parking availability, rooftop PV potential, and opportunities to store and shift locally generated solar electricity through household- or neighborhood-level energy storage.

3.2. Climate effect

Local climate shapes SolarEV City performance by affecting PV electricity generation, space-heating and cooling loads, and the temporal balance between electricity supply and demand [15]. PV generation is generally higher in dry climates and at lower latitudes (Fig. 3). PV output is limited to daylight hours and varies with weather conditions across multiple timescales, ranging from seconds and hours to days, seasons, and even decades. Similarly, space-heating and cooling demands in buildings vary with local weather conditions. Heating and cooling electricity demand also depends on building insulation and form and HVAC efficiency, including heat-pump performance, which together shape aggregate city-scale demand. Consequently, areas with high PV generation and low heating/cooling demand have the highest SolarEV City potential.

To isolate climatic effects on SolarEV City performance, we conducted a controlled simulation. The hourly electricity demand for Kyoto City [14] was reconstructed from the normalized 2024 load profile of the Kansai Electric Power service area (KEPCO: Kansai Electric Power Company) using a top-down machine-learning approach. The Kyoto-derived demand model, based on meteorological and calendar variables, was transferred to the nine capital cities without local retraining to provide a common behavioral baseline for isolating climatic effects (Fig. 4; Supplementary Information). This transfer assumes similar daily schedules and vehicle availability. Differences in work and weekend schedules, commuting, occupancy, appliance use, thermal comfort, and parking habits could alter the timing of demand and vehicle availability relative to PV generation, thereby biasing city-specific self-sufficiency. The results should therefore be interpreted as a controlled climate-sensitivity comparison rather than city forecasts; local applications require locally calibrated demand and mobility data. These profiles were combined with PV generation simulated from city-specific weather files under common urban, EV, and dispatch assumptions.

The techno-economic model [44] was applied to these demand and PV-generation datasets to calculate self-sufficiency rate and other performance indicators. By holding urban structure, rooftop PV capacity, and the EV fleet constant while varying climate, the analysis isolates climatic influences and quantifies the electricity that could be supplied by integrated PV+EV systems. The controlled comparison assumed full passenger-vehicle electrification, common EV availability and battery capacity, and a dispatch rule that prioritized mobility while storing surplus PV electricity [44].

The results reveal three broad climatic patterns (Fig. 4). First, moderate and relatively sunny climates, represented by Canberra, Washington D.C., and Tokyo, show high SolarEV City potential because PV generation is strong and heating/cooling demand remains moderate. Second, hot or monsoon-influenced low-latitude cities, such as New Delhi and Jakarta, benefit from high solar altitude and good seasonal coincidence between PV generation and cooling demand, but their performance is reduced during very hot or rainy periods. Third, high-latitude cities, such as Paris and Amsterdam, face severe winter deficits because solar generation declines when heating demand increases. These results indicate that SolarEV City systems can provide high annual self-sufficiency in many climates, but high-latitude regions require stronger coupling with complementary resources such as wind power, long-duration storage, regional electricity exchange, or demand-side flexibility.

3.3. Technologies

Rapid advances in rooftop PV systems, EVs, bidirectional charging, smart inverters, battery energy storage systems (BESS), and digital control platforms provide a strong technological foundation for SolarEV Cities [62–64]. The next challenge is coordinating these technologies across urban form, mobility schedules, distribution networks, charging interfaces, and battery lifecycles. This system-level integration can transform buildings and vehicles into coordinated energy resources and enable cities to maximize local renewable generation, flexibility, resilience, and infrastructure efficiency. The principal engineering task is therefore to develop secure, interoperable architectures that enable

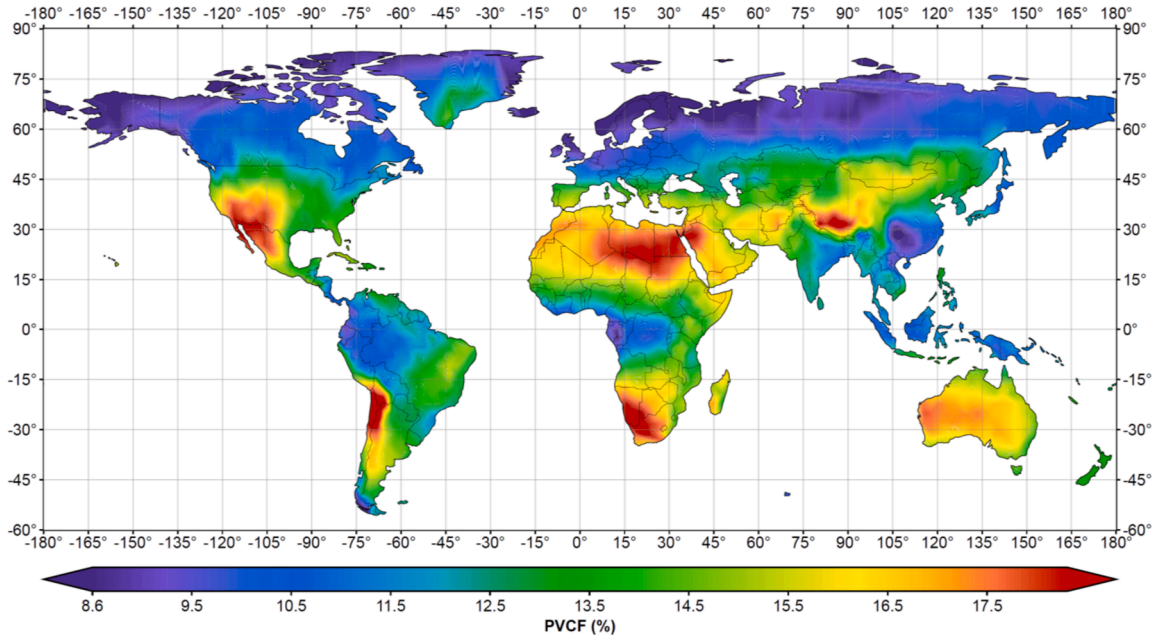

Fig. 3. Global distribution of annual photovoltaic capacity factor (PV_{CF}, %) estimated using the System Advisor Model (SAM) [60] with NASA POWER [61] hourly meteorological data for 2024. A fixed-tilt PV system was assumed for each grid cell with the tilt angle equal to the absolute latitude but capped at 30°. PV_{CF} represents the ratio of annual simulated PV generation to the theoretical annual generation at rated capacity.

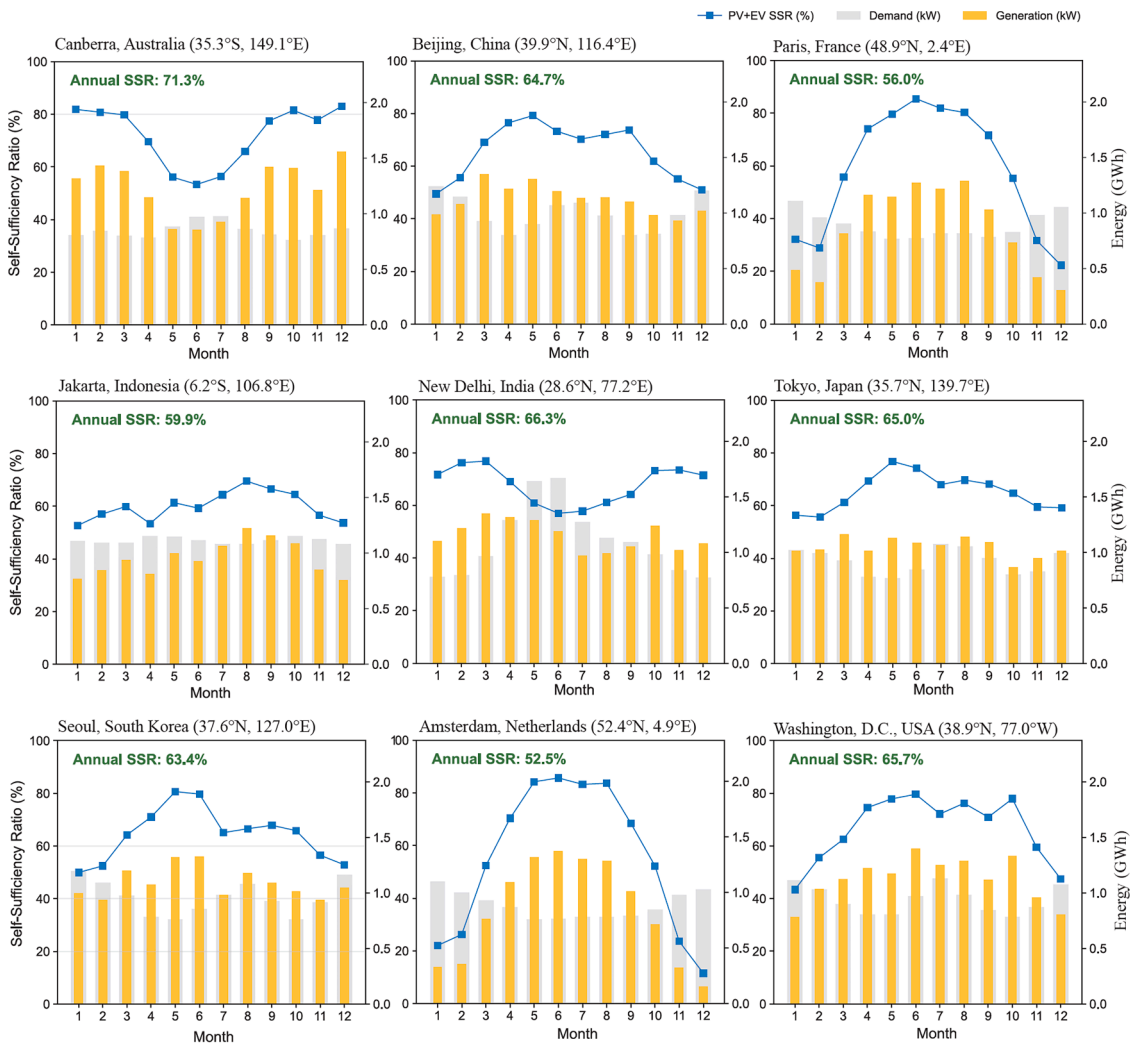

Fig. 4. SolarEV City potential at the locations of selected national capitals. A common urban energy-system configuration was applied across all cities so that the resulting differences primarily reflect local climatic effects on electricity demand and PV generation. SSR indicates self-sufficiency rate. Blue lines and markers indicate monthly SSRs calculated from the hourly demand-supply balance. Yellow bars indicate monthly PV generation, and gray bars indicate monthly demand.

large numbers of heterogeneous assets to operate as a coherent urban energy system.

3.3.1. Maximizing urban PV generation and integrating SolarEV infrastructure into urban design

Rooftop PV systems should be treated as essential urban energy-generation infrastructure because they enable renewable electricity to be produced close to buildings, transport demand, and existing distribution networks [14] without requiring additional land [65]. Maximizing energy generation from existing and new urban surfaces should therefore be a central objective of sustainable urban development. High-efficiency silicon, tandem, and perovskite PV technologies, and building-integrated photovoltaics (BIPV) [63] expand the range of surfaces that can contribute to this objective [66]. Roofs, façades, transparent PV glazing, solar canopies, parking facilities, and public buildings can collectively form a distributed urban-generation system. Geographic information system (GIS) and three-dimensional building assessments can support effective deployment by considering orientation, shading, structural conditions, roof geometry, access requirements, and surrounding urban form [67]. Community and shared-solar arrangements can further extend participation to residents who do not individually control a suitable roof [68].

The gap between nominal and currently deployable rooftop area should be treated not as a fixed constraint but as a central urban-design challenge for SolarEV Cities. Full utilization of rooftop surfaces for energy generation will require continued PV cost reduction [63], PV-ready building codes, improved rooftop-access and equipment-layout standards, structural retrofit support, streamlined permitting [67], and collective ownership or management schemes [68,69]. In the medium to long term, coordinated building heights, spacing, orientation, and roof slopes can reduce inter-building shading and expand suitable roof and façade surfaces [70], supporting the target of using at least 70% of total rooftop area for PV [14]. This requires a broader transformation in how cities are designed, renovated, and constructed, so that roofs, façades, canopies, and other built surfaces progressively become part of the energy infrastructure of future sustainable cities.

Different urban forms require complementary implementation pathways. Detached-house suburbs can provide early opportunities because they commonly combine larger roof areas, private vehicles, and off-street parking [44]. Dense commercial centers and apartment districts require different solutions, including façades, collective roofs, public buildings, solar canopies, shared charging, sub-metering, building-energy management, and neighborhood energy systems [31]. Electricity exchange among buildings, community storage, and VPP aggregation can connect areas with different generation and demand profiles and extend the value of rooftop PV beyond individual-building self-sufficiency [35].

Differences among the daily profiles of PV generation, electricity

demand, and vehicle use create opportunities for coordinated operation. Rooftop PV normally reaches its highest output around midday, whereas residential vehicle charging frequently occurs after the evening commute [71]. Smart scheduling can align these profiles by directing charging toward periods of high renewable production and using stored electricity when demand subsequently rises [71]. Workplace and commercial-fleet charging are particularly well matched to daytime PV generation because vehicles are frequently parked during solar-production hours [71–76]. Residential systems can complement this pathway through smart charging based on expected departure times and required battery state of charge, combined with V2H, stationary storage, and neighborhood electricity exchange [77].

SolarEV infrastructure should therefore be incorporated into urban design from the beginning rather than added independently after buildings and transport systems are established [70]. New developments can integrate PV-oriented roofs and façades, EV-ready wiring, communication infrastructure, appropriately sized transformers, and space for shared charging and storage. Solar canopies over parking areas, depots, walkways, and public facilities can provide electricity generation, weather protection, and charging services through the same urban structure [78]. Three-dimensional urban models and digital twins can support this planning when sufficiently accurate building, mobility, and network data are available [70,79,80]. Feeder-specific electrical assessment can then complement these tools by identifying the operational requirements of each local distribution network. Integration potential should ultimately be evaluated using vehicle connection probability, dwell time, charger power, usable state of charge, mobility reserve, PV-charging coincidence, and feeder conditions rather than installed PV and EV capacity alone [71,81–83].

3.3.2. *EVs as flexible distributed energy resources*

EVs can operate as flexible distributed energy resources (DERs) connecting renewable generation, mobility, buildings, and electricity networks. Managed unidirectional charging, or V1G, shifts charging to periods that align with PV availability, mobility requirements, electricity prices, and local network conditions [72,73,84]. V2H and V2B supply buildings behind the meter, while V2G enables electricity export and participation in grid services [84–88]. Aggregated EV fleets can support renewable-energy absorption, peak management, demand response, frequency services, reserve capacity, and emergency electricity supply [35]. Modeling indicates that coordinated charging can meet approximately 13–92% of EV electricity demand directly from solar generation, depending on charging availability, seasonality, and system configuration [71]. Modeling also suggests that coordinated charging and discharging can reduce peak demand by up to approximately 44% under favorable conditions [89–91]. Commercial fleets, buses, delivery vehicles, and workplace vehicles provide promising early applications because their connection schedules and mobility reserves can be managed predictably [72,92]. Private vehicles can provide additional flexibility when control systems respect connection duration, desired state of charge, expected departure time, and driving requirements [93,94].

V1G provides a practical initial pathway because it can deliver substantial load-shifting value using unidirectional charging equipment [95]. V2G can then add services that require electricity export, including reserve provision, local network support, and emergency power. A staged progression from unmanaged charging to V1G, V2H/V2B, and aggregated V2G allows technical capability, user confidence, and market arrangements to develop incrementally. Charging control can preserve a predefined driving reserve, expected departure state of charge, and user override option while making the remaining flexibility available to the energy system [94]. Subsequent socio-economic sections examine the economic value, business models, institutional arrangements, compensation mechanisms, and participation implications of these technical configurations.

3.3.3. *Interoperable and digitally coordinated bidirectional-charging systems*

Full bidirectional operation requires coordination across several layers: the physical connector and power electronics; vehicle–charger communication; charger–backend communication; utility interconnection and protection; metering and settlement; and aggregator interfaces [96,97]. Compatibility across these layers enables vehicles from different manufacturers to participate in common building, neighborhood, and grid services. CHAdeMO demonstrated the value of early direct-current (DC) bidirectional standardization by supporting commercial V2H deployment in Japan [96] (Table 3). Its operational experience provides an important foundation for the development of wider bidirectional-charging ecosystems. The Combined Charging System (CCS) and ISO 15118-20 provide an expanding pathway for bidirectional power transfer, secure authentication, and advanced energy-management functions [97]. Full implementation requires compatible reversible power electronics, metering, cybersecurity credentials, backend software, and grid-interconnection approval. These requirements provide a practical roadmap for progressively expanding V2G capability across future vehicle and charger generations.

China's GB/T system and the ChaoJi architecture provide another large-scale pathway for high-power and bidirectional charging [98]. The North American Charging Standard (NACS)/SAE J3400 is also expanding as a physical charging interface in North America [99]. Harmonizing communication, certification, grid codes, warranties, cybersecurity, and settlement across these ecosystems can preserve connector diversity while enabling system-level interoperability. A practical near-term objective is therefore functional interoperability rather than immediate adoption of a single global connector. Common requirements for secure authentication, state-of-charge exchange, availability, mobility constraints, metering accuracy, power quality, and grid-support functions can create a shared operational language across charging ecosystems [96,97]. End-to-end conformance testing of the complete vehicle–charger–platform–grid chain can accelerate deployment and support mixed-manufacturer aggregation.

Digital coordination enables vehicles, chargers, PV inverters, storage systems, buildings, aggregators, and distribution networks to operate as one responsive system. Advanced metering, short-term forecasting, departure-aware optimization, automated demand response, and VPP platforms provide the principal control functions [62,64]. Open interfaces can support interoperability among utilities, aggregators, automakers, charging providers, and building-energy systems. Cybersecurity and privacy should be embedded as core design features rather than added after deployment. Secure device authentication, encrypted communications, controlled software updates, role-based access, anomaly detection, network segmentation, and safe fallback

Table 3
Principal bidirectional-charging ecosystems and integration pathways.

Ecosystem	Main regions	Bidirectional foundation	Current integration pathway
CHAdeMO	Japan and legacy global markets	Established DC bidirectional charging and commercial V2H	Extend established operational experience and compatibility with wider platforms
CCS / ISO 15118-20	Europe, North America, and expanding global markets	Defined bidirectional communication and energy-management functions	Coordinate vehicle hardware, chargers, backend platforms, certification, and interconnection
NACS / SAE J3400	North America	Rapidly expanding physical interface	Develop bidirectional communication, export certification, and backend integration
GB/T–ChaoJi	China and linked markets	Large-scale high-power ecosystem with bidirectional development	Expand end-to-end interoperability and international conformance testing

operation can support reliable aggregation at scale [100]. Clearly allocating responsibility among automakers, charger providers, aggregators, utilities, and building operators strengthens accountability [100]. Data minimization, informed user consent, and auditable control rights can enable operational coordination while protecting household and mobility information [101].

3.3.4. Grid constraints and digital infrastructure

Distribution-network hosting capacity is the amount of distributed generation and flexible demand that can be connected while maintaining voltage, thermal, protection, and power-quality requirements [102,103]. It varies with feeder impedance, transformer rating, phase allocation, resource location, background demand, charger rating, and operating behavior. Hosting capacity should therefore be treated as an actively managed system capability rather than a fixed external limit [103,104]. A review of low-voltage PV networks found that overvoltage accounted for approximately 48% of reported hosting-capacity constraints, while thermal overload and voltage unbalance accounted for approximately 26% and 19%, respectively [102]. These findings indicate where active voltage control, coordinated charging, monitoring, storage, and targeted reinforcement should be prioritized. Midday PV exports can increase feeder voltage and reverse power flow, while concentrated EV charging can add local transformer and feeder loading [95,105–108]. Modern protection settings, directional relays, inverter ride-through functions, phase balancing, and network monitoring can adapt distribution systems to bidirectional electricity flows and inverter-based resources [103,109]. These measures allow distribution networks to evolve from passive electricity-delivery systems into actively managed platforms for distributed generation and flexible demand.

A California-wide assessment estimated that uncontrolled charging could require upgrades to approximately 67% of distribution feeders by 2045, equivalent to around 25 GW of additional capacity and USD 6–20 billion in investment [108]. This result underscores the value of managed charging, local flexibility, and anticipatory planning from the beginning of EV deployment. Coordinated operation can reduce, defer, or better target reinforcement while directing investment to locations where additional physical capacity is required. PV and EV deployment should be planned jointly because daytime vehicle charging can absorb locally generated electricity that would otherwise be exported, while V1G and V2G can reshape evening demand [104,110]. This complementary operation can increase both the local value of rooftop PV and the effective capacity of the distribution network.

Smart-inverter functions, including Volt/VAR and Volt–Watt control, can increase PV hosting capacity by adjusting reactive power and active export in response to local voltage conditions [111]. In one feeder study, Volt/VAR control increased PV hosting capacity by up to 91% [111]. Another benchmark study reported an increase in admissible PV generation from 17% to 100% of the feeder thermal limit [112]. Although the exact gains are feeder-specific, these studies demonstrate the substantial capacity that active control can unlock. EV charging coordination provides a similar opportunity. In one assessed network, time-of-use charging increased EV hosting capacity from 10% under uncontrolled charging to 70% [95]. Optimized control of EV aggregators and V2G resources has also increased DER accommodation in distribution-system studies [113–115]. Price-based charging can be strengthened by incorporating feeder-aware and locational constraints. A Swedish residential-network study found that, when local constraints were ignored, price-responsive V2G created new peaks above approximately 20% EV penetration; feeder-aware coordination minimized peak loading at approximately 30–40% penetration [116]. This provides a clear design principle for aggregators: wholesale-price optimization should be combined with transformer and feeder constraints [113,114].

Distribution-grid hosting capacity is therefore a central innovation priority for SolarEV City. Smart charging, V2H/V2G, smart-inverter control, distributed storage, transformer monitoring, community energy management, and targeted reinforcement can jointly expand the effective capacity of existing networks. Time-series and probabilistic power-flow analysis can support this transition by jointly representing PV production, household demand, vehicle availability, charging schedules, mobility reserves, inverter control, storage, and network investment [103,104,110]. Evaluations should report voltage performance, thermal loading, electrical losses, PV utilization, mobility requirements, battery throughput, reliability, and deferred infrastructure investment.

3.3.5. Battery-lifecycle optimization and complementary system resources

Aggregated EV batteries provide a large, distributed resource for short-duration storage and can reduce but not eliminate the need for separately installed stationary batteries [117]. EVs and home batteries are complementary. At the system level, EV storage can scale with the growing vehicle fleet because the batteries are already purchased for mobility, whereas stationary storage requires additional batteries and dedicated investment. However, usable EV flexibility depends on bidirectional chargers, interoperability, user participation, aggregation, and vehicle availability; stationary batteries provide more predictable, continuously connected capacity. The value of SolarEV lies not in EV storage being universally superior, but in unlocking the expanding EV battery fleet to absorb surplus rooftop PV, support greater PV deployment, and increase urban energy self-sufficiency while limiting unmanaged charging impacts and additional investment in stationary storage.

The expanding battery fleet also creates a strong incentive to develop circular supply chains for lithium, nickel, cobalt, graphite, and other battery materials [118]. Improved durability, material-efficient chemistry, recycling, remanufacturing, and second-life applications can progressively increase the resource efficiency of SolarEV systems. EV batteries are particularly well suited to intraday balancing, solar self-consumption, peak management, and short-duration grid services. Longer renewable-energy variations can be addressed by combining them with generation diversity, interconnection, demand flexibility, stationary storage, and long-duration storage. Dutch PV production, for example, can differ by approximately 75-fold between a sunny summer day and a cloudy winter day, while monthly averages differ by approximately fivefold [119]. Such variability shows that EV batteries are best used as flexible, short-duration storage within a broader portfolio that combines diversified renewable generation, such as wind power, with stationary and longer-duration storage depending on local resource availability.

Battery-lifecycle management provides another opportunity for intelligent control. Battery degradation results from both cycling and calendar aging [120]. V2X algorithms can manage C-rate, depth of discharge, average state of charge, temperature, and charging time to limit degradation while delivering useful energy services [120–124]. Maintaining a moderate state of charge while parked and completing charging closer to departure may reduce calendar aging and partly or fully offset additional cycling under appropriate operating conditions [121–123]. Thus, the relevant comparison is degradation-aware V2G versus uncontrolled charging, rather than V2G versus no battery use. Battery chemistry can be matched to the intended V2X duty cycle. The comparatively long cycle life of lithium iron phosphate (LFP) cells may, for example, be advantageous for frequent bidirectional operation [121,122]. Active thermal management can maintain suitable operating conditions during charging and discharging [120]. Dispatch algorithms can incorporate chemistry-specific degradation costs, temperature, state-of-health uncertainty, mobility reserves, and conversion efficiency, enabling energy services to be delivered within defined battery-health limits [120–123].

V2G-ready warranties can convert these engineering capabilities into clear and bankable assurances for vehicle owners. They should specify allowable power, depth of discharge, energy throughput, temperature range, and operating conditions [93,94]. Transparent state-of-health

monitoring can verify compliance, support compensation for battery use, and strengthen user confidence. Evidence indicates that well-designed V2X operation can provide energy-system value while maintaining battery health within controlled and measurable limits [120–124]. The technological foundation for SolarEV City is already substantial. Rooftop PV can transform urban surfaces into a major source of local electricity; EVs can provide mobile and distributed flexibility; smart inverters and coordinated charging can expand effective grid capacity; and interoperable digital platforms can connect assets across buildings, neighborhoods, and cities.

The remaining engineering challenge is integration, optimization, and scaling rather than the invention of entirely new component technologies. Three priorities can accelerate implementation. First, urban planning and building design should maximize rooftop, façade, canopy, and other built-surface generation while jointly considering vehicle access and charging availability. Second, bidirectional-charging certification should cover the complete vehicle–charger–backend–grid chain and support mixed-manufacturer aggregation [96,97]. Third, distribution planning should compare and combine smart charging, smart-inverter control, V2G, local storage, monitoring, and targeted physical reinforcement [112–116]. With these measures, urban form, vehicle mobility, and network operation can become complementary components of a coordinated renewable-energy system.

3.4. Economic, policy, and social factors

Although technological advances provide the foundation, scaling SolarEV Cities depends on aligning economic, policy, and social conditions. The main barriers lie less in technical feasibility than in weak economic structures, regulatory misalignment, and social and equity challenges. These barriers are institutional as much as technological: value must be allocated among households, EV owners, aggregators, utilities, municipalities, and society; policy frameworks must connect rooftop PV, EVs, buildings, distribution grids, and electricity markets; and participation must extend beyond high-income homeowners.

3.4.1. Economic viability and business models

At the microeconomic level, individual adoption is driven primarily by cost savings from maximizing the self-consumption of rooftop PV generation, particularly in regions with time-differentiated electricity tariffs. However, high upfront costs for PV systems, EVs, and the premium for bidirectional electric vehicle supply equipment (EVSE) can delay adoption, particularly among households and buildings with limited access to capital (although significant future cost reductions are expected [31]). Consequently, economic viability depends on converting stacked system value into durable actor-level revenues. However, peer-reviewed evidence of realized revenues remains limited. A Danish field study demonstrated that ten electric vans provided frequency-controlled normal-operation reserve, but did not quantify annual revenue or net profit [125]. Using measured profiles from 468 German commercial vehicles and historical 2020 market prices, simulations estimated annual gross frequency-containment-reserve revenue of €220 per vehicle for randomly composed pools and €378 for optimized pools, before aggregator, bidirectional-charger, and battery-degradation costs [126]. For a typical German household, modeled annual electricity-cost reductions relative to unmanaged charging were €310 for V2H and €530 for combined V2H and V2G arbitrage; the latter excluded electricity taxes and duties [127]. At the then-current charger cost assumed in the study, the annualized additional bidirectional-charger cost (€469) exceeded the V2H benefit, excluding installation and vehicle costs [127]. A meta-analysis of 340 cases found reported economic benefits ranging from −€300 to €4,140 per vehicle-year [128]. Thus, the funding gap lies between gross benefits and net user income after charger, installation, metering, aggregation, energy-loss, and battery-degradation costs. Current market rules can widen this gap through taxes, minimum bid sizes, and restrictions on combining services.

VPP aggregation and P2P energy trading are important pathways to unlocking additional economic value. VPPs use software platforms to coordinate DERs, including EV fleets, rooftop PV, stationary batteries, and flexible loads, and bid their collective capacity into wholesale energy, capacity, or ancillary-service markets. The resulting revenues can be shared among participants. P2P trading platforms can increase the value of surplus rooftop PV by matching buildings with different generation and demand profiles [129–131]. These transactions operate through the public electricity network and do not replace its essential balancing and mutualization functions. However, both VPP and P2P models currently face substantial barriers, including inequitable market access for small-scale distributed resources, inadequate compensation mechanisms, unclear roles for new market actors such as aggregators, and regulatory inertia. Clear metering, baselines, settlement rules, and benefit-sharing mechanisms are therefore required to turn physical flexibility into usable economic value.

3.4.2. Policy fragmentation and integrated governance

Policy and regulatory frameworks strongly shape the pace and direction of the SolarEV City transition. Historically, however, rooftop PV and EV policies evolved along separate tracks, hindering their integration. Global rooftop PV policies have progressed from feed-in tariffs, subsidies, tax credits, and net metering toward market participation, dynamic pricing, and blended policy portfolios [132–140]. Similarly, global EV policy has shifted from direct purchase subsidies toward charging infrastructure, manufacturer mandates, non-fiscal incentives, industrial policy alignment, and carbon-linked incentives [141–146]. These policies have accelerated PV and EV adoption individually, but they have not yet created an integrated framework for buildings, transport electrification, distribution networks, flexibility markets, and urban planning.

This separate development has created a critical “regulatory gap” or “policy void” concerning the integrated operation of PV and EVs, particularly regarding V2G functionalities. V2G implementation lies uneasily at the intersection of transportation policy (governing vehicle standards and markets) and energy policy (governing grid interconnection and electricity markets), domains often managed by different agencies with distinct mandates and regulatory cultures. This creates three key challenges.

First, existing grid interconnection standards were predominantly designed for stationary generators, lacking clear, streamlined, and cost-effective procedures for connecting millions of mobile, bidirectional storage devices (EVs) [147]. Second, utilities often lack established V2G protocols and business models. Concerns about grid safety, stability, and power quality can lead to cautious and complex approval processes, while unclear rules hinder fair compensation for the grid services provided by EV owners and aggregators, from fast frequency response to capacity provision. Third, discharging electricity back to the grid can conflict with existing retail electricity contracts or create ambiguous taxation implications, thereby eroding the economic incentive for participation. SolarEV policy must therefore clarify interconnection procedures, aggregator licensing, metering and settlement rules, tariff design, consumer protection, taxation, warranty interfaces, and ownership of flexibility value.

As EV adoption matures, governments are addressing this regulatory gap through diverse and often fragmented approaches to V2G integration. China exemplifies a top-down, pilot-driven model, enforcing national standards while initiating large-scale trials augmented by specific local incentives [148–150]. The US combines federal initiatives with pioneering yet inconsistent state-level regulations (e.g., California’s bidirectional mandate) within a highly fragmented utility landscape [151,152]. Germany employs a hybrid approach, mandating grid-controllable charging capabilities while providing premium subsidies for bidirectional hardware [153,154]. The UK focuses on enabling market participation through tariff structures, including time-of-use

(TOU) rates for alternating-current (AC) V2G [155], while France leverages enterprise alliances within a more centralized energy system structure [156,157]. Ongoing regulatory uncertainty and the lack of harmonized frameworks continue to slow the commercial rollout of V2G services worldwide. These examples show that SolarEV policy will remain context-specific, but all pathways require stronger alignment between mobility regulation, electricity-market design, and distribution-network planning.

Regulatory fragmentation and policy inertia constitute central bottlenecks to scaled deployment [158]. While national-level policies, such as Japan's 2050 carbon neutrality goal or the US Inflation Reduction Act, create crucial landscape-level pressure on existing socio-technical regimes, national governments often lack the context-specific knowledge and multi-stakeholder connections to steer complex urban transitions alone [55]. Realizing the SolarEV City vision therefore requires integrated urban governance that overcomes sectoral fragmentation across energy, transportation, and land-use authorities [159]. This includes updating building codes for solar PV and EV readiness, reforming zoning for distributed infrastructure, and fundamentally reorienting utility planning processes to embrace DERs as core grid resources. Local implementation platforms involving municipalities, utilities, automakers, aggregators, building owners, and communities can help coordinate investment and allocate costs and benefits transparently.

3.4.3. Social acceptance and energy justice

Ignoring the social dimension threatens both the long-term viability and legitimacy of the SolarEV City transition. Consumer adoption of V2G, even with financial incentives, faces significant behavioral barriers. Potential users remain particularly concerned about accelerated battery degradation and voided manufacturer warranties [93,94]. While research suggests intelligent V2G management could mitigate net degradation by optimizing battery state-of-charge and reducing calendar aging, this evidence is scenario-dependent, whereas users bear the battery risk directly. Manufacturer-backed V2G warranties, transparent state-of-health monitoring, defined operating limits, and compensation for verified incremental degradation are therefore needed to bridge this trust gap [121–124]. Additionally, perceived loss of control over personal mobility, including range anxiety when batteries are discharged for grid services, and data privacy concerns associated with sharing charging data require user-centric control interfaces and trustworthy data governance frameworks [94]. Minimum battery-charge guarantees, user control options, clear information on battery health and payments, and transparent data-use rules can increase trust and encourage participation. Social acceptance is therefore partly an engineering and institutional design problem, not only a matter of consumer attitude.

A central challenge is ensuring that the transition aligns with the principles of energy justice [160]. The predominant SolarEV City model, often centered on single-family homeowners with private driveways and sufficient capital, risks excluding renters, residents of multi-unit dwellings, and low-to-moderate-income households, thereby worsening existing energy inequities [68]. Recent evidence from California further shows that Black and Hispanic residents, particularly those in renter- and multifamily-heavy communities, have significantly lower competition-adjusted access to public EV charging, even after accounting for income, population density, and housing characteristics [161]. This could create a socially stratified, "two-tiered" energy system in which affluent "prosumers" capture the benefits (lower bills, V2G revenues, resilience) while vulnerable populations remain reliant on a potentially more strained public grid and may bear a disproportionate share of system upgrade costs. Addressing this equity gap requires V2G-ready building codes for multi-unit dwellings, municipal procurement of bidirectional curbside and public chargers in underserved areas, subsidies for electrical upgrades in shared parking, sub-metering and opt-in aggregation, and rules that return flexibility revenues to participating residents. Community-solar subscriptions can provide access to PV benefits, while shared V2G hubs at apartments, workplaces, public parking facilities, and mobility hubs provide access to bidirectional flexibility. These measures should incorporate procedural, distributive, and recognition justice [68,162]. A socially robust SolarEV City is therefore not only a technically optimized system but also an inclusive urban-energy platform that distributes economic and resilience benefits broadly.

In summary, climate and urban form establish physical potential, technology enables controllability, economics and policy determine operational viability, and society shapes legitimacy and distribution. Systemic integration therefore requires alignment across all six dimensions.

4. Comparative national pathways

SolarEV City development varies markedly across countries (Table 4), reflecting differences in national energy systems, policy priorities, market structures, technological legacies, urban forms, and socio-economic contexts. Rather than converging toward a single implementation model, distinct national pathways are emerging. The nine-country comparison identifies how different technological, urban, economic, and institutional conditions shape SolarEV City pathways rather than ranking countries by overall readiness. This cross-case synthesis reveals distinct development archetypes and underscores the persistent PV-EV integration gap despite rapid adoption of each technology.

4.1. Comparative methodology

The comparison uses common country-level indicators to structure the subsequent country-by-country analysis. Table 4 summarizes population, electricity consumption per capita, rooftop PV capacity per capita, PV share of electricity generation, EV share of new vehicle sales, dominant bidirectional-charging interface, and V2H/V2G maturity for the nine selected countries. These indicators represent four conditions central to SolarEV City development: the scale of the energy-system challenge, the maturity of distributed solar deployment, the progress of transport electrification, and the availability of technical and institutional interfaces for PV-EV integration.

The indicators should be interpreted as diagnostic variables rather than as a composite ranking. A country may have high rooftop-PV penetration but low EV adoption, high EV sales but limited bidirectional-charging infrastructure, or commercial V2H availability without mature V2G market participation. The comparison therefore focuses on alignment among the six socio-techno-economic dimensions introduced in Section 2: climate, urban structure, technology, economics, policy, and society. This approach explains why PV and EV markets can grow rapidly while integrated SolarEV deployment remains slower and more path-dependent.

The nine countries were purposively selected to capture variation in geographic region, income level, urban form, PV and EV deployment, bidirectional-charging maturity, market structure, and governance; they do not constitute a statistically representative sample. They were not selected to fit predefined archetypes, which emerged from the subsequent comparison. The sample is illustrative rather than exhaustive; Germany, Norway, and other important markets were omitted to balance international breadth with sufficient analytical depth. Section 4.2 compares the countries according to their principal deployment units, coordination mechanisms, integration gaps, and next transition steps. The development archetypes and transition implications are synthesized after the country analysis in Section 4.3.

4.2. Comparative country analysis

4.2.1. Australia

Australia has one of the highest rates of rooftop PV adoption in the world [169], although EV uptake and the broader electrification of

Table 4
Country-level indicators for comparing SolarEV City development. EV includes battery electric vehicles (BEVs) and plug-in hybrid electric vehicles (PHEVs). The principal data providers are the World Bank [163], U.S. Energy Information Administration [164], and BloombergNEF [165–167]. The indicators are used for cross-country comparison and do not constitute a single overall ranking.

	Population in 2024 (million) [163]	Electricity consumption per capita in 2024 (kWh yr^{-1} $person^{-1}$) [164]	Rooftop PV installed capacity per capita in 2024 (kW $person^{-1}$) [168]	PV share of electricity generation in 2024 (%) [167]	EV share of new vehicle sales in 2024 (%) [165]	Dominant bidirectional-charging interface	V2H/V2G maturity
Australia	27	9,447	0.97	18.9	9.8	CCS2 Piloting, CHAdeMO available	Pilot
China	1,409	6,951	0.29	8.7	48.1	GB/T Piloting, ChaoJi in development	Pilot
France	69	5,976	0.18	4.2	27.3	CCS2 (ISO 15118) Commercial	Commercial
India	1,451	1,211	0.02	6.7	2.6	CCS2/CHAdeMO Piloting	Nascent
Indonesia	284	1,327	< 0.01	0.4	6.6	CCS2/CHAdeMO Piloting	Nascent
Japan	124	6,925	0.43	11.0	3.0	CHAdeMO Commercial	Commercial (V2H)
Netherlands	18	6,130	0.95	17.1	48.9	CCS2 (ISO 15118) Commercial	Commercial
South Korea	52	10,779	0.08	6.1	10.7	CCS2/CHAdeMO Piloting	Pilot
U.S.	340	12,332	0.19	6.4	10.6	CCS1 / NACS (SAE J3400), CHAdeMO available	Pilot/Early commercial

transport remain at an early stage. By 2025, more than 4 million rooftop PV systems (totaling 29 GW) were installed on 40% of households [170], which together generated 14% of Australia's electricity [171]. Household battery adoption has accelerated significantly since mid-2025, with at least 9.4 GWh of storage installed across 340,000 homes [170]. Battery electric vehicle sales also rose from 3% of new car sales in 2022 to 12% in early 2026 [172], with an estimated nationwide fleet of over 340,000 vehicles [173]. Together these trends have created the basis for a rooftop-PV-led residential-flexibility pathway in which households increasingly combine electricity generation, storage, transport, and demand management.

Australia's net-zero by 2050 pathway relies heavily on the decarbonization of the electricity sector and aims to reach 82% renewable electricity by 2030. The Capacity Investment Scheme [174] and renewable portfolio standard [175] support utility-scale renewable deployment, while household DER investment is encouraged through upfront cost subsidies from the Small-scale Renewable Energy Scheme [176] and Cheaper Home Batteries program [177]. Despite this progress, fossil fuels remained prominent in 2025: coal and gas supplied 50% and 7% of total generation, respectively [171], resulting in an overall grid emissions intensity of 633 gCO_2e /kWh [178]. Coordinating EV charging with rooftop PV and periods of lower-carbon grid supply is therefore important for maximizing the emissions benefits of transport electrification.

EV adoption is increasing but remains well behind rooftop PV adoption. Policies such as the New Vehicle Efficiency Standard [179] have been introduced to encourage transport electrification. Public charging infrastructure lags most other OECD countries [5], partly reflecting Australia's low population density and early stage of EV adoption. Most charging occurs at home [173], making detached homes with rooftop PV the most suitable setting for the initial deployment of V2H and residential V2G. Bidirectional charging is moving from small trials toward early residential deployment, although the availability of compatible vehicles, chargers, certification pathways, and grid-connection procedures remains limited. Electricity retailers such as Origin [180], AGL [181], and Amber [182] have conducted projects to test the value of bidirectional charging at scale. A national roadmap for bidirectional charging was released in 2025 [183], reflecting growing recognition of EVs as flexible energy resources rather than simply transport assets. Historically, V2G development relied heavily on CHAdeMO-equipped vehicles [184]. The longer-term market is expected to develop around Australia's increasingly dominant CCS2 interface and ISO 15118-20-based communication, although interoperable CCS2-based V2H and V2G are not yet commercially available [185].

Australia's widespread rooftop PV produces substantial midday generation, creating increasingly pronounced "duck curve" conditions with periods of very low or negative wholesale electricity prices [186]. Distribution networks are also experiencing local congestion and voltage management issues, leading to export limitations and occasional DER curtailment [187]. Smart meters, dynamic export limits, inverter requirements, and established VPP frameworks provide a basis for aggregating household batteries and EVs [188,189]. However, Australia-specific certification and interconnection requirements can delay commercialization by requiring imported bidirectional products to be redesigned or recertified. For households, the immediate value lies in increasing PV self-consumption and lowering electricity costs, with potential additional benefits from grid-service revenues. Participation in VPPs may nevertheless be constrained by uncertain compensation, concerns over vehicle availability, battery degradation and warranties, and reluctance to delegate charging control to aggregators [190]. Equity is also important because rooftop PV and private charging are concentrated in owner-occupied detached homes, while renters, apartment residents, and lower-income households have limited access. A pathway based only on individually owned homes could therefore entrench existing inequalities.

Overall, Australia follows a rooftop-PV-led residential-flexibility pathway. Its high solar resource, suburban housing stock, widespread vehicle ownership, and consumer-led DER investment favor integration at detached homes rather than public charging hubs or centrally managed fleets. Households, retailers, aggregators, network operators, and governments are the principal actors, but coordination remains fragmented across individual investment decisions, retailer programs, state-level connection rules, and national electricity-market arrangements. System planners increasingly expect flexible household resources, including rooftop PV, batteries, and EVs, to complement utility-scale renewable energy generation [191]. By the mid-2040s, household batteries and EVs participating in VPPs could exceed utility-scale battery capacity, and by 2050 consumer resources may provide more than half of grid dispatchable capacity [191]. The central challenge is therefore the transition from individual behind-the-meter optimization to

coordinated residential flexibility that can increase household savings, absorb rooftop-PV surpluses, relieve distribution-network constraints, and provide system-wide services.

4.2.2. China

China's energy transition combines unparalleled scale with strong centralized policy directed toward its "dual carbon" targets of carbon peaking before 2030 and carbon neutrality before 2060 (Fig. 5). China is the world's largest case of parallel solar PV and electric-vehicle scale-up. By the end of 2025, cumulative installed PV capacity had reached ~1,200 GW, including about 530 GW of distributed PV, mainly rooftop and commercial-industrial systems [192]. Feed-in tariffs initially accelerated deployment [193], but declining costs and the phase-out of central subsidies after 2019 shifted the sector toward more market-oriented growth [194]. The national dual-carbon targets further repositioned PV from a subsidized technology to a core component of China's emerging power system.

China has also become the world's largest electric vehicle market. In 2025, new-energy-vehicle (NEV) sales reached 16.6 million units, accounting for more than 50% of new vehicle sales, while the national NEV stock reached ~34 million vehicles [195]. Charging infrastructure expanded in parallel to 20.1 million charging piles by the end of 2025 [196]. This combination of a large EV fleet, extensive charging infrastructure, and rapidly expanding distributed PV provides the basis for a state-led aggregated V2G pathway focused on peak management, renewable-energy integration, and system balancing. China's SolarEV development follows a top-down, hierarchical policy pathway. National authorities first establish strategic priorities, technical standards and pilot frameworks, while provinces and cities translate these central signals into local regulations, incentives, and demonstration projects according to local grid conditions and industrial capacity. This structure enables rapid and coordinated experimentation, although implementation and commercial readiness still vary across regions.

Within this framework, SolarEV integration remains at an early but increasingly institutionalized demonstration stage. The first batch of national large-scale vehicle-grid interaction pilots included nine cities and 30 projects across major urban areas such as Beijing, Shanghai, Shenzhen, Guangzhou, Nanjing, Wuxi, Qingdao and Wuhan [197]. The projects cover city-level aggregation platforms, battery-swapping stations, residential charging aggregation, public charging hubs, and integrated PV-storage-charging systems [198]. Their principal deployment units are therefore charging hubs, residential compounds, industrial parks, and public or commercial fleets rather than individual household V2H systems. Shenzhen provides a representative example. The Lianhuashan station combines PV, storage, high-power charging, bidirectional operation, and VPP participation, with 27 V2G-enabled chargers and 46 vehicles [199]. The Guangming Hongqiao Park station similarly integrates rooftop PV, storage, 23 V2G chargers, and connection to the Shenzhen VPP Management Center [200]. These projects illustrate China's emphasis on station-level and city-level aggregation.

China's technical framework is evolving from conventional charging toward bidirectional charging, high-power charging, and grid-level aggregation. At the vehicle–charger level, China primarily follows the GB/T system. The updated GB/T 27930-2023 protocol supports bidirectional charging and discharging, while GB/T 34657.1-2025 and GB/T 34658-2025 provide interoperability and communication-conformance testing. GB/T 46148-2025, effective from March 2026, provides an equipment-level basis for orderly charging, V2G and V2H applications [201].

ChaoJi represents China's next-generation high-power direct-current charging pathway. It is advancing toward standardization and industrial application, with an emphasis on high charging power, safety, and compatibility with existing charging systems [202]. Internationally, ISO 15118-20 provides a separate communication pathway for bidirectional charging and Plug & Charge functions [203]. Differences in communication architecture, authentication, payment, data exchange, and grid-control interfaces nevertheless continue to constrain interoperability between China's GB/T ecosystem and ISO 15118-based ecosystems [204]. At the system level, VPPs provide a mechanism for aggregating EV charging loads, distributed PV, and storage, but end-to-end integration among vehicles, chargers, aggregation platforms, grid dispatch, and market settlement remains incomplete. National targets call for more than 20 GW of adjustable VPP regulation capacity by 2027 and more than 50 GW by 2030, although deployment remains predominantly pilot-based [205]. The principal technical barrier is therefore not the absence of standards, but incomplete alignment across the vehicle-charger-aggregator-grid chain. Much of the installed infrastructure remains unidirectional, while V2G additionally requires compatible battery-management systems, metering, cybersecurity, dispatch interfaces, and settlement arrangements [204,206].

The economic value of V2G is highly context dependent. At the system level, it can support peak shaving, valley filling, and renewable-

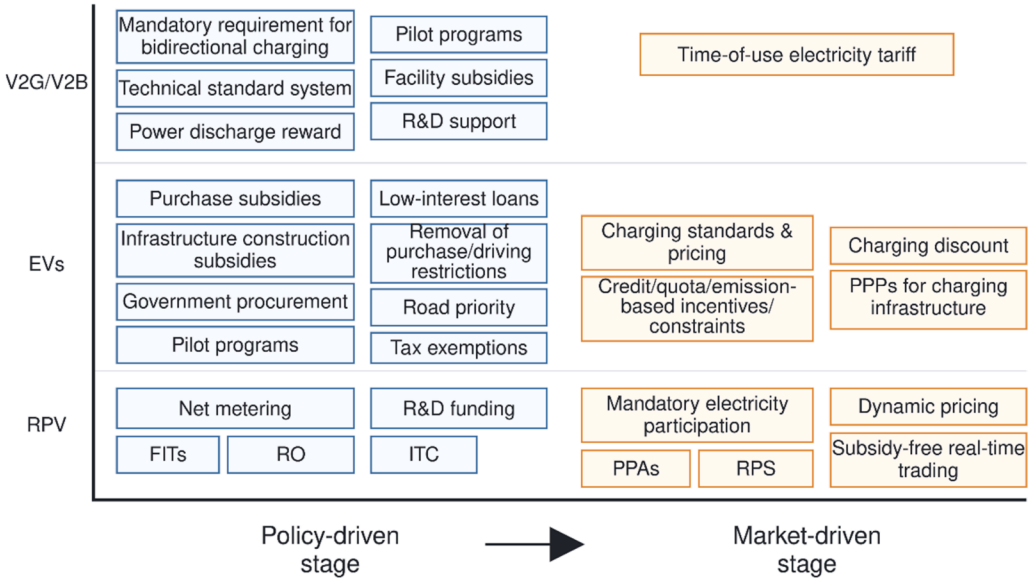

Fig. 5. Summary of Chinese policies. RO: Renewables Obligation. PPAs: Power Purchase Agreements. RPS: Renewable Portfolio Standards. PPPs: Public-Private Partnerships. ITC: Investment Tax Credit. R&D: Research and Development. RPV: Rooftop PV.

energy integration. However, private users may face battery degradation and limited discharge revenues, while areas with concentrated EV charging or high PV penetration may require distribution-grid reinforcement to address transformer loading, voltage fluctuations, and reverse power flows [207,208]. Simple peak–valley arbitrage may therefore be insufficient unless EV aggregation is coordinated with local grid needs and combines multiple value streams. China's likely sequence is unmanaged charging → managed charging → aggregated V2G in microgrids and demonstration zones → broader commercialization after 2030 [209].

Overall, China follows a state-led aggregated V2G pathway. Central government, grid companies, local authorities, automakers, charging operators, and VPP providers coordinate deployment across charging hubs, residential compounds, industrial parks, and fleet depots. The central challenge is to convert large-scale pilots and technical standards into interoperable, economically viable, V2G resources that participate routinely in grid dispatch and electricity-market settlement.

4.2.3. France

France's energy transition is shaped by a power system dominated by low-carbon nuclear generation, which provided ~68% of electricity in 2025 [210]. This low-carbon electricity base shifts the main decarbonization challenge toward electrifying transport and heating. The French BEV market is relatively mature, reaching a 26.8% market share in May 2026 [211], supported by two complementary policy instruments: the CO_2- and weight-indexed penalty scheme, *Le Malus Écologique*, and an environmental incentive scheme, *Le Bonus Écologique*. Rooftop PV deployment is also growing, reaching 16.6 GW of cumulative capacity in 2024 [212], although it remains a much smaller contributor to electricity supply than nuclear generation. The launch of a scalable commercial household V2G service in 2024 established France as an early European frontrunner. The service combined Renault vehicles, Mobilize's energy offer, The Mobility House's aggregation platform, and bidirectional home charging [213]. Its deployment was supported by four complementary conditions: automaker commitment, avoidance of double grid charges on re-exported electricity, widespread Linky smart meters capable of recording bidirectional flows, and a relatively streamlined distribution-system structure centered on Enedis [214].

The French model is therefore distinctive not only because V2G hardware is commercially available, but because the vehicle, bidirectional charger, electricity contract, aggregation service, and market participation are bundled into a single household offer. This arrangement reduces coordination burdens for users and creates a more direct route for monetizing EV flexibility. The Mobility House has subsequently extended similar aggregation technology to partnerships with Volkswagen's Elli and Mercedes-Benz [215,216]. The French deployment has nonetheless revealed significant gaps between projected and realized benefits. Independent user analyses suggest that net financial gains can be considerably lower than the claimed annual saving of approximately €600 [217]. Operational reliability has also drawn criticism from early adopters, with recurring reports of system disconnections and application failures [218]. These problems indicate that commercial availability does not yet guarantee stable revenues, seamless operation, or replication at scale. Vehicle and charger compatibility also remain limited, while the business case depends on tariff design, market-access rules, user availability, and reliable digital control.

Overall, France follows a bundled household V2G service pathway. Its principal development unit is the individual household, and its leading actors are automakers, energy retailers, aggregators, and the distribution-system operator. The primary value proposition is lower charging costs and household participation in electricity markets rather than outage resilience. The central integration challenge is to move from a narrowly compatible early-commercial offer toward reliable, interoperable, and economically durable deployment across a broader vehicle fleet and customer base.

4.2.4. India

India's SolarEV transition combines rapid growth in PV, EV adoption, smart metering, and charging infrastructure, but these developments remain only weakly integrated at the institutional, regulatory, and market levels. The national target of 500 GW non-fossil electricity capacity by 2030 defines the country's decarbonization pathway. By 2026, total non-fossil capacity had reached 288.0 GW, including 154.2 GW of solar capacity, 56.44 GW of wind, 51.41 GW of large hydro, and 8.78 GW of nuclear capacity [219,220]. However, non-fossil sources provided only 29.2% of annual electricity generation in FY2025–26, indicating that coal remains central to firm electricity supply [219]. Grid-connected rooftop solar capacity reached 26.8 GW by April 2026 [220]. The PM Surya Ghar: Muft Bijli Yojana, India's flagship residential rooftop-PV program, had supported nearly 2.39 million households and approximately 7 GW of capacity by December 2025 [221]. Adoption nevertheless remains uneven because of differences in state implementation, financing, roof ownership, income, distribution company (DISCOM) processing capacity, and interconnection procedures [222].

The EV transition has also accelerated, but its structure differs substantially from developed economies. EVs reached approximately 8.5% of total vehicle registrations in India in FY 2025–26, with annual registrations exceeding 2.5 million units [223]. A large share of adoption is concentrated in two- and three-wheelers rather than passenger cars, making the fleet more distributed, lower-capacity, and highly price-sensitive. The public charging network expanded to 29,151 stations by December 2025 [224]. Charging nevertheless remains unevenly distributed and depends heavily on homes, workplaces, fleet depots, shared facilities and informal private arrangements. Projected growth to approximately 600 million urban residents by 2036 will further increase pressure on distributed networks and shared charging infrastructure [225]. SolarEV integration remains nascent. V2G, V2H, and Vehicle to Load (V2L) have not reached commercial scale, and most activities remain limited to pilots and techno-economic assessments. Indian Institute of Technology (IIT) Bombay field trials and Central Electricity Authority (CEA)-linked assessments have established an initial basis for evaluating EVs as distributed storage for peak shaving, PV self-consumption, and grid support [226–228]. However, compatible EVs, bidirectional chargers, certified interoperability protocols, and commercial service frameworks remain limited, leaving the charging ecosystem primarily unidirectional.

Fragmentation persists because rooftop PV, EV charging, distribution planning, urban infrastructure, and electricity-market design are governed through separate institutions and state-level rules [229–231]. Many DISCOMs remain financially constrained and cautious about reverse power flow, transformer overloading, feeder congestion, revenue erosion, and settlement complexity. Smart-meter deployment and time-of-use tariffs may improve coordination, but implementation remains uneven and mature flexibility markets have not yet emerged [232–234]. India's urban form creates a structurally different SolarEV pathway from Australia, Europe, and North America. A large share of urban residents live in apartments, rental housing, informal settlements, mixed-use buildings, and dense neighborhoods where private rooftops, assigned parking, and dedicated EV charging points are often unavailable. The detached-house PV+EV model is therefore less transferable, while apartment charging requires collective approval, parking allocation, fire-safety compliance, metering, and cost-sharing arrangements. India's more plausible near-term pathway is shared and fleet-oriented managed charging through workplaces, depots, community facilities, battery-swapping stations, and aggregated commercial vehicles.

The economic and behavioral barriers are also significant. Two- and three-wheelers have relatively small batteries, limiting the export capacity available from each vehicle, while users are highly sensitive to upfront costs, replacement risks, and warranty conditions. High-temperature operation may further intensify concerns over battery degradation [235–237]. Participation will require adequate

compensation for battery use, battery-health guarantees, warranty protection, cybersecurity safeguards, and clear control rights. The commercial case also remains weak because aggregator licensing, market access, taxation, export settlement, and ownership of exported electricity remain unresolved [230,238].

Overall, India follows a shared- and fleet-oriented managed-charging pathway. Its leading actors are state governments, DISCOMs, municipalities, fleet operators, and charging providers, while the principal deployment units are buses, commercial vehicles, and high-utilization three-wheelers. Broader household V2H or V2G is likely only after metering, interoperability, warranty, compensation, and consumer-protection frameworks are established. The central challenge is to align low-cost solar charging with distribution-grid constraints under conditions of dense urbanization and high affordability sensitivity.

4.2.5. Indonesia

Indonesia, a rapidly urbanizing archipelago, faces the dual challenge of sustaining economic growth while achieving its Net Zero Emissions 2060 target under the National Energy Policy (Government Regulation No. 40/2025). PV has become a cornerstone of this transition, with the renewable energy share targeted to increase from 15.3% in 2024 to 70–72% by 2060 [239]. These targets are supported by PLN's 2025–2034 Power Supply Business Plan (RUPTL) and the Presidential Solar Program, which targets 100 GW of solar PV, including an initial 30 GW deployment coupled with 98.8 GWh of battery energy storage systems (BESS) to improve system reliability and reduce fossil-fuel consumption. Despite these ambitious national targets, rooftop PV deployment remains limited and is primarily driven by industrial consumers seeking lower electricity costs and corporate decarbonization. Consequently, Indonesia currently follows a foundational-growth and integration-by-design pathway. While bidirectional charging (V2H/V2G) offers considerable long-term potential to enhance rooftop PV self-consumption, grid flexibility, resilience, and peak-load management, deployment remains limited to modeling studies, with no field demonstrations [32,240,241].

The primary barriers lie not in technological feasibility but in the lack of enabling socio-techno-economic conditions. Indonesia currently lacks regulatory frameworks for bidirectional electricity transactions, compensation mechanisms for exported electricity, interoperable charging standards, commercially available bidirectional chargers, and distribution-grid readiness for reverse power flow. Consumer acceptance and battery warranty concerns further limit deployment. Consequently, near-term priorities should focus on pilot-scale demonstrations integrating rooftop PV, EVs, and bidirectional charging to establish technical feasibility, regulatory frameworks, and viable business models before large-scale commercialization. Indonesia has substantial long-term potential for SolarEV City development because of its ambitious PV targets, growing EV market, and strong government commitment to decarbonization. However, realizing this potential will require coordinated advances in regulation, grid modernization, bidirectional charging infrastructure, and demonstration projects.

4.2.6. Japan

Japan combines a 2050 carbon-neutrality commitment with a comparatively cautious approach to vehicle electrification. The 2035 target is for 100% of new passenger-car sales to be “electrified”, but this definition includes hybrid electric vehicles (HEVs) as well as BEVs, PHEVs, and fuel-cell vehicles [242]. This technology-neutral policy has sustained strong hybrid markets while reducing pressure for rapid BEV adoption; in 2024, BEVs still represented only about 1.6% of new-car sales [166]. The government nevertheless aims to expand public charging to 300,000 connectors by 2030, including 30,000 high-power fast chargers [166]. In 2025, renewables supplied 26.1% of electricity, nuclear 9.4%, and thermal generation 64.5% [243]. The Seventh Strategic Energy Plan targets a renewable share of 40–50% by FY2040, increasing the value of distributed flexibility and coordinated charging [244].

Rooftop PV is especially relevant because Japan has limited flat land, dense settlement, and growing constraints on large ground-mounted projects. Grid-connected PV capacity had reached approximately 100 GW by 2025, including an estimated 30 GW of cumulative rooftop PV [245,246]. Modeling indicates that extensive rooftop PV combined with EV batteries could achieve average municipal self-sufficiency of about 85% under a high-deployment scenario [15]. Dense urban cores have limited roof and parking space, whereas detached-house suburbs and regional cities have larger roofs, higher vehicle ownership, and more home parking. These areas are therefore the principal deployment locations for residential PV, home charging, and V2H, and could eventually be aggregated to support nearby urban demand centers [56].

Japan is a global pioneer in commercial bidirectional charging. After the 2011 Great East Japan Earthquake and Fukushima accident, disaster resilience became a central household and municipal value proposition. CHAdeMO-based V2H systems were commercialized by firms including Nichicon, Honda, OMRON, and Sharp, supporting PV self-consumption, time shifting, and backup power (e.g., [247]). Earlier projects by Nissan, Toyota Tsusho, Chubu Electric Power, and other partners demonstrated renewable balancing, frequency response, voltage management, and multi-vehicle aggregation [248,249].

A representative 2025 Tokyo demonstration involving Mitsubishi Motors, MC Retail Energy, Nichicon, Kaluza, and Kaluza Japan linked household travel preferences, vehicle state of charge, bidirectional chargers, cloud control, and 30-minute wholesale-price signals [250]. It moved beyond emergency backup by testing automated price-responsive charging and discharging in ordinary households. The project also revealed the practical requirements for broader deployment: reliable multi-company application programming interface (API) connections, user-defined mobility constraints, accurate settlement, and clear allocation of responsibility when vehicles, chargers, or communication links fail.

Japan’s defining integration gap is the coexistence of mature household V2H technology with slow BEV uptake and limited V2G commercialization. Japan’s successful HEV pathway, broad hybrid model availability, and the inclusion of HEVs in the 2035 target allow automakers and consumers to delay a full BEV transition [242]. This path dependence has been reinforced by Toyota’s market dominance and cautious multi-pathway strategy, reflecting its strength in hybrid technology and concerns that a rapid BEV transition could erode engine-related capabilities, disrupt suppliers, and threaten employment in Japan’s automotive industry, which employs 5.5 million workers [249–251]. Extensive urban rail reduces car dependence in major cities, while many apartment residents lack assigned parking or authority to install chargers. In suburban and rural regions, long travel distances, population aging, and concerns about charger availability can continue to favor HEVs or PHEVs. Moreover, V2H and V2G face fundamentally different commercialization conditions. V2H operates as a behind-the-meter appliance whose value derives mainly from resilience and retail-price savings, whereas V2G requires grid approval, accurate metering, aggregation, dispatch compliance, settlement, cybersecurity, and allocation of battery-degradation and mobility risks. This difference explains why technically mature V2H has not automatically produced a scalable V2G market.

Japan’s near-term pathway is therefore likely to be staged: smart V1G charging aligned with midday PV, continued V2H deployment in detached homes, V2B for fleets and public facilities, and only then broader V2G participation. CHAdeMO provides an installed bidirectional base, but coexistence with ISO 15118-20, vendor-specific cloud interfaces, charger certification, and home-energy-management systems (HEMS) still limits seamless aggregation across different vehicles and charging systems. Battery degradation, warranty and resale-value concerns, and high bidirectional-charger costs further weaken the business case. Equity is also important because households best positioned to adopt PV, EVs, and V2H are generally affluent owner-occupiers with off-

street parking.

Overall, Japan follows a residential V2H pathway centered on resilience and PV self-consumption. Automakers, V2H equipment manufacturers, government agencies, utilities, and electricity retailers are the principal actors, while detached homes remain the main deployment unit. Priorities should include shared charging in apartments, sub-meter-based settlement, interoperable APIs, battery-health guarantees, and the use of schools, community centers, and municipal buildings as local resilience hubs. The central challenge for 2030-2040 is to convert mature household V2H technology into an open, scalable, and inclusive distributed-flexibility system.

4.2.7. Netherlands

The Netherlands combines exceptionally high distributed-PV penetration with rapid transport electrification. Solar generation reached 25.5 TWh, or 21.1% of gross electricity production, in 2025, while installed PV capacity increased from about 1 GW in 2014 to approximately 28.8 GW [252]. At roughly 1.6 kW per inhabitant in 2025, Dutch PV capacity was the highest in Europe; approximately 2.8 million residential systems, about one-third of homes, accounted for around 40% of national PV capacity by 2024 [253,254]. By the end of 2025, the passenger-car fleet included about 1.2 million plug-in vehicles: 680,000 battery-electric vehicles and 520,000 plug-in hybrids, equal to 12.9% of the fleet, while plug-ins represented approximately 61% of new registrations [255]. The phase-out of net metering increases the value of locally consuming rooftop generation through managed EV charging, V2H/V2B, or stationary storage [256]. EV batteries can provide intraday and short duration balancing but cannot eliminate the strong seasonal mismatch between summer PV surpluses and winter demand; wider system flexibility therefore remains necessary [119].

SolarEV integration is advancing through two complementary architectures. TU Delft and Power Research Electronics developed a 10-kW integrated offboard direct-current charger that links the PV converter and bidirectional EV charger through a common DC bus and supports PV-to-EV, EV-to-grid, grid-to-EV, and PV-to-grid operation [257]. DC coupling reduces conversion stages and allows the PV array, EV battery, grid inverter, and optional stationary battery to operate as an integrated local energy system (Fig. 6) [257,258]. A second pathway uses bidirectional onboard AC power electronics and compatible public charge points but depends more heavily on interoperable vehicle-charger-backend communication and grid-code compliance [259,260].

Utrecht demonstrates how this technology can be converted into an urban service rather than remaining an isolated pilot. Earlier trials used specially configured Renault Zoe and Hyundai Ioniq 5 vehicles to store locally generated solar electricity and return it to buildings or the grid [259]. In 2025, Renault Group, We Drive Solar, MyWheels, and the City of Utrecht launched a shared fleet of 50 bidirectional Renault 5 E-Tech electric vehicles, with a stated ambition of 500 vehicles and up to approximately 25 MWh of aggregated battery capacity [261]. The shared-fleet model increases vehicle availability and operational predictability while reducing the enrolment, warranty, transaction-cost, and mobility-risk problems associated with privately owned vehicles [259,261]. Its business structure links the municipality, Renault, car-sharing operator MyWheels, energy-management provider We Drive Solar, charging-infrastructure providers, and distribution system operator (DSO) Stedin within one coordinated implementation ecosystem [261,262]. Private-owner trials launched with Vattenfall and We Drive Solar in 2026 are also testing whether charging benefits sufficiently compensate households for providing battery flexibility [261].

Overall, the Netherlands follows an urban shared-mobility and public-charging V2G pathway. Regulation and open communication standards create the foundation, while grid congestion, dynamic prices, municipal experimentation, and multi-actor coordination generate the operational value [260–263]. Urban form further favors collective rather than household-only integration. Dense apartment districts often lack private roofs, assigned parking, and dedicated chargers, whereas low-density suburbs have more rooftop PV and parked vehicles. Public bidirectional charging and shared fleets can therefore connect urban residents without driveways to locally generated renewable electricity and flexibility services [259–261]. Scaling still requires transparent remuneration, guaranteed mobility, simple enrolment, battery-warranty protection, cybersecurity, and equitable access for renters and apartment residents.

V2G is also entering long-term grid planning. TenneT, the Dutch transmission system operator, projects that Dutch PV and wind capacity could reach approximately 46–65 GW and 75–123 GW, respectively, by 2040, requiring roughly 91–148 GW of system flexibility, including 1.5–3.1 GW from V2G [264]. Although the theoretical storage and power capacity of a fully electrified car fleet would be very large, only a fraction of vehicles would be connected, available, and contractually dispatchable at any time [263,264]. Even partial participation could absorb local PV surpluses, reduce peak demand, support congestion management, and defer selected network reinforcement. The central challenge is therefore to move from successful city-scale demonstrations to interoperable and financially durable deployment across public chargers, shared fleets, and private vehicles. Priorities are harmonized certification and grid codes, stable aggregator and consumer-revenue models, battery and mobility guarantees, and inclusive access to bidirectional charging [260,261,263,264].

4.2.8. South Korea

South Korea pursues a state-coordinated decarbonization strategy anchored by its 2050 carbon-neutrality commitment and the 11th Basic Plan for Long-term Electricity Supply and Demand (11th BPLE, 2025). The plan targets 121.9 GW of renewable capacity and a renewable share of 32.9% by 2038, and carbon-free generation, including nuclear power, of 70.7% [265,266]. Yet the 2024 electricity mix remained

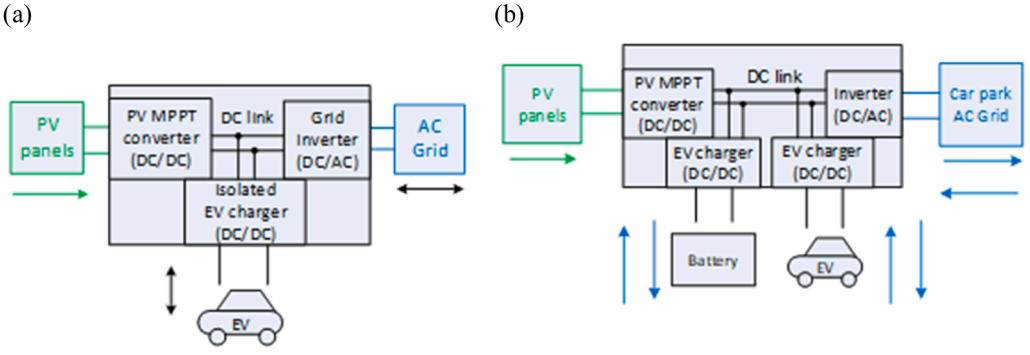

Fig. 6. (a) A 10 kW integrated DC offboard SolarEV charger functioning as both a solar inverter and a V2G charger; (b) an extended architecture incorporating a local stationary battery when an EV is unavailable.

fossil-intensive, with coal supplying 30.5%, gas 28.5%, nuclear 30.2%, and renewables only 9.7% [267]. Cumulative PV reached roughly 32 GW by the end of 2024, but deployment remains predominantly utility-scale. Large generation businesses account for ~86% of installed capacity, whereas residential rooftop PV contributes only ~2.5 GW, or ~8% [268,269]. This creates a spatial mismatch between solar generation concentrated in the southwest and electricity demand concentrated in dense metropolitan areas.

Transport electrification is progressing more rapidly. Cumulative EV registrations exceeded one million in April 2026, while the EV share of new-car sales increased from 9.2% in 2023 to 13.0% in 2025 and 20.1% in the first quarter of 2026 [270]. Charging provision is among the densest internationally, with approximately 405,000 chargers installed by January 2025, equivalent to about 1.7 EVs per charger [271]. Commercial V2L functions offered by Hyundai and Kia vehicles also provide South Korea with an important technical foundation for expanding toward V2H and V2G. Urban structure strongly shapes the country's integration pathway. Approximately 92.1% of the registered population lived in designated urban areas in 2024, and 53.9% of households resided in apartments [272,273]. Consequently, the principal deployment unit is not the detached household but the apartment complex, shared parking facility, urban charging hub, or coordinated district energy system.

Integration is led by vertically integrated domestic conglomerates operating within national and utility programs. Hyundai Motor Group launched South Korea's first V2G pilot on Jeju Island in late 2025 using Kia EV9 and Hyundai IONIQ 9 vehicles to absorb renewable-electricity oversupply. Korea Electric Power Corporation (KEPCO) manages distribution-grid integration, while Jeju Province provides regulatory support, with deployment planned after the pilot [274]. Related demonstrations include Jeju's Carbon-Free Island program, Busan Eco Delta City, and Seoul's Solar City and charging-infrastructure initiatives [275]. These projects illustrate a pathway in which automakers supply V2X-capable vehicles, while KEPCO and local governments coordinate grid access and deployment. The institutional basis for distributed flexibility was strengthened by the Special Act on the Promotion of Distributed Energy, enacted June 2023 and effective from June 2024. The Act introduces grid-impact assessments and requirements for distributed-energy facilities in large developments and supports VPP and demand-response aggregation [276]. However, V2G remains pre-commercial and V2H largely demonstrative. Although CCS-based charging is widely deployed, ISO 15118 communication, bidirectional certification, and cross-operator interoperability remain incomplete [277].

Fragmentation persists primarily because of structural rather than hardware constraints. An apartment building requires collective decisions about charging facilities, electrical upgrades, rooftop use, safety, metering, and cost allocation. Regulations require EV chargers in at least 5% of parking spaces in new apartment complexes and 2% in existing complexes with at least 100 units, but shared underground parking still limits direct household-level V2H [272,273,278]. The apartment complex must therefore operate as the energy-management unit, requiring coordination among residents, building managers, charging operators, automakers, and KEPCO. Distribution grid and market conditions create additional barriers. Jeju already experiences renewable curtailment, demonstrating the value of flexible EV charging but also the limitations of a centralized grid designed for one-way power flows [274]. Regulated retail tariffs and KEPCO's dominant position weaken time-of-use and export price signals needed for V2G revenues, while KEPCO's financial constraints may delay distribution-system modernization. Battery-fire concerns are especially important in underground apartment parking and increase the need for stringent safety, monitoring, liability, and emergency-response standards [279].

Overall, South Korea follows an automaker-led and apartment-oriented V2X pathway. Hyundai-Kia, KEPCO, central and local governments, battery manufacturers, and charging-technology providers are leading actors. Its near-term sequence is likely to progress from commercial V2L to apartment-level managed charging and V2H, followed by utility-coordinated V2G and VPP aggregation. The most credible applications are shared apartment V2X hubs, community chargers, building-integrated PV, district-level VPPs, and island energy systems. The June 2025 Zero-Energy Building requirement for new apartments may provide an additional basis for combining building energy management, PV, and EV charging [280]. The central challenge is to convert South Korea's strong automotive and battery industries into interoperable, financially viable, and safely operated apartment-scale flexibility systems.

4.2.9. United States

The United States energy transition is shaped by fragmented governance across federal policies, diverse state-level mandates, and significant market forces. Rooftop PV capacity grew from 7.3 GW in 2014 to 44 GW in June 2023, constituting roughly one-third of total national solar capacity [281]. This growth was substantially driven by federal incentives, state-level programs, net metering, and household cost savings [282–284]. EVs accounted for 7.8% of new sales in 2025, although their share of the total vehicle fleet remained only about 1.7% [285]. Adoption continues to face cost, charging-time, and infrastructure barriers [286], while approximately 170,000 public charging ports were available in 2023 [287]. Electricity generation remains heavily reliant on fossil fuels. Approximately 60% of utility-scale electricity generation comes from coal, natural gas, and petroleum, while 19% comes from nuclear and 21% from renewable sources, including 3.9% from solar PV [288]. Consequently, the emissions benefits of EV charging vary regionally, although the increasing penetration of solar and other renewables strengthens the value of managed charging and bidirectional operation.

The dominant national pathway combines manufacturer-specific residential backup with fleet-oriented V2G. Automakers such as Ford and Kia market bidirectional-capable vehicles primarily as household backup-power systems. These behind-the-meter applications are easier to commercialize because they can operate through private vehicles, chargers, transfer equipment, and home energy systems. By contrast, grid-exporting V2G requires utility interconnection, metering, aggregation, dispatch, compensation, and market participation. It therefore remains concentrated in pilots, including residential trials using Ford F-150 Lightning vehicles and school-bus V2G programs [289,290]. California provides the clearest example of how state policy can partially overcome national fragmentation. Its pathway has combined technology deployment, entrepreneurial firms, fuel and vehicle regulation, rooftop-solar policy, and long-term market targets. Early experimentation ranged from General Motors' EV1 program to the California Cars Initiative's plug-in Prius conversions. The Low-Carbon Fuel Standard subsequently established a technology-neutral framework for reducing the life-cycle carbon intensity of transport fuels, allowing electricity to compete with petroleum and biofuels [291,292]. The 2006 Million Solar Roofs initiative expanded distributed PV and improved the attractiveness of home EV charging, while the state's early million-EV target connected transport electrification with wider clean-energy policy [293,294].

By 2025, California had surpassed 2.5 million cumulative Zero Emission Vehicle (ZEV) sales, more than three times its total at the end of 2019 [295]. A state assessment reported more than 216,000 chargers by May 2026, exceeding the number of gasoline-station nozzles, and that approximately one-fifth of new-vehicle sales were fossil-fuel-free. Executive Order N-79-20 further established a goal that all new passenger vehicles sold from 2035 be zero-emission. Together, these measures illustrate how a state-level policy sequence can create a reinforcing solar-EV innovation ecosystem. However, California's success in scaling PV and EV adoption has not yet produced universal SolarEV integration. Its policies primarily accelerated the two technologies in parallel; interoperable V2H/V2G services, equitable charging access, distribution

network coordination, and durable compensation for exported electricity remain incomplete. California therefore represents both the strongest state-level innovation pathway and the limitations of relying on individual states to compensate for the absence of a coherent national system.

The principal national barrier is fragmentation across more than 3,000 utilities, state regulators, electricity markets, building codes, permitting authorities, automakers, and charging providers. Interconnection and export rules vary by jurisdiction, while implementation of ISO 15118 and SAE J3072 remains uneven. Manufacturer-specific vehicles, chargers, and home-integration equipment also limit cross-brand interoperability. In some regions, concentrated charging may exceed local feeder or transformer capacity unless charging is managed or networks are reinforced [296]. Urban form and equity further divide the market. Detached-home owners with garages are best positioned to install rooftop PV, home chargers, and proprietary backup systems, whereas renters and apartment residents depend on public, workplace, curbside, or shared charging. Differences in state incentives, permitting, inspections, utility procedures, and public-charging provision therefore reinforce geographic and income disparities.

Overall, the United States follows a manufacturer-specific residential-backup pathway alongside fleet V2G. Detached homes, electric pickup trucks, school buses, and commercial fleets are the principal deployment units, while automakers, utilities, state regulators, fleet operators, and charging-system providers are the leading actors. The near-term pathway is likely to progress through private V2H systems and controllable fleet depots before broader multi-manufacturer V2G becomes viable. The central challenge is to translate innovation in leading states such as California into interoperable national rules, broad charging access, utility-scale aggregation, and reliable compensation for distributed flexibility.

Across the nine countries, high rooftop-PV or EV penetration alone does not ensure their integration. Progress depends on aligning an appropriate deployment unit—household, district, fleet, or shared-mobility system—with interoperable technology, viable compensation, coordinated governance, and inclusive access. These patterns provide the basis for the five transition archetypes presented in Section 4.3.

4.3. Emerging transition-pathway archetypes and implications

The comparison of nine countries shows that SolarEV City development is not converging toward a single model. Instead, distinct transition-pathway archetypes emerge, shaped by national energy systems, urban form, industrial capacity, charging standards, electricity-market design, and policy priorities (Table 5). The five archetypes group countries with similar combinations of four classification characteristics: dominant coordination mechanism, principal deployment unit, current integration maturity, and main transition bottleneck. They are heuristic and non-exclusive rather than fixed country labels, and individual countries may exhibit secondary characteristics of other archetypes. Because the sample is purposive rather than statistically representative, these archetypes should be treated as transferable analytical lenses rather than an exhaustive global taxonomy. Their application beyond the nine cases requires validation and adaptation to local climatic, urban, market, and institutional conditions. The archetypes identify what each system has already developed, what remains misaligned, and where the next stage of policy and market design should focus.

1. **The Resilience-Driven V2H Pioneer (Japan)**: This pathway prioritizes disaster preparedness and energy security at the household level. These priorities stimulated early, coordinated government-industry action to standardize and commercialize V2H technology [297], resulting in the world's most mature V2H market. However, this success in household resilience has not translated proportionally into systemic grid integration (V2G), which lags due to regulatory, market-access, and compensation barriers [15]. The next step is to expand from household backup power toward aggregated grid services while preserving the resilience value that enabled early adoption.
2. **Market-Led, Decentralized Integration Pathway (U.S., Australia)**: This pathway combines dynamic, bottom-up innovation, often from automakers and tech startups, with strong consumer-led demand, including high rooftop-PV uptake in Australia [170]. However, progress toward systemic integration is uneven because of fragmentation in the policy and regulatory landscape, a lack of national coordination, a complex multi-utility environment (especially in the U.S.), and delays in the adoption of key technical standards [183]. The next step is to convert private innovation and household-level investment into interoperable aggregation, stable compensation, and feeder-aware coordination.
3. **Strategically Coordinated Industrial Pathway (China, South Korea)**: In this model, V2G integration is explicitly incorporated into national industrial and energy strategies, driven by strong central government direction [148] or championed by major domestic corporations aligned with national goals [266]. Development often proceeds through large-scale, state-sanctioned pilot projects, such as Busan Eco Delta City, but may be slowed by standard-setting processes, including GB/T development in China, and incomplete market design. The next step is to translate strategic pilots and industrial capability into replicable business models, open interfaces, and routine distribution-grid operation.
4. **Regulation-Enabled Early Integrator (France, Netherlands)**: This archetype is defined by proactive, coherent, and often national-level regulatory frameworks that create a stable and predictable environment for investment. Smart-meter rollouts, streamlined distribution system operator (DSO) structures, and "living lab" experimentation, as seen in Dutch V2G demonstrations [257], support a smoother transition from pilot projects to early commercial V2G service deployment. The next step is to scale early commercial

Table 5
SolarEV City development archetypes. Maturity classifications distinguish technical availability and interoperability from operational integration through aggregation, dispatch, settlement, compensation, and market participation. "Commercial" therefore does not imply nationwide availability, cross-manufacturer compatibility, routine market participation, or durable net profitability.

Archetype	Countries	Primary strength	Current maturity	Main transition task
Resilience-Driven V2H Pioneer	Japan	Commercial household V2H and disaster-resilience value	Commercial V2H; limited V2G	Expand from household backup to aggregated grid services
Market-Led, Decentralized Integration Pathway	U.S., Australia	Private innovation, consumer demand, and high DER potential	Pilots and early commercial applications	Create interoperability, stable compensation, and feeder-aware aggregation
Strategically Coordinated Industrial Pathway	China, South Korea	Industrial strategy and large-scale demonstration capacity	Strategic pilots	Convert pilots into open, replicable market and grid-operation models
Regulation-Enabled Early Integrator	France, Netherlands	Coherent regulation, smart metering, and early market integration	Early commercial V2G	Scale interoperable services while preserving affordability and grid compatibility
Foundational Growth and Integration-by-Design Pathway	India, Indonesia	High future demand growth and opportunity to design integration early	Nascent	Build PV, EV, grid-data, and managed-charging foundations before large-scale V2G

models while maintaining interoperability, affordability, and distribution-grid compatibility.

5. **Foundational Growth and Integration-by-Design Pathway (India, Indonesia)**: These countries have substantial future potential but significant foundational barriers across the socio-techno-economic system. In these countries, the primary policy focus remains on individually accelerating the basic adoption of rooftop PV and EVs. Systemic integration through V2G is acknowledged as a long-term objective but is contingent on major grid modernization and policy development. Their advantage is that SolarEV integration can be designed into the expansion of PV, EVs, charging infrastructure, and distribution planning from an early stage. The near-term priority is therefore managed charging, affordable rooftop PV and EV deployment, distribution-grid data, and city-scale pilot projects before widespread bidirectional operation.

These archetypes confirm that no one-size-fits-all pathway exists; strategies must reflect local institutional and technical contexts rather than import models wholesale from other regions. At the same time, the archetypes reveal a common direction: all countries must eventually connect rooftop PV, EV charging, distribution-grid operation, market compensation, and social inclusion into a coherent urban energy system.

5. Discussion

5.1. Implications for socio-techno-economic transitions toward SolarEV Cities

The findings show that SolarEV City development is a system-reconfiguration process rather than a matter of deploying additional PV systems, EVs, and bidirectional chargers. The multi-level perspective explains such transitions through interactions among niche innovations, incumbent regimes, and wider landscape pressures [53]. Rooftop PV and EVs have expanded rapidly as separate niches without fundamentally changing the institutional separation among electricity, mobility, buildings, and urban planning. The persistent PV-EV integration gap therefore reflects weak coordination across the six dimensions examined in this review, climate, urban structure, technology, economics, policy, and society, rather than the immaturity of any single component. Across the country cases, technical capability frequently advances faster than operational integration, leaving compatible assets unable to participate routinely in grid and market operations. Such a transition requires these technologies to become embedded in mutually supportive infrastructures, markets, regulations, and user practices [55].

Climate and urban structure establish the physical and spatial conditions within which this transition occurs. Climate shapes PV generation, heating and cooling demand, and seasonal demand-supply matching, meaning that the same technical configuration can produce substantially different outcomes across locations (Figs. 3 and 4). Urban structure determines rooftop availability, demand density, vehicle ownership, parking access, building use, and the spatial distribution of electricity surpluses and deficits [56]. Dense urban centers may consequently depend on surrounding suburban or regional resources rather than achieving self-sufficiency within their administrative boundaries. In the Paris region, expanding the system boundary from the urban core to the surrounding metropolitan area substantially improves modeled self-sufficiency [36]. SolarEV City planning should therefore identify the appropriate operational scale, building, neighborhood, feeder, municipality, or metropolitan region, according to local climatic and urban conditions.

Technology, economics, policy, and society determine whether this physical potential can be converted into a functioning and legitimate urban-energy system. Technologically, the central challenge is interoperability across vehicles, chargers, communication platforms, inverters, and distribution networks rather than the absence of individual components [298]. Economically, distributed flexibility must be translated into reliable value through aggregation, market access, metering, settlement, compensation, and transparent benefit allocation. Peer-to-peer trading provides one possible mechanism for increasing the value of distributed energy resources [129]. Policy must overcome the institutional separation among electricity, transport, buildings, and land-use governance that currently constrains integrated implementation [299]. Social acceptance depends on protecting mobility, battery health, privacy, and user control [94]. Equitable participation also requires alternatives to ownership-centered models that primarily benefit households with capital, private rooftops, and off-street parking [160].

The national pathways show that SolarEV City transitions can emerge from different institutional strengths. Japan has advanced through resilience-oriented household V2H [297], while Australia can build on widespread consumer-owned rooftop PV [170]. France demonstrates a commercially bundled V2G pathway [213], whereas Utrecht shows how municipal coordination and shared mobility can establish V2G as an urban service [262]. China illustrates a centrally coordinated pathway based on national vehicle–grid interaction pilots [197]. South Korea follows a more automaker-led industrial pathway [274]. India has opportunities to incorporate managed charging into expanding mobility and electricity systems [226], while Indonesia must progress from modeling evidence toward integrated field implementation [240]. Despite these different starting points, all pathways require alignment across the six dimensions.

Together, these findings provide an integrated response to the questions posed in the Introduction. Climate and urban form establish the physical potential and appropriate spatial scale for rooftop PV–EV integration, while interoperability, distribution-network coordination, viable value sharing, integrated governance, and inclusive access determine whether this potential becomes operational. The principal integration gaps therefore occur not within individual technologies but at the interfaces among vehicles, chargers, networks, markets, institutions, and users. Beyond reducing emissions, their coordination can strengthen urban resilience, expand participation in energy systems, and distribute benefits more widely, provided that renters, apartment residents, shared fleets, and underserved communities are included.

The comparative pathways further show that scaling is constrained by path dependence in charging standards, electricity-market design, utility regulation, housing form, industrial organization, and established institutional roles. Although the five transition archetypes begin from different strengths, they converge on a common need for interoperable aggregation, durable compensation, distribution-network coordination, and social legitimacy. Research and policy should therefore prioritize local behavioral and network data, multi-year evidence of actor-level value, battery and consumer protections, high-density demonstrations, interoperable certification, and integrated energy–transport–urban governance.

5.2. Vision-led transition management and staged implementation

The transition from isolated demonstrations to scalable SolarEV Cities requires a shared long-term vision and staged implementation. Transition management emphasizes vision formation, experimentation, evaluation, and iterative adjustment rather than following a predetermined technological pathway [300]. Implementation should begin with a local diagnosis of climate, urban form, rooftop availability, electricity demand, vehicle use, parking access, and distribution-grid conditions. The expected benefits, costs, and risks should then be assessed separately for households, EV owners, utilities, municipalities, aggregators, and other participating actors. Because a project can create positive system-wide value while remaining unattractive to the actor expected to invest or provide flexibility, this assessment should be followed by explicit benefit-sharing and cost-allocation arrangements. These may include dynamic tariffs, smart-charging payments, resilience contracts, flexibility-market revenues, and bundled housing-mobility-energy services, while protecting mobility needs,

battery warranties, privacy, and equitable access.

Because transition responsibilities and capabilities are distributed among multiple actors, the next stage should establish a multi-stakeholder implementation platform involving municipalities, utilities, automakers, charging providers, aggregators, building owners, researchers, and communities [301]. This platform should conduct integrated demonstrations that test not only PV, EV, and charging equipment, but also grid operation, market rules, data governance, user participation, compensation, and institutional responsibility. Strategic niche management indicates that protected experiments contribute to transitions only when they create shared expectations, transferable learning, and durable actor networks [302]. Demonstrations should therefore compare unmanaged charging, V1G, V2H/V2B, and V2G under the same local conditions and evaluate technical performance, economic viability, battery effects, reliability, user acceptance, and distributional outcomes. Successful arrangements should subsequently be converted into interoperable standards, contractual templates, planning methods, evaluation protocols, and replicable business models. This staged process allows local experiments to develop into self-sustaining and regionally scalable SolarEV City systems rather than remaining subsidy-dependent pilot projects.

5.3. International coordination, interoperability, and transferable learning

Because vehicle platforms, charging equipment, communication systems, and supply chains operate across national borders, scaling SolarEV Cities requires international coordination. The immediate objective should be functional interoperability rather than the adoption of a single physical connector worldwide. CHAdeMO provides established operational experience in commercial DC bidirectional charging and household V2H [96]. ISO 15118-20 provides an expanding communication framework for bidirectional power transfer, secure authentication, and advanced energy-management functions [97]. China's GB/T–ChaoJi ecosystem represents another major pathway for high-power and bidirectional charging [98]. NACS/SAE J3400 is similarly emerging as an important physical interface in North America [99]. These ecosystems should align around common operational requirements for authorization, state-of-charge exchange, power limits, metering, grid-support functions, cybersecurity, and settlement. Secure device authentication and clearly allocated operational responsibilities are particularly important when vehicles from different manufacturers are aggregated at scale [100]. International coordination should also establish minimum principles for data minimization, informed consent, and user control over mobility and household information [101].

International cooperation should improve the comparability and transferability of evidence from demonstration projects. Common reporting protocols should document actual vehicle availability, delivered energy and power, battery impacts, customer retention, grid services, public expenditure, and the distribution of costs and benefits. The country cases provide complementary lessons on resilience-led adoption, commercial service integration, municipal coordination, industrial-scale experimentation, and integration-by-design, but these lessons must be adapted to local institutional and urban conditions. Transferable learning does not mean copying a successful national model unchanged. Climate, urban form, housing tenure, mobility patterns, electricity prices, grid governance, and institutional capacity determine which transition sequence is feasible in each city. International platforms should therefore transfer design principles, evaluation methods, open modeling tools, and implementation experience while allowing local actors to adapt system configurations and business models. By reducing technological fragmentation, standardizing evidence, and transferring adaptable design principles, international coordination can accelerate SolarEV City development.

6. Conclusion

The SolarEV City Concept offers a technically feasible and potentially transformative pathway for deep urban decarbonization by integrating rooftop PV with EV fleets as distributed mobile storage. However, the rapid but largely parallel growth of PV and EV markets has not yet produced systemic integration. This review shows that the principal barriers lie at the interfaces among technologies, distribution grids, markets, institutions, urban structures, and users, rather than in the availability of the individual technologies. The comparison of nine countries shows that transition pathways are strongly context-dependent, ranging from Japan's resilience-driven V2H pathway to regulation-enabled commercial V2G pathways in France and the Netherlands. Nevertheless, all pathways face a common challenge: aligning climate- and place-specific system design with interoperable technologies, viable value-sharing mechanisms, integrated governance, and inclusive participation. Increasing PV and EV deployment alone will therefore not create SolarEV Cities. Realizing SolarEV Cities requires shared urban-energy visions, feeder-aware planning, coordinated demonstrations, supportive market and regulatory frameworks, and implementation platforms linking governments, utilities, automakers, aggregators, municipalities, building owners, and communities. Treating PV-EV integration as a socio-techno-economic transition rather than as a collection of separate technologies can translate rapid technological progress into scalable, resilient, equitable, and deeply decarbonized urban-energy systems.

Declaration of generative AI and AI-assisted technologies in the writing process

During the preparation of this work, the authors used ChatGPT to improve language, readability, and clarity. After using this tool, the authors reviewed and edited the content as needed and take full responsibility for the content of the published article.

CRediT authorship contribution statement

T. Kobashi: Writing – review & editing, Writing – original draft, Visualization, Validation, Supervision, Software, Resources, Project administration, Methodology, Investigation, Funding acquisition, Formal analysis, Data curation, Conceptualization. **G. R. Chandra Mouli:** Writing – review & editing, Writing – original draft, Visualization, Validation. **J. Liu:** Writing – review & editing, Writing – original draft, Visualization, Validation. **S. Chang:** Writing – review & editing, Writing – original draft. **C.D. Harper:** Writing – review & editing, Writing – original draft. **R. Zhou:** Writing – review & editing, Writing – original draft, Validation. **R.G. Dewi:** Writing – review & editing, Writing – original draft, Validation. **U.W.R. Siagian:** Writing – review & editing, Writing – original draft, Validation. **J. Kang:** Writing – review & editing, Writing – original draft, Validation. **P.P. Patankar:** Writing – review & editing, Writing – original draft, Validation. **Z.H. Rather:** Writing – review & editing, Writing – original draft, Visualization. **K. Say:** Writing – review & editing, Writing – original draft, Validation. **T. Zhang:** Writing – review & editing, Writing – original draft, Visualization. **Y. Liu:** Writing – review & editing, Writing – original draft, Visualization. **K. Tanaka:** Writing – review & editing, Writing – original draft, Validation. **P. Ciais:** Writing – review & editing, Validation. **D.M. Kammen:** Writing – review & editing, Writing – original draft, Validation.

Declaration of competing interest

The authors declare that they have no known competing financial interests or personal relationships that could have appeared to influence the work reported in this paper.

Acknowledgements

This work was supported by JSPS KAKENHI Grant Number JP23K11520 and by the commissioned research fund provided by F-REI (JPFR26030301).

Supplementary materials

Supplementary material associated with this article can be found, in the online version, at doi:10.1016/j.adapen.2026.100314.

Data availability

Data will be made available on request.

References

[1] IPCC. Climate change 2021: the physical science basis. In: Contribution of Working Group I to the Sixth Assessment Report of the Intergovernmental Panel on Climate Change; 2021.
[2] IPCC WG III. WG III contribution to the sixth assessment report. Chapter 9: Buildings. 2022.
[3] Kammen DM, Sunter DA. City-integrated renewable energy for urban sustainability. Science 2016;352:922–8.
[4] SolarPower Europe. Global market outlook for solar power 2025-2029. 2025.
[5] IEA. Global EV Outlook 2025 expanding sales in diverse markets. 2025.
[6] IEA. World Energy Outlook 2025. 2025.
[7] IEA PVPS. Snapshot of global PV markets 2026 (IEA-PVPS T1-49:2026). 2026.
[8] Rana MM, Uddin M, Sarkar MR, Shafiullah GM, Mo H, Atef M. A review on hybrid photovoltaic – battery energy storage system: current status, challenges, and future directions. J Energy Storage 2022;51. https://doi.org/10.1016/j.est.2022.104597.
[9] Yao H, Zhou Q. Research status and application of rooftop photovoltaic generation systems. Clean Energy Syst 2023;5. https://doi.org/10.1016/j.cles.2023.100065.
[10] Zhang Z, Chen M, Zhong T, Zhu R, Qian Z, Zhang F, et al. Carbon mitigation potential afforded by rooftop photovoltaic in China. Nat Commun 2023;14:2347. https://doi.org/10.1038/s41467-023-38079-3.
[11] Joshi S, Mittal S, Holloway P, Shukla PR, Ó Gallachóir B, Glynn J. High resolution global spatiotemporal assessment of rooftop solar photovoltaics potential for renewable electricity generation. Nat Commun 2021;12. https://doi.org/10.1038/s41467-021-25720-2.
[12] Kim JY, Koide D, Ishihama F, Kadoya T, Nishihiro J. Current site planning of medium to large solar power systems accelerates the loss of the remaining semi-natural and agricultural habitats. Sci Total Environ 2021;779. https://doi.org/10.1016/j.scitotenv.2021.146475.
[13] Hao K, Ialnazov D, Yamashiki Y. GIS analysis of solar PV locations and disaster risk areas in Japan. Front Sustain 2021;2. https://doi.org/10.3389/frsus.2021.815986.
[14] Kobashi T, Yoshida T, Yamagata Y, Naito K, Pfenninger S, Say K, et al. On the potential of "Photovoltaics + Electric vehicles" for deep decarbonization of Kyoto's power systems: techno-economic-social considerations. Appl Energy 2020;275. https://doi.org/10.1016/j.apenergy.2020.115419.
[15] Trang NTQ, Okada K, Sugiyama Y, Yoshida T, Hirano Y, Jittrapirom P, et al. On the decarbonization potentials of rooftop PVs integrated with EVs as battery for all the municipalities of Japan. Appl Energy 2025;393. https://doi.org/10.1016/j.apenergy.2025.126067.
[16] Zhang Z, Qian Z, Chen M, Zhu R, Zhang F, Zhong T, et al. Worldwide rooftop photovoltaic electricity generation may mitigate global warming. Nat Clim Chang 2025. https://doi.org/10.1038/s41558-025-02276-3.
[17] Bistline JET, Watten A. Emissions reductions of rooftop solar are overstated by approaches that inadequately capture substitution effects. Nat Clim Chang 2025;15:1173–5. https://doi.org/10.1038/s41558-025-02459-y.
[18] Clean Technica. Global EV sales leaders — 2025 top markets & powertrains 2026. https://cleantechnica.com/2026/02/03/global-ev-sales-leaders-2025-top-markets-powertrains/(accessed May 5, 2026).
[19] Reuters. Global EV sales fall again in February 2026. https://www.reuters.com/sustainability/climate-energy/global-ev-sales-fall-again-february-2026-03-13/(accessed May 1, 2026).
[20] BNEF. Electric vehicle Outlook 2024. 2024.
[21] Chen L, Ma R. Clean energy synergy with electric vehicles: insights into carbon footprint. Energy Strat Rev 2024;53. https://doi.org/10.1016/j.esr.2024.101394.
[22] Pearre NS, Ribberink H. Review of research on V2X technologies, strategies, and operations. Renew Sustain Energy Rev 2019;105:61–70. https://doi.org/10.1016/j.rser.2019.01.047.
[23] Shang Y, Li S. FedPT-V2G: Security enhanced federated transformer learning for real-time V2G dispatch with non-IID data. Appl Energy 2024;358. https://doi.org/10.1016/j.apenergy.2024.122626.
[24] Lund H, Kempton W. Integration of renewable energy into the transport and electricity sectors through V2G. Energy Policy 2008;36:3578–87. https://doi.org/10.1016/j.enpol.2008.06.007.
[25] Signer T, Baumgartner N, Ruppert M, Sandmeier T, Fichtner W. Modeling V2G spot market trading: the impact of charging tariffs on economic viability. Energy Policy 2024;189. https://doi.org/10.1016/j.enpol.2024.114109.
[26] Letcher M, Britton J. The role of electric vehicle-to-X in net zero energy systems: a comprehensive review. Energy Res Soc Sci 2025;122. https://doi.org/10.1016/j.erss.2025.104021.
[27] Byrne J, Taminiau J, Kurdgelashvili L, Kim KN. A review of the solar city concept and methods to assess rooftop solar electric potential, with an illustrative application to the city of Seoul. Renew Sustain Energy Rev 2015;41:830–44. https://doi.org/10.1016/j.rser.2014.08.023.
[28] Byrne J, Taminiau J, Seo J, Lee J, Shin S. Are solar cities feasible? A review of current research. Int J Urban Sci 2017;21:239–56. https://doi.org/10.1080/12265934.2017.1331750.
[29] Taminiau J, Byrne J, Kim J, Kim MW, Seo J. Infrastructure-scale sustainable energy planning in the cityscape: transforming urban energy metabolism in East Asia. Wiley Interdiscip Rev Energy Environ 2021;10:e397. https://doi.org/10.1002/wene.397.
[30] O'Shaughnessy E, Chavez Duckworth A, Houck S, Barbose G. Solar cities: a case study analysis of city-level enablers of expanded solar energy access. Energy Res Soc Sci 2025;127:104321. https://doi.org/10.1016/j.erss.2025.104321.
[31] Kobashi T, Jittrapirom P, Yoshida T, Hirano Y, Yamagata Y. SolarEV City concept: building the next urban power and mobility systems. Environ Res Lett 2021;16. https://doi.org/10.1088/1748-9326/abd430.
[32] Dewi RG, Siagian UWR, Asmara B, Anggraini SD, Ichihara J, Kobashi T. Equitable, affordable, and deep decarbonization pathways for low-latitude developing cities by rooftop photovoltaics integrated with electric vehicles. Appl Energy 2023;332. https://doi.org/10.1016/j.apenergy.2022.120507.
[33] Jittayasotorn T, Sadidah M, Yoshida T, Kobashi T. On the adoption of rooftop photovoltaics integrated with electric vehicles toward sustainable Bangkok City, Thailand. Energies 2023;16. https://doi.org/10.3390/en16073011.
[34] Liu J, Li M, Xue L, Kobashi T. A framework to evaluate the energy-environment-economic impacts of developing rooftop photovoltaics integrated with electric vehicles at city level. Renew Energy 2022;200:647–57. https://doi.org/10.1016/j.renene.2022.10.011.
[35] Chang S, Cho J, Heo J, Kang J, Kobashi T. Energy infrastructure transitions with PV and EV combined systems using techno-economic analyses for decarbonization in cities. Appl Energy 2022;319. https://doi.org/10.1016/j.apenergy.2022.119254.
[36] Deroubaix P, Kobashi T, Gurriaran L, Benkhelifa F, Ciais P, Tanaka K. SolarEV City concept for Paris. Appl Energy 2023;350. https://doi.org/10.1016/j.apenergy.2023.121762.
[37] Sovacool BK, Axsen J, Kempton W. The future promise of Vehicle-to-Grid (V2G) integration: a sociotechnical review and research agenda. Annu Rev Environ Resour 2017;42:377–406. https://doi.org/10.1146/annurev-environ-030117-020220.
[38] Pamidimukkala A, Kermanshachi S, Rosenberger JM, Hladik G. Barriers and motivators to the adoption of electric vehicles: a global review. Green Energy Intell Transp 2024;3. https://doi.org/10.1016/j.geits.2024.100153.
[39] Long Y, Xu X, Huo Z. Urban rooftop photovoltaic potential model: a study on assessment methods and model framework. Energy Build 2025;345. https://doi.org/10.1016/j.enbuild.2025.116138.
[40] IRENA. Renewable power generation costs in 2024. 2025.
[41] Boström T, Babar B, Hansen JB, Good C. The pure PV-EV energy system – a conceptual study of a nationwide energy system based solely on photovoltaics and electric vehicles. Smart Energy 2021;1. https://doi.org/10.1016/j.segy.2021.100001.
[42] Hsieh IYL, Chossière GP, Gençer E, Chen H, Barrett S, Green WH. An integrated assessment of emissions, air quality, and public health impacts of China's transition to electric vehicles. Environ Sci Technol 2022;56:6836–46. https://doi.org/10.1021/acs.est.1c06148.
[43] Hua X, Thomas A, Shultis K. Recent progress in battery electric vehicle noise, vibration, and harshness. Sci Prog 2021;104. https://doi.org/10.1177/00368504211005224.
[44] Kobashi T, Choi Y, Hirano Y, Yamagata Y, Say K. Rapid rise of decarbonization potentials of photovoltaics plus electric vehicles in residential houses over commercial districts. Appl Energy 2022;306. https://doi.org/10.1016/j.apenergy.2021.118142.
[45] Rutovitz J, Langdon R, Briggs C, Mey F, Dominish E, Nagrath K. Updated employment factors and occupational shares for the energy transition. Renew Sustain Energy Rev 2025;212. https://doi.org/10.1016/j.rser.2025.115339.
[46] Sepehrzad R, Yadav M, Lazaroiu GC, Avramidis II, Benitez IB, Di Somma M, et al. A critical overview of local energy communities: State-of-the-art, real-life applications & challenges and tackling the academia-industry gap. Renew Sustain Energy Rev 2026;226. https://doi.org/10.1016/j.rser.2025.116165.
[47] Luderer G, Madeddu S, Merfort L, Ueckerdt F, Pehl M, Pietzcker R, et al. Impact of declining renewable energy costs on electrification in low-emission scenarios. Nat Energy 2022;7:32–42. https://doi.org/10.1038/s41560-021-00937-z.
[48] Grant MJ, Booth A. A typology of reviews: an analysis of 14 review types and associated methodologies. Health Info Libr J 2009;26:91–108. https://doi.org/10.1111/j.1471-1842.2009.00848.x.
[49] Torraco RJ. Writing integrative literature reviews: using the past and present to explore the future. Hum Resour Dev Rev 2016;15:404–28. https://doi.org/10.1177/1534484316671606.
[50] Quitzow L. Smart grids, smart households, smart neighborhoods–contested narratives of prosumage and decentralization in Berlin's urban Energiewende.

Innov: Eur J Soc Sci Res 2023;36:107–22. https://doi.org/10.1080/13511610.2022.2057934.
[51] Vishnu G, Kaliyaperumal D, Jayaprakash R, Karthick A, Kumar Chinnaiyan V, Ghosh A. Review of challenges and opportunities in the integration of electric vehicles to the grid. World Electr Veh J 2023;14. https://doi.org/10.3390/wevj14090259.
[52] Byrne J, Taminiau J. Utilizing the urban fabric as the solar power plant of the future. Urban Energy Transit: Renew Strat Cities Reg Elsevier 2018:31–49. https://doi.org/10.1016/B978-0-08-102074-6.00016-4.
[53] F.W. Geels Technological transitions as evolutionary reconfiguration processes: a multi-level perspective and a case-study Research Policy, 31, 2002, 1257–1274, doi:10.1016/S0048-7333(02)00062-8.
[54] Geels FW, Sovacool BK, Schwanen T, Sorrell S. Sociotechnical transitions for deep decarbonization. Science 2017;357:1242–4.
[55] Geels FW, Sovacool BK, Schwanen T, Sorrell S. The socio-technical dynamics of low-carbon transitions. Joule 2017;1:463–79. https://doi.org/10.1016/j.joule.2017.09.018.
[56] Kobashi T, Xiao J, Zhang T. Enabling maximum decarbonization from districts in Kyoto through rooftop PVs by integrating with EVs as battery. Sustain Cities Soc 2025;131. https://doi.org/10.1016/j.scs.2025.106717.
[57] Liu J, Zhang M, Hu M, Wu J, Ji Y. Interactive multi-factor analysis for enhancing the economic viability of integrated rooftop PV and EV systems: a Shenzhen case study. J Build Eng 2026;118. https://doi.org/10.1016/j.jobe.2025.114976.
[58] Arowolo W, Perez Y. Rapid decarbonisation of Paris, Lyon and Marseille's power, transport and building sectors by coupling rooftop solar PV and electric vehicles. Energy Sustain Dev 2023;74:196–214. https://doi.org/10.1016/j.esd.2023.04.002.
[59] Fachrizal R, Qian K, Lindberg O, Shepero M, Adam R, Widén J, et al. Urban-scale energy matching optimization with smart EV charging and V2G in a net-zero energy city powered by wind and solar energy. ETransportation 2024;20. https://doi.org/10.1016/j.etran.2024.100314.
[60] Blair N, Diorio N, Freeman J, Gilman P, Janzou S, Neises T, et al. System Advisor Model (SAM) general description (version 2017.9.5). 2018.
[61] NASA Power. POWERing the future of energy, infrastructure, and agroclimatology 2026. https://power.larc.nasa.gov/(accessed June 9, 2026).
[62] Farhangi H. The path of the smart grid. IEEE Power Energy Mag 2010;8:18–28. https://doi.org/10.1109/MPE.2009.934876.
[63] Biyik E, Araz M, Hepbasli A, Shahrestani M, Yao R, Shao L, et al. A key review of building integrated photovoltaic (BIPV) systems. Eng Sci Technol Int J 2017;20:833–58. https://doi.org/10.1016/j.jestch.2017.01.009.
[64] Palensky P, Dietrich D. Demand side management: Demand response, intelligent energy systems, and smart loads. IEEE Trans Ind Inf 2011;7:381–8. https://doi.org/10.1109/TII.2011.2158841.
[65] Hernandez RR, Hoffacker MK, Field CB. Efficient use of land to meet sustainable energy needs. Nat Clim Chang 2015;5:353–8. https://doi.org/10.1038/nclimate2556.
[66] Green M, Dunlop E, Hohl-Ebinger J, Yoshita M, Kopidakis N, Hao X. Solar cell efficiency tables (version 57). Prog Photovolt: Res Appl 2021;29:3–15. https://doi.org/10.1002/pip.3371.
[67] Kanters J, Wall M. A planning process map for solar buildings in urban environments. Renew Sustain Energy Rev 2016;57:173–85. https://doi.org/10.1016/j.rser.2015.12.073.
[68] Funkhouser E, Blackburn G, Magee C, Rai V. Business model innovations for deploying distributed generation: the emerging landscape of community solar in the U.S. Energy Res Soc Sci 2015;10:90–101. https://doi.org/10.1016/j.erss.2015.07.004.
[69] Strantzali E, Aravossis K. Decision making in renewable energy investments: a review. Renew Sustain Energy Rev 2016;55:885–98. https://doi.org/10.1016/j.rser.2015.11.021.
[70] Amado M, Poggi F. Towards solar urban planning: a new step for better energy performance. Energy Procedia, 30. Elsevier Ltd; 2012. p. 1261–73. https://doi.org/10.1016/j.egypro.2012.11.139.
[71] Fretzen U, Ansarin M, Brandt T. Temporal city-scale matching of solar photovoltaic generation and electric vehicle charging. Appl Energy 2021;282. https://doi.org/10.1016/j.apenergy.2020.116160.
[72] Kostopoulos E, Spyropoulos G, Christopoulos K, Kaldellis JK. Solar energy contribution to an electric vehicle needs on the basis of long-term measurements. Procedia Structural Integrity, 10. Elsevier B.V.; 2018. p. 203–10. https://doi.org/10.1016/j.prostr.2018.09.029.
[73] Neumann HM, Schär D, Baumgartner F. The potential of photovoltaic carports to cover the energy demand of road passenger transport. Prog Photovolt: Res Appl 2012;20:639–49. https://doi.org/10.1002/pip.1199.
[74] Birnie DP. Solar-to-vehicle (S2V) systems for powering commuters of the future. J Power Sources 2009;186:539–42. https://doi.org/10.1016/j.jpowsour.2008.09.118.
[75] Rolink J, Rehtanz C. Large-scale modeling of grid-connected electric vehicles. IEEE Trans Power Deliv 2013;28:894–902. https://doi.org/10.1109/TPWRD.2012.2236364.
[76] Shepero M, Lingfors D, Widén J, Bright JM, Munkhammar J. Estimating the spatiotemporal potential of self-consuming photovoltaic energy to charge electric vehicles in rural and urban Nordic areas. J Renew Sustain Energy 2020;12. https://doi.org/10.1063/5.0006893.
[77] Alexeenko P, Bitar E. Achieving reliable coordination of residential plug-in electric vehicle charging: a pilot study. Transp Res D Transp Environ 2023;118. https://doi.org/10.1016/j.trd.2023.103658.
[78] Freitas S, Catita C, Redweik P, Brito MC. Modelling solar potential in the urban environment: state-of-the-art review. Renew Sustain Energy Rev 2015;41:915–31. https://doi.org/10.1016/j.rser.2014.08.060.
[79] Chen Z, Yang B, Zhu R, Dong Z. City-scale solar PV potential estimation on 3D buildings using multi-source RS data: a case study in Wuhan, China. Appl Energy 2024;359. https://doi.org/10.1016/j.apenergy.2024.122720.
[80] Batty M. Digital twins in city planning. Nat Comput Sci 2024;4:192–9. https://doi.org/10.1038/s43588-024-00606-7.
[81] Mehrjerdi H. Resilience-robustness improvement by adaptable operating pattern for electric vehicles in complementary solar-vehicle management. J Energy Storage 2021;37. https://doi.org/10.1016/j.est.2021.102454.
[82] Brinkel NBG, Gerritsma MK, AlSkaif TA, Lampropoulos I, van Voorden AM, Fidder HA, et al. Impact of rapid PV fluctuations on power quality in the low-voltage grid and mitigation strategies using electric vehicles. Int J Electr Power Energy Syst 2020;118. https://doi.org/10.1016/j.ijepes.2019.105741.
[83] Tong S, Fung T, Klein MP, Weisbach DA, Park JW. Demonstration of reusing electric vehicle battery for solar energy storage and demand side management. J Energy Storage 2017;11:200–10. https://doi.org/10.1016/j.est.2017.03.003.
[84] Luo J, Yuan Y, Joybari MM, Cao X. Development of a prediction-based scheduling control strategy with V2B mode for PV-building-EV integrated systems. Renew Energy 2024;224. https://doi.org/10.1016/j.renene.2024.120237.
[85] Wu Y, Aziz SM, Haque MH. Vehicle-to-home operation and multi-location charging of electric vehicles for energy cost optimisation of households with photovoltaic system and battery energy storage. Renew Energy 2024;221. https://doi.org/10.1016/j.renene.2023.119729.
[86] Mazzeo D, Matera N, De Luca R, Musmanno R. A smart algorithm to optimally manage the charging strategy of the Home to Vehicle (H2V) and Vehicle to Home (V2H) technologies in an off-grid home powered by renewable sources. Energy Syst 2024;15:715–52. https://doi.org/10.1007/s12667-022-00548-x.
[87] Ghafoori M, Abdallah M, Kim S. Electricity peak shaving for commercial buildings using machine learning and vehicle to building (V2B) system. Appl Energy 2023;340. https://doi.org/10.1016/j.apenergy.2023.121052.
[88] Heredia WB, Chaudhari K, Meintz A, Jun M, Pless S. Evaluation of smart charging for electric vehicle-to-building integration: a case study. Appl Energy 2020;266. https://doi.org/10.1016/j.apenergy.2020.114803.
[89] Sachan S, Deb S, Singh SN. Different charging infrastructures along with smart charging strategies for electric vehicles. Sustain Cities Soc 2020;60. https://doi.org/10.1016/j.scs.2020.102238.
[90] Spencer SI, Fu Z, Apostolaki-Iosifidou E, Lipman TE. Evaluating smart charging strategies using real-world data from optimized plugin electric vehicles. Transp Res D Transp Environ 2021;100. https://doi.org/10.1016/j.trd.2021.103023.
[91] Nour M, Said SM, Ali A, Farkas C. Smart charging of electric vehicles according to electricity price. In: 2019 International Conference on Innovative Trends in Computer Engineering (ITCE); 2019. p. 432–7. https://doi.org/10.1109/ITCE.2019.8646425.
[92] Mahmud K, Hossain MJ, Ravishankar J. Peak-load management in commercial systems with electric vehicles. IEEE Syst J 2019;13:1872–82. https://doi.org/10.1109/JSYST.2018.2850887.
[93] Gschwendtner C, Sinsel SR, Stephan A. Vehicle-to-X (V2X) implementation: an overview of predominate trial configurations and technical, social and regulatory challenges. Renew Sustain Energy Rev 2021;145. https://doi.org/10.1016/j.rser.2021.110977.
[94] Ghotge R, Nijssen KP, Annema JA, Lukszo Z. Use before You Choose: what do EV drivers think about V2G after experiencing It? Energies 2022;15. https://doi.org/10.3390/en15134907.
[95] Nutkani I, Toole H, Fernando N, Andrew LPC. Impact of EV charging on electrical distribution network and mitigating solutions – a review. IET Smart Grid 2024;7:485–502. https://doi.org/10.1049/stg2.12156.
[96] CHAdeMO Association. CHAdeMO 2025. https://www.chademo.com/(accessed October 29, 2025).
[97] ISO. ISO 15118-20:2022 road vehicles — vehicle to grid communication interface 2022. https://www.iso.org/standard/77845.html (accessed October 29, 2025).
[98] China Electricity Council and CHAdeMO. ChaoJi standard 2020. https://www.chademo.com/wp2016/wp-content/uploads/ChaoJi202006/ChaoJi0619JP.pdf (accessed November 10, 2025).
[99] Joint Office of Energy and Transportation. SAE J3400 charging connector 2026.
[100] NIST. Cybersecurity framework profile for electric vehicle extreme fast charging infrastructure 2026. https://www.nccoe.nist.gov/projects/cybersecurity-framework-profile-electric-vehicle-extreme-fast-charging-infrastructure (accessed July 16, 2026).
[101] EDPB. Guidelines 01/2020 on processing personal data in the context of connected vehicles and mobility related applications 2021.
[102] Mulenga E, Bollen MHJ, Etherden N. A review of hosting capacity quantification methods for photovoltaics in low-voltage distribution grids. Int J Electr Power Energy Syst 2020;115. https://doi.org/10.1016/j.ijepes.2019.105445.
[103] Qamar N, Arshad A, Mahmoud K, Lehtonen M. Hosting capacity in distribution grids: a review of definitions, performance indices, determination methodologies, and enhancement techniques. Energy Sci Eng 2023;11:1536–59. https://doi.org/10.1002/ese3.1389.
[104] Umoh V, Davidson I, Adebiyi A, Ekpe U. Methods and tools for PV and EV hosting capacity determination in low voltage distribution networks—a review. Energies 2023;16. https://doi.org/10.3390/en16083609.
[105] Chathurangi D, Jayatunga U, Perera S. Recent investigations on the evaluation of solar PV hosting capacity in LV distribution networks constrained by voltage rise. Renew Energy 2022;199:11–20. https://doi.org/10.1016/j.renene.2022.08.120.

[106] Chen C, Li W, Yu B, Wu L. An improved stochastic approach for PV's hosting capacity assessment based on binary search. In: The 10th Renewable Power Generation Conference (RPG 2021). 2021; 2021. p. 539–45. https://doi.org/10.1049/icp.2021.2225.
[107] Sun W, Harrison GP. Wind-solar complementarity and effective use of distribution network capacity. Appl Energy 2019;247:89–101. https://doi.org/10.1016/j.apenergy.2019.04.042.
[108] Li Y, Jenn A. Impact of electric vehicle charging demand on power distribution grid congestion. Proc Natl Acad Sci USA 2024;121. https://doi.org/10.1073/pnas.2317599121.
[109] Vargas MC, Batista OE, Yang Y. Estimation method of short-circuit current contribution of inverter-based resources for symmetrical faults. Energies 2023;16. https://doi.org/10.3390/en16073130.
[110] Fachrizal R, Ramadhani UH, Munkhammar J, Widén J. Combined PV–EV hosting capacity assessment for a residential LV distribution grid with smart EV charging and PV curtailment. Sustain Energy Grids Netw 2021;26. https://doi.org/10.1016/j.segan.2021.100445.
[111] Chathurangi D, Jayatunga U, Perera S, Agalgaonkar AP, Siyambalapitiya T. Comparative evaluation of solar PV hosting capacity enhancement using Volt-VAr and Volt-Watt control strategies. Renew Energy 2021;177:1063–75. https://doi.org/10.1016/j.renene.2021.06.037.
[112] Mohan S, Hasan S, Gebremariam Y, Varma RK. Increasing hosting capacity of PV solar systems using smart inverter volt-var control. In: 20th National Power Systems Conference (NPSC), IEEE; 2018.
[113] Soliman IA, Tulsky V, Abd el-Ghany HA, Azmy AM. Optimizing hosting capacity and spatial deployment of EV charging stations for V2G integration in zonal distribution networks. Appl Energy 2025;401. https://doi.org/10.1016/j.apenergy.2025.126671.
[114] Ali A, Mahmoud K, Lehtonen M. Enhancing hosting capacity of intermittent wind turbine systems using bi-level optimisation considering oltc and electric vehicle charging stations. IET Renew Power Gener 2020;14:3558–67. https://doi.org/10.1049/iet-rpg.2020.0837.
[115] Quijano DA, Melgar-Dominguez OD, Sabillon C, Venkatesh B, Padilha-Feltrin A. Increasing distributed generation hosting capacity in distribution systems via optimal coordination of electric vehicle aggregators. IET Gener Transm Distrib 2021;15:359–70. https://doi.org/10.1049/gtd2.12026.
[116] Huang P, Sandström M. Do smart charging and vehicle-to-grid strengthen or strain power grids with rising EV adoption? Insights from a Swedish residential network. Appl Energy 2025;401. https://doi.org/10.1016/j.apenergy.2025.126713.
[117] Bogdanov D, Breyer C. Role of smart charging of electric vehicles and vehicle-to-grid in integrated renewables-based energy systems on country level. Energy 2024;301. https://doi.org/10.1016/j.energy.2024.131635.
[118] IEA. Global critical minerals Outlook 2025. 2025.
[119] Chandra Mouli GR, Bauer P, Zeman M. System design for a solar powered electric vehicle charging station for workplaces. Appl Energy 2016;168:434–43. https://doi.org/10.1016/j.apenergy.2016.01.110.
[120] Vermeer W, Chandra Mouli GR, Bauer P. A comprehensive review on the characteristics and modeling of lithium-ion battery aging. IEEE Trans Transp Electrif 2022;8:2205–32. https://doi.org/10.1109/TTE.2021.3138357.
[121] Lehtola TA, Zahedi A. Electric vehicle battery cell cycle aging in vehicle to grid operations: a review. IEEE J Emerg Sel Top Power Electron 2021;9:423–37. https://doi.org/10.1109/JESTPE.2019.2959276.
[122] Leippi A, Fleschutz M, Murphy MD. A review of EV battery utilization in demand response considering battery degradation in non-residential vehicle-to-grid scenarios. Energies 2022;15. https://doi.org/10.3390/en15093227.
[123] Thompson AW. Economic implications of lithium ion battery degradation for Vehicle-to-Grid (V2X) services. J Power Sources 2018;396:691–709. https://doi.org/10.1016/j.jpowsour.2018.06.053.
[124] Adegbohun F, von Jouanne A, Agamloh E, Yokochi A. A review of bidirectional charging grid support applications and battery degradation considerations. Energies 2024;17. https://doi.org/10.3390/en17061320.
[125] Arias NB, Hashemi S, Andersen PB, Traeholt C, Romero R. V2G enabled EVs providing frequency containment reserves: field results. In: IEEE International Conference on Industrial Technology (ICIT), IEEE; 2018. https://doi.org/10.1109/ICIT.2018.8352459.
[126] Tepe B, Figgener J, Englberger S, Sauer DU, Jossen A, Hesse H. Optimal pool composition of commercial electric vehicles in V2G fleet operation of various electricity markets. Appl Energy 2022;308. https://doi.org/10.1016/j.apenergy.2021.118351.
[127] Kern T, Dossow P, Morlock E. Revenue opportunities by integrating combined vehicle-to-home and vehicle-to-grid applications in smart homes. Appl Energy 2022;307. https://doi.org/10.1016/j.apenergy.2021.118187.
[128] Heilmann C, Friedl G. Factors influencing the economic success of grid-to-vehicle and vehicle-to-grid applications—a review and meta-analysis. Renew Sustain Energy Rev 2021;145. https://doi.org/10.1016/j.rser.2021.111115.
[129] Andoni M, Robu V, Flynn D, Abram S, Geach D, Jenkins D, et al. Blockchain technology in the energy sector: a systematic review of challenges and opportunities. Renew Sustain Energy Rev 2019;100:143–74. https://doi.org/10.1016/j.rser.2018.10.014.
[130] Kim M, Park K, Yu S, Lee J, Park Y, Lee SW, et al. A secure charging system for electric vehicles based on blockchain. Sensors 2019;19. https://doi.org/10.3390/s19133028.
[131] Mengelkamp E, Gärttner J, Rock K, Kessler S, Orsini L, Weinhardt C. Designing microgrid energy markets: a case study: The Brooklyn Microgrid. Appl Energy 2018;210:870–80. https://doi.org/10.1016/j.apenergy.2017.06.054.
[132] Dusonchet L, Telaretti E. Comparative economic analysis of support policies for solar PV in the most representative EU countries. Renew Sustain Energy Rev 2015;42:986–98. https://doi.org/10.1016/j.rser.2014.10.054.
[133] Grau T, Huo M, Neuhoff K. Survey of photovoltaic industry and policy in Germany and China. Energy Policy 2012;51:20–37. https://doi.org/10.1016/j.enpol.2012.03.082.
[134] Zhang S, He Y. Analysis on the development and policy of solar PV power in China. Renew Sustain Energy Rev 2013;21:393–401. https://doi.org/10.1016/j.rser.2013.01.002.
[135] Kumar Sahu B. A study on global solar PV energy developments and policies with special focus on the top ten solar PV power producing countries. Renew Sustain Energy Rev 2015;43:621–34. https://doi.org/10.1016/j.rser.2014.11.058.
[136] Darghouth NR, Wiser RH, Barbose G, Mills AD. Net metering and market feedback loops: exploring the impact of retail rate design on distributed PV deployment. Appl Energy 2016;162:713–22. https://doi.org/10.1016/j.apenergy.2015.10.120.
[137] Karneyeva Y, Wüstenhagen R. Solar feed-in tariffs in a post-grid parity world: the role of risk, investor diversity and business models. Energy Policy 2017;106:445–56. https://doi.org/10.1016/j.enpol.2017.04.005.
[138] Department of Price Administration. National development and reform commission. Notice by the National Development and Reform Commission and the National Energy Administration on Deepening Market-oriented reform of feed-in tariffs for new energy to promote high-quality development of new energy [EB/OL]. 2025.
[139] BUNDESGESETZBLATT. Bundesgesetzblatt Teil I 2025. Gesetz zur Anderung des Energiewirtschaftsrechts zur Vermeidung von temporaren Erzeugungsuberschussen [EB/OL] 2025. https://www.clearingstelle-eeg-kwkg.de/sites/default/files/2025-02/BGBl._2025_I_Nr._51.pdf (accessed July 6, 2025).
[140] Solar Energy UK Team. Smart Export guarantee. Solar energy UK 2024. https://solarenergyuk.org/resource/smart-export-guarantee/(accessed July 6, 2025).
[141] Langbroek JHM, Franklin JP, Susilo YO. The effect of policy incentives on electric vehicle adoption. Energy Policy 2016;94:94–103. https://doi.org/10.1016/j.enpol.2016.03.050.
[142] Qiu YQ, Zhou P, Sun HC. Assessing the effectiveness of city-level electric vehicle policies in China. Energy Policy 2019;130:22–31. https://doi.org/10.1016/j.enpol.2019.03.052.
[143] Wang N, Tang L, Pan H. Effectiveness of policy incentives on electric vehicle acceptance in China: a discrete choice analysis. Transp Res Part A Policy Pract 2017;105:210–8. https://doi.org/10.1016/j.tra.2017.08.009.
[144] Zhang X, Liang Y, Yu E, Rao R, Xie J. Review of electric vehicle policies in China: content summary and effect analysis. Renew Sustain Energy Rev 2017;70:698–714. https://doi.org/10.1016/j.rser.2016.11.250.
[145] Abdul Qadir S, Ahmad F, Mohsin A B Al-Wahedi A, Iqbal A, Ali A. Navigating the complex realities of electric vehicle adoption: a comprehensive study of government strategies, policies, and incentives. Energy Strategy Rev 2024;53. https://doi.org/10.1016/j.esr.2024.101379.
[146] Tietge U, Mock P, Lutsey N, Campestrini A. Comparison of leading electric vehicle policy and deployment in Europe. 2016.
[147] Kumar P, Channi HK, Kumar R, Rajiv A, Kumari B, Singh G, et al. A comprehensive review of vehicle-to-grid integration in electric vehicles: powering the future. Energy Convers Manag: X 2025;25. https://doi.org/10.1016/j.ecmx.2024.100864.
[148] National Development and Reform Commission (NDRC). Guiding Opinions on Strengthening the Integration and Interaction of New Energy Vehicles and the Power Grid. State Council Policy Database[EB/OL]; 2023. https://www.gov.cn/zhengce/zhengceku/202401/content_6924347.htm (accessed July 6, 2025).
[149] Shanghai Municipal Development and Reform Commission. Management Measures for Reward Funds for Regulation Capacity of Shanghai's New Power System. Shanghai Government Portal [EB/OL]; 2025. https://fgw.sh.gov.cn/fgw_gfxwj/20250519/463852516eb64060b6962fb68c2b75fb.html (accessed July 6, 2025).
[150] Guangzhou Municipal People's Government. Three-Year Action Plan for Promoting the Development of Intelligent Connected New Energy Vehicle Industry in Guangzhou 2025. https://www.gz.gov.cn/zwgk/fggw/sfbgtwj/content/post_10322829.html (accessed July 6, 2025).
[151] U.S. Department of Transportation (USDOT). Saving Lives with Connectivity: A Plan to Accelerate V2X Deployment. Federal Highway Administration; 2024.
[152] California State Legislature. Senate Bill No. 233: electric vehicles: bidirectional capability .Legislative Counsel Bureau 2024. https://leginfo.legislature.ca.gov/faces/billTextClient.xhtml?bill_id=202320240SB233 (accessed July 6, 2025).
[153] Federal Ministry for Economic Affairs and Climate Action (Germany). Energy Industry Act (Energiewirtschaftsgesetz - EnWG), 14a: requirements for charging infrastructure. Federal Law Gazette I p. 32, as amended 2024. https://www.gesetze-im-internet.de/enwg_2005/__14a.html (accessed July 6, 2025).
[154] EUPD. Bidirectional charging in Germany – a key innovation in the energy transition 2025. https://eupd-group.com/bidirectional-charging-in-germany-a-key-innovation-in-the-energy-transition/(accessed July 6, 2025).
[155] UK Government. V2X innovation programme: phase 1 projects 2024. https://www.gov.uk/government/publications/v2x-innovation-programme-successful-projects/v2x-innovation-programme-phase-1-successful-projects (accessed July 6, 2025).
[156] CRE. Projet BienVEnu: Borne de recharge collective en habitat urbain . Île-de-France Mobilités 2020. https://www.cre.fr/documents/fiches-demonstrateurs-smartgrids/bienvenu.html (accessed July 6, 2025).

[157] IEA. EV Infrastructure Charging Program (ADVENIR) 2025. https://www.iea.org/policies/2716-ev-infrastructure-charging-program-advenir (accessed July 6, 2025).
[158] Kobashi T, Zusman E, Taniguchi M, Yarime M. Facilitating a carbon neutral transition in Kyoto: initiatives on rooftop photovoltaics integrated with electric vehicles. Technol Soc 2025;80. https://doi.org/10.1016/j.techsoc.2024.102774.
[159] Loorbach D, Shiroyama H. The challenge of sustainable urban development and transforming cities. 2016. https://doi.org/10.1007/978-4-431-55426-4_1.
[160] Sovacool BK, Barnacle ML, Smith A, Brisbois MC. Towards improved solar energy justice: exploring the complex inequities of household adoption of photovoltaic panels. Energy Policy 2022;164. https://doi.org/10.1016/j.enpol.2022.112868.
[161] Ball-Burack A, Lamm T, Goel R, Alex K, Kammen DM. Examining racial/ethnic and socioeconomic disparities in access to California's electric vehicle charging infrastructure. Commun Sustain 2026;1:130. https://doi.org/10.1038/s44458-026-00133-8.
[162] Hoesch KW, Bessette DL, Bednar DJ. Locally charged: Energy justice outcomes of a low-income community solar project in Michigan. Energy Res Soc Sci 2024;113. https://doi.org/10.1016/j.erss.2024.103569.
[163] World Bank. Population, total 2025. https://data.worldbank.org/indicator/SP.POP.TOTL (accessed November 10, 2025).
[164] EIA. Electricity 2026. https://www.eia.gov/international/data/world/electricity/electricity-consumption?pd=2&p=0000002&u=0&f=A&v=mapbubble&a=-&i=none&vo=value&t=C&g=00000000000000000000000000000000000000000000000001&l=249-ruvvvvvfvtvnvv1vrvvvvfvvvvvvfvvvou20evvvvvvvvvvvnvvvs0008&s=315532800000&e=1704067200000 (accessed April 27, 2026).
[165] BNEF. Long-term electric vehicle Outlook 2025. 2025.
[166] BNEF. EV Outlook 2026. 2026.
[167] BNEF. Data: generation 2026.
[168] BNEF. Data: capacity 2026.
[169] IEA PVPS. Trends in photovoltaic applications 2025. 2025.
[170] Clean Energy Regulator. Small-scale installation postcode data 2026. https://cer.gov.au/markets/reports-and-data/small-scale-installation-postcode-data (accessed July 1, 2026).
[171] Clean Energy Council. Clean Energy Australia 2026. 2026.
[172] Australian Automobile Association. Electric vehicle index 2026. https://www.aaa.asn.au/research-data/electric-vehicle/(accessed July 1, 2026).
[173] Electric Vehicle Council. State of electric vehicles 2025. 2025.
[174] Commonwealth of Australia. Capacity investment scheme 2026. https://www.dcceew.gov.au/energy/renewable/capacity-investment-scheme (accessed July 1, 2026).
[175] Clean Energy Regulator. Large-scale renewable energy target 2025. https://cer.gov.au/schemes/large-scale-renewable-energy-target (accessed July 1, 2026).
[176] Clean Energy Regulator. Small-scale renewable energy scheme 2025. https://cer.gov.au/schemes/renewable-energy-target/small-scale-renewable-energy-scheme (accessed July 1, 2026).
[177] Commonwealth of Australia. Cheaper home batteries program 2026. https://www.dcceew.gov.au/energy/programs/cheaper-home-batteries (accessed July 1, 2026).
[178] Clean Energy Regulator. Electricity sector emissions and generation data 2024–25 2026. https://cer.gov.au/markets/reports-and-data/nger-reporting-data-and-registers/electricity-sector-emissions-and-generation-data-2024-25 (accessed July 1, 2026).
[179] Commonwealth of Australia. New vehicle efficiency standard 2026. https://www.infrastructure.gov.au/infrastructure-transport-vehicles/vehicles/new-vehicle-efficiency-standard (accessed July 1, 2026).
[180] ARENA. Origin energy electric vehicles smart charging trial 2026. https://arena.gov.au/projects/origin-energy-electric-vehicles-smart-charging-trial/(accessed July 1, 2026).
[181] ARENA. AGL electric vehicle orchestration trial 2026. https://arena.gov.au/projects/agl-electric-vehicle-orchestration-trial/(accessed July 1, 2026).
[182] ARENA. Amber – automating EV charging in line with wholesale pricing 2026. https://arena.gov.au/projects/amber-automating-ev-charging-in-line-with-wholesale-pricing/(accessed July 1, 2026).
[183] ARENA. National roadmap for bidirectional EV charging in Australia 2025. https://arena.gov.au/knowledge-bank/national-roadmap-for-bidirectional-ev-charging-in-australia/(accessed July 1, 2026).
[184] ARENA. Realising electric vehicle-to-grid services 2026. https://arena.gov.au/projects/realising-electric-vehicle-to-grid-services/(accessed July 1, 2026).
[185] Schmidt B. Available V2G EV chargers in Australia compared 2026. https://www.solarchoice.net.au/ev/charging/available-v2g-chargers-australia (accessed July 1, 2026).
[186] AEMO. Quarterly energy dynamics Q1 2026. 2026.
[187] Heslop S, Stringer N, Yildiz B. Voltage analysis of the LV distribution network in the australian national electricity market . 2020.
[188] AEMO. AS/NZS 4777.2 – inverter requirements standard 2026. https://www.aemo.com.au/initiatives/major-programs/nem-distributed-energy-resources-der-program/standards-and-connections/as-nzs-4777-2-inverter-requirements-standard (accessed July 1, 2026).
[189] Standards Australia. What's new in AS/NZS 4777.1:2024? Key updates for inverter energy systems 2024. https://www.standards.org.au/blog/as-nzs-4777-updates (accessed July 1, 2026).
[190] Roberts MB, Adams SM, Kuch D. Social license to automate batteries? Australian householder conditions for participation in Virtual Power Plants. Energy Res Soc Sci 2023;104. https://doi.org/10.1016/j.erss.2023.103241.
[191] AEMO. 2024 Integrated System Plan (ISP) 2024. https://www.aemo.com.au/energy-systems/major-publications/integrated-system-plan-isp/2024-integrated-system-plan-isp (accessed July 1, 2026).
[192] National Energy Administration. 2025 Renewable energy grid-connected operation status 2026. https://www.nea.gov.cn/20260212/742b8c6a078347b0b39de676c05c5d58/c.html (accessed July 1, 2026).
[193] Dong C, Zhou R, Li J. Rushing for subsidies: the impact of feed-in tariffs on solar photovoltaic capacity development in China. Appl Energy 2021;281. https://doi.org/10.1016/j.apenergy.2020.116007.
[194] National Development and Reform Commission. 14th Five-year plan for renewable energy development. 2022.
[195] Ministry of commerce of People's Republic of China. Quality-driven growth: China's auto industry gains new momentum in 2025! 2026. https://is.mofcom.gov.cn/sqfb/art/2026/art_05da3ec9b1ac4278a37efa7e9127f40f.html (accessed July 1, 2026).
[196] National Energy Administration. The National Energy Administration released data on national electric vehicle charging infrastructure in December 2025 2026. https://www.nea.gov.cn/20260121/da0f536fbafe4545820a2f64465e773b/c.html (accessed July 1, 2026).
[197] National Development and Reform Commission. Notice on announcing the first batch of pilot projects for large-scale application of vehicle-to-network interaction (NDRC Energy Office [2025]No. 241). https://www.ndrc.gov.cn/xxgk/zcfb/tz/202504/t20250402_1396958.html; 2025 (accessed July 1, 2026).
[198] National Development and Reform Commission. List of pilot projects for the large-scale application of vehicle-to-grid integration 2025. https://www.ndrc.gov.cn/xxgk/zcfb/tz/202504/P020250402324114355009.pdf (accessed July 1, 2026).
[199] Government of Shenzhen. The nation's first "photovoltaic-storage-supercharging + vehicle-to-grid interaction + electric vehicle integration" demonstration station was put into operation in Shenzhen 2024. https://www.sz.gov.cn/cn/xxgk/zfxxgj/zwdt/content/post_11708363.html (accessed July 1, 2026).
[200] China South Power Grid. Three national firsts and the largest vehicle-to-grid supercharging demonstration station in the Guangdong-Hong Kong-Macao Greater Bay Area, featuring megawatt-level charging and discharging capabilities, have been put into operation in Shenzhen. https://www.csg.cn/xwzx/2026/2026gsyw/202604/t20260414_354611.html; 2026 (accessed July 1, 2026).
[201] National Standardization Management Committee. New national standards released: "Hard constraints" now apply to charging pile interoperability and V2G development 2025. https://www.163.com/dy/article/K9R7PBS605522QGX.html (accessed July 1, 2026).
[202] State grid CEC. White paper on ChaoJi conductive charging technology for electric vehicles. 2020.
[203] KopherBir. ISO 15118-20: Bidirectional V2G charging and MCS communication standard 2026. https://kopherbit.com/knowledge/iso-15118-20-v2g-bidirectional-charging/(accessed July 1, 2026).
[204] Wise Wish. Differences between European and Chinese standard communication protocols for charging piles 2025. https://wisewish.cn/zh/communication-protocol/(accessed July 1, 2026).
[205] National Development and Reform Commission. Guiding opinions on accelerating the development of virtual power plants (NDRC Energy [2025]No. 357). https://www.ndrc.gov.cn/xxgk/zcfb/tz/202504/t20250411_1397162.html; 2025 (accessed July 1, 2026).
[206] Yang Y, Wang W, Qin J, Wang M, Ma Q, Zhong Y. Review of vehicle to grid integration to support power grid security. Energy Rep 2024;12:2786–800. https://doi.org/10.1016/j.egyr.2024.08.069.
[207] Li K, Li X, Xiong Z, Tao S, Zhao G, Jiang Y, et al. Unlocking vehicle-to-grid potential of load shifting in China's megacities considering comprehensive real-world behaviors. Nat Commun 2025;16. https://doi.org/10.1038/s41467-025-65073-8.
[208] Yang J, Zhou K. Assessing the potential of combined vehicle-to-grid and rooftop photovoltaics strategies for reshaping city-level power load profiles. Transp Policy 2026;178. https://doi.org/10.1016/j.tranpol.2025.103952.
[209] Tsinghua University. [Voices from the two sessions] Ouyang Minggao: promoting the development of Vehicle-to-Grid (V2G) energy storage technology for electric vehicles 2022.
[210] Rte. Annual electricity review 2025 2026. https://analysesetdonnees.rte-france.com/en (accessed July 1, 2026).
[211] Avere. [Barometer] May 2026: EVs confirm their place in the mobility choices of the French 2026. https://www.avere-france.org/publication/barometre-avril-2026-le-ve-confirme-son-ancrage-dans-les-choix-de-mobilite-des-francais/(accessed July 1, 2026).
[212] IEA PVPS. National survey report of PV power applications in France 2024 2025. https://iea-pvps.org/wp-content/uploads/2025/08/FS-NSR-France-2024.pdf (accessed July 1, 2026).
[213] electrive. Renault and the mobility house launch V2G project in France 2024. https://www.electrive.com/2024/10/22/renault-and-the-mobility-house-launch-v2g-project-in-france/(accessed October 30, 2025).
[214] Factor this. France's 'AMI 1.5': the Linky meter sets global standards 2025. https://www.renewableenergyworld.com/power-grid/smart-grids/frances-ami-1-5-the-linky-meter-sets-global-standards/(accessed October 30, 2025).
[215] Mobility House Energy. Elli and the mobility house energy bring vehicle-to-grid offer to the volume market 2026. https://mobilityhouse-energy.com/int_en/news/article/elli-and-the-mobility-house-energy-bring-vehicle-to-grid-offer-to-the-volume-market (accessed July 1, 2026).

[216] Mobility House Energy. Which EVs support V2G? 2025. https://mobilityhouse-energy.com/int_en/knowledge-center/article/which-cars-are-v2g-capable (accessed July 1, 2026).
[217] Mobilize. electric car charging: Mobilize simplicity serves Renault 5 E-Tech electric 2026. https://www.mobilize.com/en/wearemobilizers/electric-car-charging-mobilize-simplicity-serves-renault-5-e-tech-electric/(accessed July 1, 2026).
[218] Forum Renault ZOE. Mobilize powerbox V2G - V2L (R5 electrique) 2018. https://renault-zoe.forumpro.fr/t19632-mobilize-powerbox-v2g-v2l-r5-electrique#google_vignette (accessed July 1, 2026).
[219] Ministry of New and Renewable Energy. India ranks third globally in renewable energy installed capacity: Shri Pralhad Joshi 2026. https://www.pib.gov.in/PressReleasePage.aspx?PRID=2250039&lang=1&reg=3 (accessed June 29, 2026).
[220] Ministry of New and Renewable Energy. Physical achievements 2026.
[221] Press Information Bureau (PIB) Government of India. India's solar momentum 2025. https://www.pib.gov.in/PressReleasePage.aspx?PRID=2199729&lang=1&reg=3 (accessed June 29, 2026).
[222] Pandit A, Shukla A, Marathe A. Insights on distributed energy resources (DERs) policy support in India. 2024.
[223] JMK. India's EV penetration reached 8.5% in FY2025-26 2026. https://jmkresearch.com/indias-ev-penetration-reached-8-5-in-fy2025-26/(accessed June 29, 2026).
[224] Press Information Bureau (PIB) Government of India. Electric vehicle charging stations 2025. https://www.pib.gov.in/PressReleasePage.aspx?PRID=2204635&lang=2&reg=3 (accessed June 29, 2026).
[225] Kouamé AT. Gearing up for India's rapid urban transformation 2024. https://www.worldbank.org/en/news/opinion/2024/01/30/gearing-up-for-india-s-rapid-urban-transformation (accessed June 29, 2026).
[226] IIT Bombay. V2G Field Trials 2026. https://www.ese.iitb.ac.in/~gil/v2g-trials/(accessed June 29, 2026).
[227] Rather ZH, Nath AP, Patankar PP, Manikanta D V. Techno-economic analysis and recommendations for V2X implementation in India. 2023.
[228] Central Electricity Authority. Electric vehicles utilization for vehicle-to-grid (V2G) services. 2023.
[229] Ministry of Power. Charging infrastructure for electric vehicles 2022. https://powermin.gov.in/sites/default/files/webform/notices/Final_Consolidated_EVCI_Guidelines_January_2022_with_ANNEXURES.pdf (accessed September 9, 2025).
[230] Oxford Institute for Energy Studies. The rise of distributed energy resources: a case study of India's Power market 2024. https://www.oxfordenergy.org/publications/the-rise-of-distributed-energy-resources-a-case-study-of-indias-power-market (accessed September 9, 2025).
[231] CSTEP. The future of virtual power plants in India 2024.
[232] Press Information Bureau. Implementation of time of day electricity tariff system 2023. https://www.pib.gov.in/PressReleaseIframePage.aspx?PRID=1945236 (accessed September 9, 2025).
[233] Indian Express. Move towards differential time-of-day power tariffs 2023. https://indianexpress.com/article/explained/explained-economics/differential-time-of-day-power-tariff-impact-8688235 (accessed September 9, 2025).
[234] Ember. Powering India's solar future through household demand flexibility 2025. https://ember-energy.org/app/uploads/2025/04/Policy-Paper-Powering-Indias-solar-future-through-household-demand-flexibility.pdf (accessed September 9, 2025).
[235] ET Auto. V2G tech can rewrite energy playbook in India 2025. https://auto.economictimes.indiatimes.com/news/auto-technology/v2g-tech-can-rewrite-energy-playbook-in-india/117260124 (accessed September 9, 2025).
[236] IAS Gyan. About V2G: powering India's grid future 2025. https://www.iasgyan.in/daily-current-affairs/v2g-technology-and-power-sector (accessed September 9, 2025).
[237] AEEE. Vehicle-grid integration – a new frontier. 2020.
[238] Regulatory Assistance Project. Policy and regulatory tools to assist achievement of India's low carbon goals 2024. https://www.raponline.org/toolkit/india-regulatory-knowledge-centre (accessed September 9, 2025).
[239] MEMR. Handbook of Energy & Economic Statistics of Indonesia 2024. 2025.
[240] Huda M, Tokimatsu K, Aziz M. Techno economic analysis of vehicle to grid (V2G) integration as distributed energy resources in Indonesia power system. Energies 2020;13. https://doi.org/10.3390/en13051162.
[241] Tampubolon JV, Dalimi R, Sudiarto B. Rooftop photovoltaics as negative load to mitigate electric vehicle charging peaks in Jamali grid by 2060 to achieve net zero emission in Indonesia. World Electr Veh J 2026;17. https://doi.org/10.3390/wevj17020085.
[242] METI. Guidelines for promoting the development of EV charging infrastructure formulated 2023. https://www.meti.go.jp/english/press/2023/1018_002.html (accessed July 5, 2026).
[243] ISEP. The share of renewable energy in electricity in 2025 (calendar year) – Domestic solar power generation to reach 10%, further expansion of renewable energy is urgently needed. 2026.
[244] Government of Japan. Strategic energy plan. 2025.
[245] JPEA. PV outlook 2050 . 2024.
[246] IEA-PVPS. Japan 2025 country update 2026. https://iea-pvps.org/about-iea-pvps/members/japan/(accessed July 5, 2026).
[247] nichicon. Introducing grid interconnected V2H system 2018. https://www.nichicon.co.jp/new/new231.html (accessed June 18, 2021).
[248] Nissan. Summary of V2G demonstration project. 2019.
[249] Chubu Electric Power. V2G aggregator demonstration project using EV battery. 2019.
[250] Mitsubishi Motors. Japan's first home-use V2G/V2H demonstration (charging and discharging demonstration) using electric vehicles begins 2025. https://www.mitsubishi-motors.com/jp/newsroom/newsrelease/2025/20251106_1.html (accessed July 5, 2026).
[251] METI. Technology roadmap for "transition finance" in automobile sector. 2023.
[252] Open data. Renewable electricity; production and capacity 2026. https://opendata.cbs.nl/#/CBS/en/dataset/82610ENG/table (accessed July 2, 2026).
[253] Central Bureau of Statistics. Most solar panels installed at commercial premises 2025. https://www.cbs.nl/en-gb/news/2025/32/most-solar-panels-installed-at-commercial-premises (accessed July 2, 2026).
[254] Statista. Solar photovoltaic capacity per inhabitant in the Netherlands from 2013 to 2024 (in watts per inhabitant) 2025. https://www.statista.com/statistics/800591/solar-photovoltaics-capacity-per-inhabitant-netherlands/(accessed July 2, 2026).
[255] RVO EV dashboard. RVO EV dashboard 2026. https://duurzamemobiliteit.databank.nl/mosaic/en-us/elektrisch-vervoer/personenauto-s (accessed July 2, 2026).
[256] Roks M. Vehicle-to-Everything (V2X) in the Netherlands 2019. https://www.rvo.nl/files/file/2023-07/V2X%20in%20the%20Netherlands-%20Report.pdf (accessed July 2, 2026).
[257] Chandra Mouli GR, Schijffelen J, Van Den Heuvel M, Kardolus M, Bauer P. A 10 kW solar-powered bidirectional EV Charger compatible with Chademo and COMBO. IEEE Trans Power Electron 2019;34:1082–98. https://doi.org/10.1109/TPEL.2018.2829211.
[258] Chandra Mouli GR, Bauer P, Zeman M. Comparison of system architecture and converter topology for a solar powered electric vehicle charging station. In: 2015 9th International Conference on Power Electronics and ECCE Asia (ICPE–ECCE Asia); 2015. p. 1908–15.
[259] Dumiak M. Utrecht leads the world in using EVs for grid storage. IEEE Spectr 2022;59:20–5.
[260] ElaadNL. Technical requirements for purchasing and operating smart and bidirectional charging infrastructure. 2025.
[261] We drive solar. Renault Group & We Drive Solar introduceren allereerste V2G AC-laden service in Nederland 2026. https://www.wedrivesolar.nl/(accessed July 2, 2026).
[262] Renault Group. Renault Group, We Drive Solar and MyWheels join forces with the city of Utrecht to launch Europe's first V2G enabled car-sharing service 2024. https://media.renaultgroup.com/renault-group-we-drive-solar-and-mywheels-join-forces-with-the-city-of-utrecht-to-launch-europes-first-v2g-enabled-car-sharing-service/(accessed June 16, 2025).
[263] Netbeheer Nederland. Capaciteitskaart [electricity grid capacity map] 2026. https://www.netbeheernederland.nl/netcapaciteit-en-flexibiliteit/capaciteitskaart?utm (accessed July 2, 2026).
[264] Tennet. Investeringsplannen 2026. https://www.tennet.eu/nl/over-tennet/publicaties/investeringsplannen (accessed July 2, 2026).
[265] MOTIE. The 11th basic plan for long-term electricity supply and demand (2024–2038) 2025.
[266] The Government of the Republic of Korea. 2050 Carbon neutral strategy of the Republic of Korea: towards a sustainable and green society 2020.
[267] Jowett P. South Korea's 2024 Solar Additions Surpassed 3.1 GW. PV Magazine; 2025. https://www.pv-magazine.com/2025/04/17/south-koreas-2024-solar-additions-surpassed-3-1-gw/ (accessed June 29, 2026).
[268] Ember. South Korea: electricity data. Electr. Data Explor. 2025 https://ember-energy.org/data/electricity-data-explorer/ (accessed June 29, 2026).
[269] IEA PVPS. IEA PVPS country updates 2025. 2026.
[270] Ministry of Climate, Energy and Environment (MCEE), Republic of Korea. Early milestone: 100,000 New EV registrations… Government backs the 1 million EV era. 2026.
[271] The Korea Herald. Korea has one charger for every 1.7 electric cars 2025. https://www.koreaherald.com/article/10409377 (accessed June 29, 2026).
[272] Ministry of Data and Statistics Republic of Korea. 2024 Population and housing census (register-based census) n.d. https://mods.go.kr/board.es?act=view&bid=11747&list_no=439064&mid=a20108010000&utm (accessed June 29, 2026).
[273] Ministry of Land, Infrastructure and Transport, Republic of Korea. 2024 Urban planning statistics. 2025.
[274] Kia. Hyundai Motor Group Expands EV energy services with vehicle to grid and vehicle to home 2025. https://worldwide.kia.com/en/newsroom/view/?id=161028 (accessed June 29, 2026).
[275] Seoul Metropolitan Government. Seoul announced five-year plan to tackle climate issues 2022.
[276] Kim & Chang. Pre-announcement of legislation of subordinate laws of the special act on promotion of distributed energy 2024. https://www.kimchang.com/en/insights/detail.kc?idx=28740&sch_section=4 (accessed June 29, 2026).
[277] Park K, Jang D, Kim S, Lim Y, Lee J. A grid-friendly electric vehicle infrastructure. IEEE Power Energy Mag 2023;21:28–37.
[278] Korea Bizwire. S. Korea strengthens mandatory EV charger installation requirements for apartment complexes 2021.
[279] Min-ho J. EV-Caused Fire in Incheon Raises Concerns About Lithium-Ion Batteries. The Korea Times; 2024.
[280] The Ministry of Land, Infrastructure and Transport, Republic of Korea. Building energy efficiency ratings to ZEB for more eco-friendly housing. 2025.
[281] EIA. Record U.S. small-scale solar capacity was added in 2022 2023. https://www.eia.gov/todayinenergy/detail.php?id=60341#:~:text=Many%20of%20the%20states%20with,at%20541%20watts%20per%20capita (accessed October 27, 2025).
[282] EPA. Summary of Inflation Reduction Act provisions related to renewable energy 2025. https://www.epa.gov/green-power-markets/summary-inflation-reduction-act-provisions-related-renewable-energy (accessed October 27, 2025).

[283] Lemay AC, Wagner S, Rand BP. Current status and future potential of rooftop solar adoption in the United States. Energy Policy 2023;177. https://doi.org/10.1016/j.enpol.2023.113571.
[284] Dillman-Hasso NH, Sintov ND. Can we achieve equity in residential solar adoption? Public perceptions of rooftop and community solar in the United States. Energy Res Soc Sci 2025;122. https://doi.org/10.1016/j.erss.2025.104022.
[285] Wang J, Harper CD, Hendrickson C. Changing US electric vehicle owner socioeconomic characteristics. Transp Res Interdiscip Perspect 2026;35. https://doi.org/10.1016/j.trip.2025.101788.
[286] Javadnejad F, Jahanbakh M, Pinto CA, Saeidi A. Analyzing incentives and barriers to electric vehicle adoption in the United States. Environ Syst Decis 2024;44:575–606. https://doi.org/10.1007/s10669-023-09958-3.
[287] Alternative Fuels Data Center. Maps and data 2026. https://afdc.energy.gov/data (accessed July 1, 2026).
[288] EIA. Frequently Asked Questions (FAQs) 2026. https://www.eia.gov/tools/faqs/faq.php?id=427&t=3 (accessed July 1, 2026).
[289] WRI. Latest lessons from electric school bus vehicle-to-grid programs 2025. https://www.wri.org/update/electric-school-bus-v2g-lessons-examples (accessed October 27, 2025).
[290] arstechnica. Ford F-150 lightnings are powering the grid in first residential V2G pilot 2025. https://arstechnica.com/cars/2025/09/charging-the-grid-with-your-ev-first-us-residential-pilot-is-now-underway/(accessed October 27, 2025).
[291] Farrell AE, Sperling D, Arons SM, Brandt AR, Delucchi MA, Eggert A, et al. A low-carbon fuel standard for California part 1: technical analysis 2007.
[292] Sperling D, Yeh S, Farrell AE, Eggert A, Boardman A, Brandt AR, et al. A low-carbon fuel standard for California: part 2: policy analysis. 2007.
[293] SB1. The Million Solar Roof Act of California 2006. https://www.leginfo.ca.gov/pub/05-06/bill/sen/sb_0001-0050/sb_1_cfa_20060807_152401_sen_comm.html (accessed July 12, 2026).
[294] Shepardson D. California wants 1 million electric vehicles on roads by 2020. Detroit News 2010. https://geni.org/globalenergy/library/technical-articles/generation/energy-efficiency/california-wants-1-million-vehicles-on-roads-by-2020/index.shtml (accessed July 12, 2026).
[295] California Energy Commission (CEC). California surpasses 2.5 million ZEV sales 2026. https://www.energy.ca.gov/news/2026-01/california-surpasses-25-million-zev-sales (accessed July 12, 2026).
[296] Ayaburi F, Wu Y, Bamwisho K, Panthee B, Newman AM, Choi H, et al. A unified framework for siting Level 2 electric vehicle charging infrastructure. Transp Res D Transp Environ 2026;156. https://doi.org/10.1016/j.trd.2026.105333.
[297] Yui S, Furuya K. V2X products and social implementation in Japan-prospects from a "global warming problem" perspective. IEEJ Journal of Industry Applications, 12. Institute of Electrical Engineers of Japan; 2023. p. 541–7. https://doi.org/10.1541/ieejjia.22008421.
[298] Das HS, Rahman MM, Li S, Tan CW. Electric vehicles standards, charging infrastructure, and impact on grid integration: a technological review. Renew Sustain Energy Rev 2020;120. https://doi.org/10.1016/j.rser.2019.109618.
[299] Cajot S, Peter M, Bahu JM, Guignet F, Koch A, Maréchal F. Obstacles in energy planning at the urban scale. Sustain Cities Soc 2017;30:223–36. https://doi.org/10.1016/j.scs.2017.02.003.
[300] Loorbach D. Transition management for sustainable development: a prescriptive, complexity-based governance framework. Governance 2010;23:161–83. https://doi.org/10.1111/j.1468-0491.2009.01471.x.
[301] Wittmayer JM, Avelino F, van Steenbergen F, Loorbach D. Actor roles in transition: insights from sociological perspectives. Environ Innov Soc Transit 2017;24:45–56. https://doi.org/10.1016/j.eist.2016.10.003.
[302] Schot J, Geels FW. Strategic niche management and sustainable innovation journeys: theory, findings, research agenda, and policy. Technol Anal Strat Manag 2008;20:537–54. https://doi.org/10.1080/09537320802292651.