VERTICAL SECTION 1:33

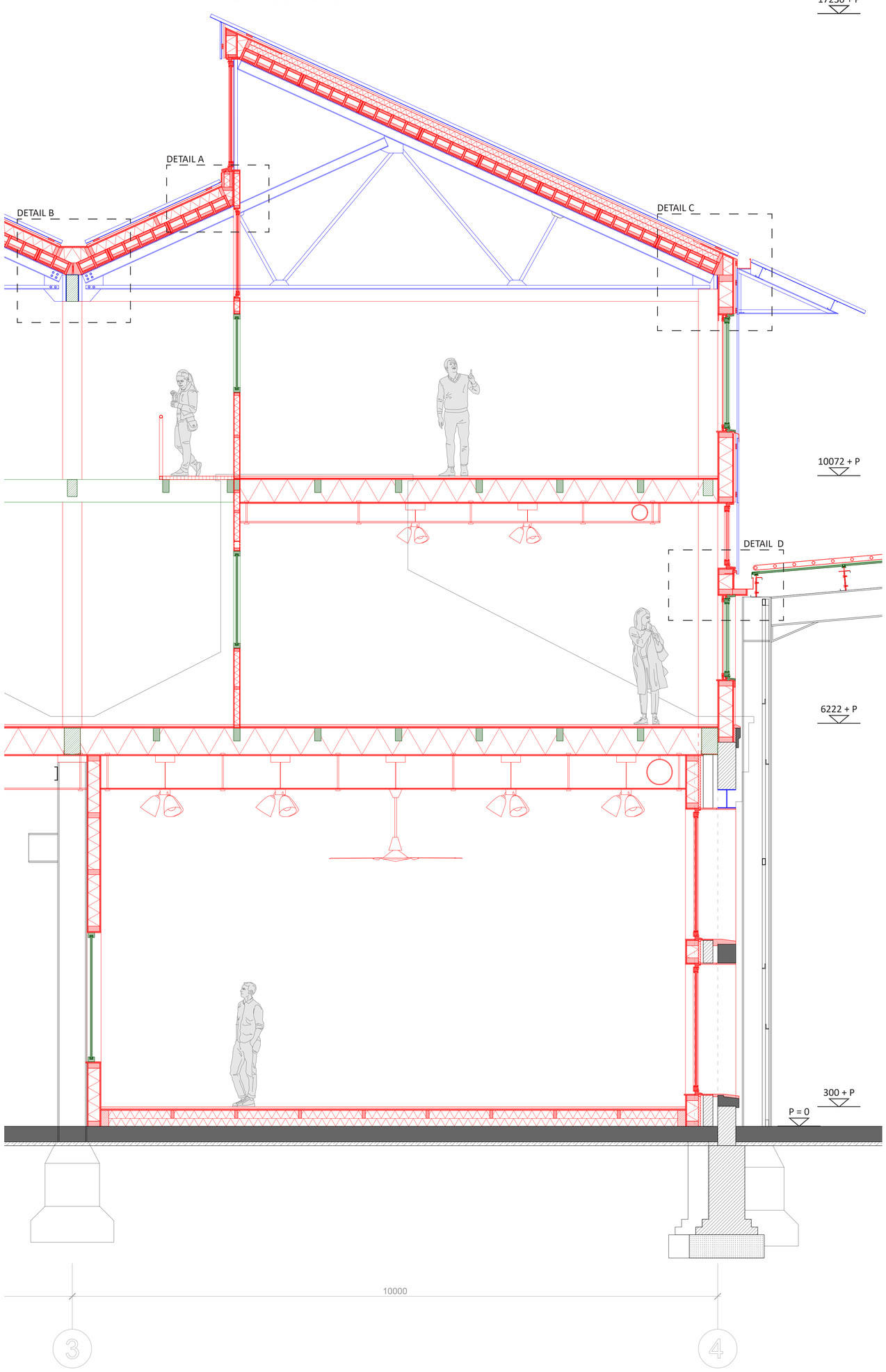

FACADE ELEVATION 1:33

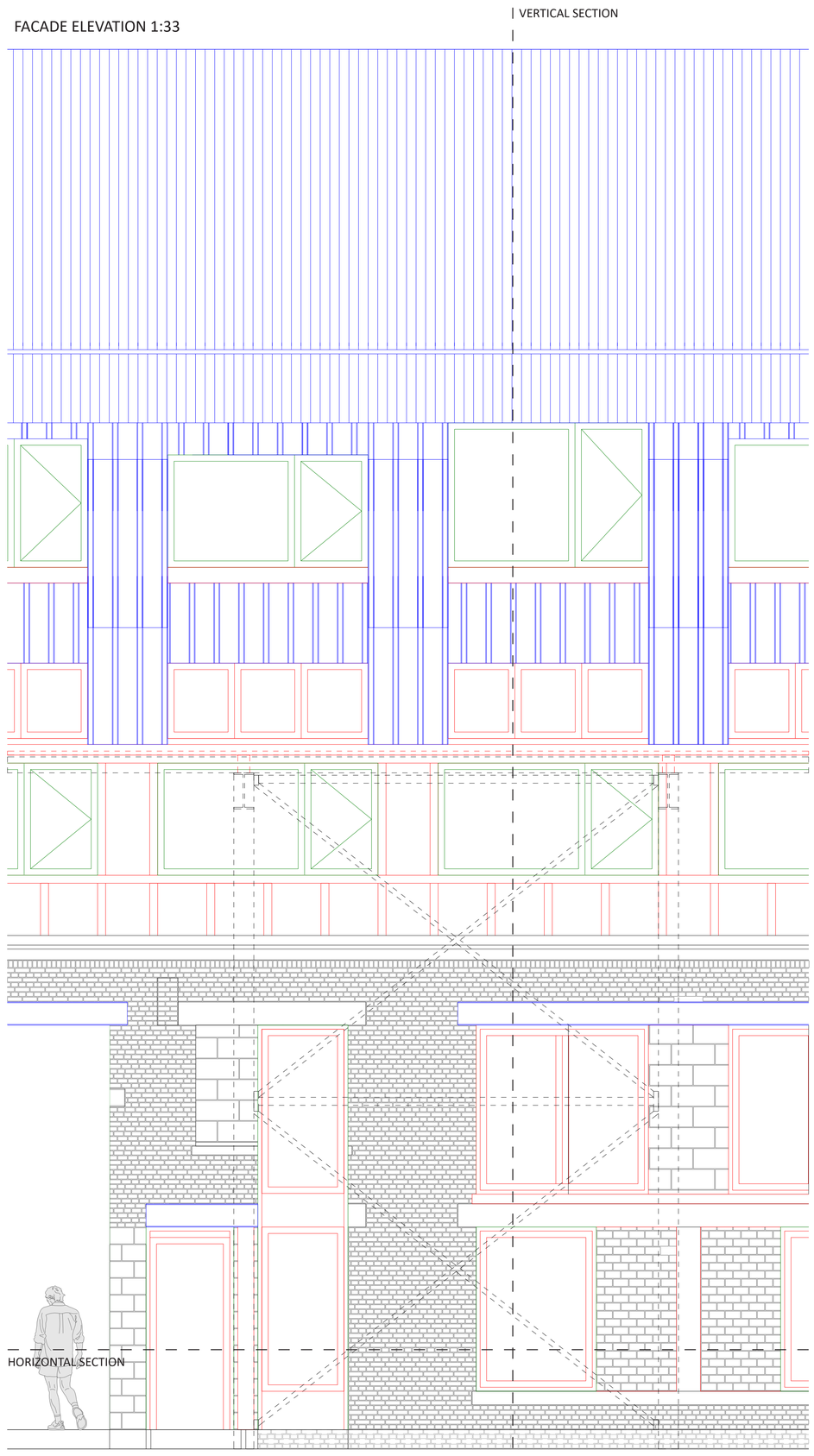

HORIZONTAL SECTION 1:33

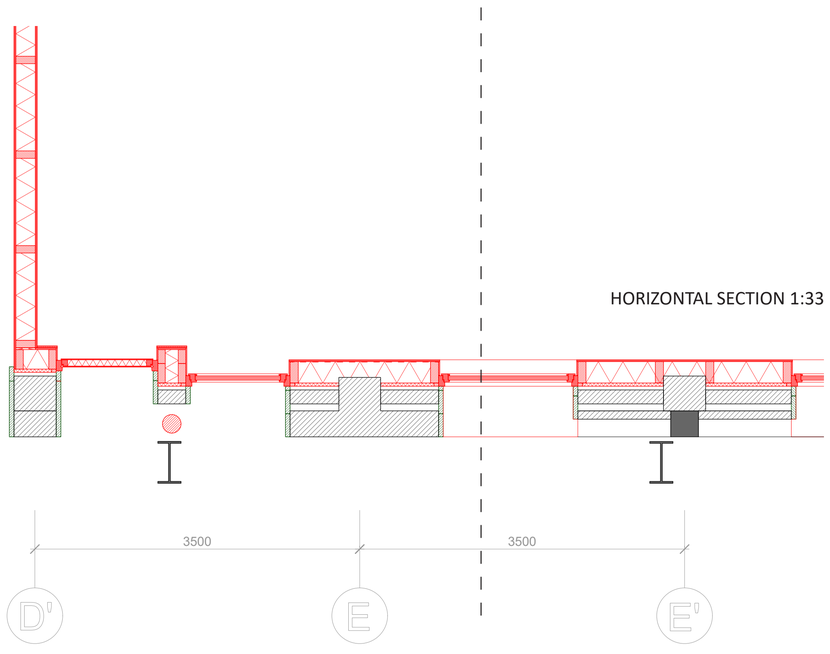

DETAIL A 1:10

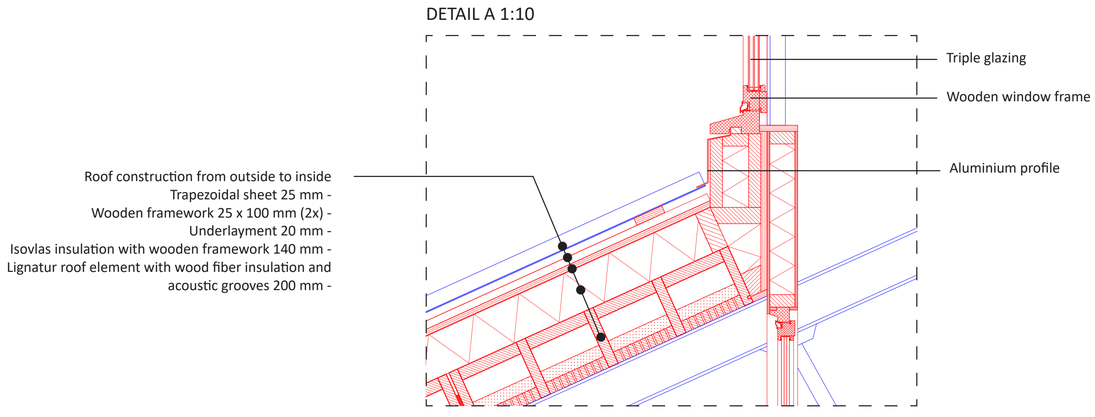

DETAIL B 1:10

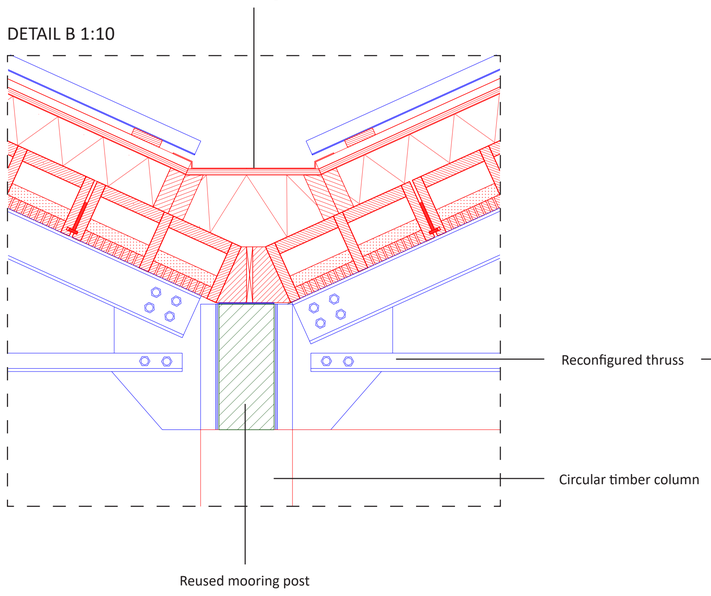

DETAIL C 1:10

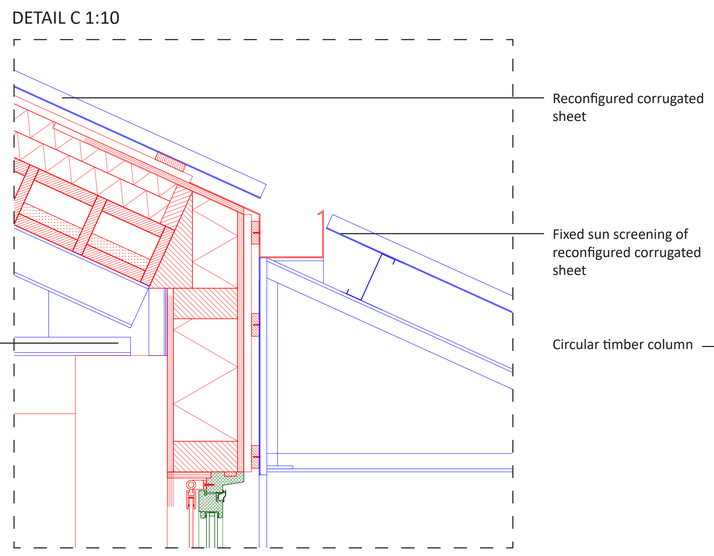

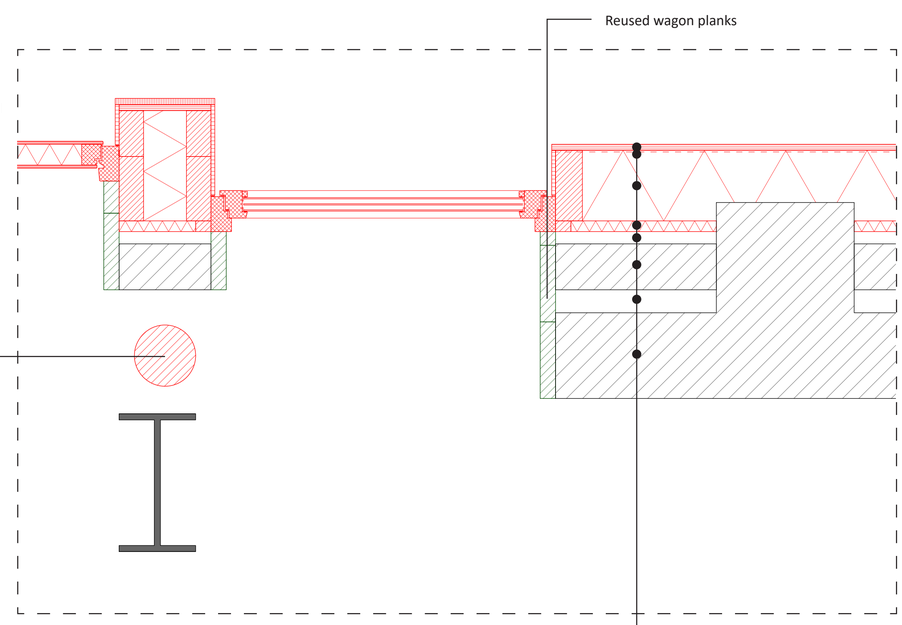
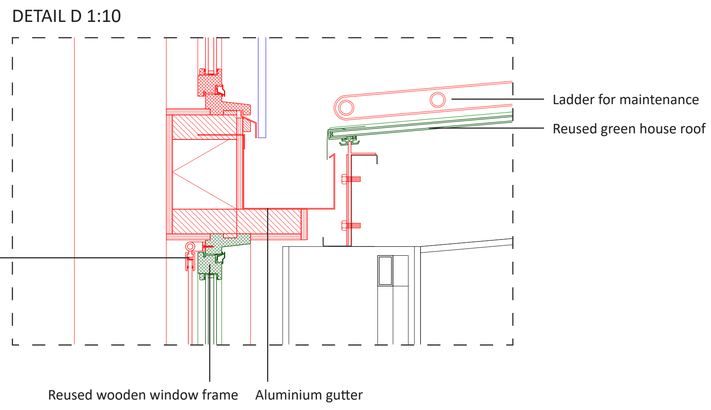
DETAIL D 1:10