A SURVEY OF FEATURES AND SYSTEMS

Digital Oblique Aerial Cameras (2)

In recent years, aerial photogrammetry has increasingly been using camera systems which capture nadir and oblique images at the same time. The number of oblique systems on offer in the marketplace for airborne geodata collection is growing steadily – a strong indicator that the technology is rapidly maturing. In this follow-up article, the author highlights oblique systems from Digicam, Dimac, Icaros, VisionMap and Wehrli.

The previous article on digital oblique aerial cameras, published in the April issue of *GIM International*, provided a general introduction to oblique aerial imagery and the diverse camera configurations which allow oblique image capture. The feature went on to address the following camera systems: Pictometry, Leica's RCD30 oblique, UltraCam Osprey, Midas from Track'Air, and the Trimble AOS. In addition, Phase One medium-format cameras were also discussed because they are increasingly being mounted as modules on arrays in a pattern that allows oblique image capture. The initial sources used to compile this survey included papers, brochures, factsheets, whitepapers and Geomatching.com, the product comparison website for hardware and software. In a subsequent stage, the manufacturers themselves were approached individually for their feedback.



Mathias Lemmens gained a PhD degree from Delft University of Technology, The Netherlands, where he presently lectures on geodata acquisition technologies and geodata quality on a part-time basis within the recently renewed MSc in Geomatics programme. He is the author of the book *Geo-information: Technologies, Applications and the Environment* published by Springer in 2011. He was editor-in-chief of *GIM International* for ten years and now contributes as senior editor.

✉ m.j.p.m.lemmens@tudelft.nl

DIGICAM

IGI, founded in 1978 and based in Kreuztal, Germany, introduced the Penta DigiCAM in 2008 (Figure 1). This camera system consists of 5 DigiCAM sensors, one that looks nadir and four sensors which view oblique under a tilt angle of 45 degrees. The oblique cameras have a focal length of 80mm, and for the nadir camera this length is 50mm. Three sizes of CCD chips are on offer: 60MP (8,964 x 6,716 pixels); 50MP (8,176 x 6,132 pixels) and 39MP (7,216 x 5,412 pixels). The pixels have a size of 6 micron and a radiometric resolution of 16 bit. Filters allow either RGB imagery or colour-infrared (CIR) imagery to be collected. The total weight is 55kg and the system fits in a box measuring 40.2 x 43.6 x 83 square centimetres. Another IGI system enabling the capture of oblique views is the Dual DigiCAM. This system is composed of two cameras which can be flexibly arranged to enlarge the swath width, to record RGB and CIR images simultaneously but also to capture along-track or across-track oblique images.

DIMAC

Cicade, an aerial survey company based in Belgium and founded in 1985, has developed a proprietary oblique camera system. The system is not for sale, and has instead been used for conducting aerial surveys by the company itself. Around 2000, the company recognised the new chances for photogrammetry in the digital era



Figure 1, A view of the casing of the Penta DigiCAM oblique camera system manufactured by IGI.

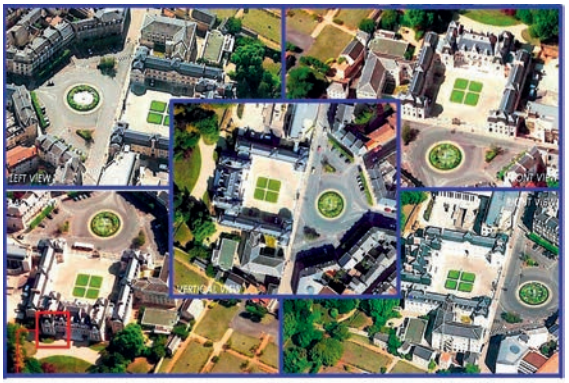

Figure 2, Oblique (GSD = 15cm) and vertical (GSD = 12cm) images of Poitiers, France, taken with the Dimac camera at the same time.

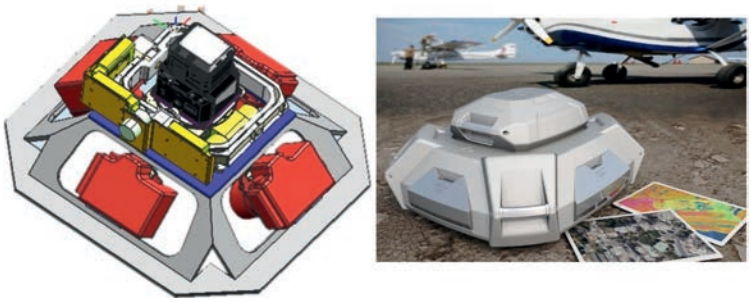

Figure 3, The IDM 1000 system consists of an IDM 200 nadir camera extended with four cameras tilted at 45 degrees with respect to nadir.

and decided to build itself a digital aerial camera. The initiative resulted in the Dimac line of modular camera systems and the establishment of the Dimac Systems company in 2004. The company intended to offer cameras to other aerial survey companies. But bringing highly specialised instruments to highly specialised costumers requires a global network. Therefore, in the summer of 2010, Dimac decided to divest part of its camera assets to Canada-based Optech which was well known for its airborne and ground-based laser scanners. The camera production activities moved to Optech's main factory in Vaughan and the Dimac system evolved into the CS-6500 (1.9kg) introduced in 2013; the CS-MS1920 (2.8kg) introduced in 2011; the CS-10000 (6kg) introduced in 2012; and the CS-15000 (12.2kg) introduced in 2012. Not part of the sale was the Dimac oblique system, in which the 6 metric cameras, all equipped with flight motion control, are arranged according to the Maltese cross configuration – two are looking nadir and four are viewing oblique. The size of the nadir-looking image is 116MP (13,000 x 8,900 pixels) and the oblique images each cover 60MP (6,700 x 9,000 pixels). Figure 2 shows a composite of the 5 Maltese cross images recorded in the same instant by the Dimac system.

SERIES ON OBLIQUE PHOTOGRAMMETRY

This fifth article adds to the series on oblique photogrammetry oblique camera systems as did the previous one (part 1; see the April 2014 issue of *GIM International*). The articles published in the January, February and March editions covered properties of oblique airborne imagery, automated processing and automatic building detection, respectively. The series is a joint initiative of EuroSDR Comm. 1, Delft University of Technology and University of Twente (ITC). Edited by Mathias Lemmens, the series is intended to cover concepts, applications, and camera systems and configurations currently available on the market. You are cordially invited to contribute or to submit comments or additions. To do so, please feel free to contact the editorial manager at wim.van.wegen@geomares.nl or the senior editor at m.j.p.m.lemmens@tudelft.nl.

IDM 1000

Established in 2004 and headquartered in Fairfax, VA, USA, Icaros, introduced the Icaros Digital Mapper (IDM) 1000 in 2013. The IDM 1000 system extends the IDM 200 nadir camera system with four oblique cameras, configured in a cross pattern and tilted 45 degrees with respect to nadir (Figure 3). The sensor of the nadir-looking RGB/NIR camera covers 80MP (10,328 x 7,760 pixels) and the sensors of the oblique RGB cameras cover 36.3MP. Each pixel has a size of 4.88 micron and a radiometric resolution of 14 bit. The cameras are calibrated and support a range of focal lengths. The system weighs 54kg and fits within a box measuring 61 x 53 x 30 square centimetres. The modular design allows easy interchange of RGB, NIR and thermal sensors while in the field. The system includes the Icaros Collection Suite (ICS) software for oblique-imagery mission planning, navigation, mission management and post-mission data processing. IDM1000 imagery can be processed with photogrammetric tools such as the Icaros Photogrammetric Suite (IPS), which includes automatic aerial triangulation and bundle block adjustment of oblique images.

VISIONMAP A3

Another method to obtain oblique views is by sweeping one or more cameras across track. The scan motion allows a large field of view across the flight direction and provides oblique views. VisionMap's A3 dual-camera system, introduced in 2008, operates according to this sweeping principle. The two 300mm lenses rotate at a 90 degree angle with the flight direction (see Figure 4) and provide a field of view (FOV) of up to 106 degrees. A single frame covers 7,812 x 2,666 pixels. Each pixel has a size of 9 micron with a radiometric resolution of 12 bit. Up to 29 double frames can be captured in a single sweep resulting in a total frame size of 62,500 by 7,850 pixels. The centre part of the total frame – up to an FOV of 40 degrees – is suited for orthoimage generation. The single frames captured outside this FOV range, i.e. the frames towards the end of the sweep, are de facto oblique images. The typical flying height varies from 3,000 to 10,000 metres. The camera including computer weights 38kg and fits within a box measuring 60 x 60 x 50 square centimetres.
The vertical and oblique images are processed fully automatically including block adjustment, generation of orthoimages and creation of digital elevation models (DEMs). The key to VisionMap's approach is threefold: high yield of aerial surveys; vertical and oblique images in one flight by one camera system; and fully automatic production of orthoimagery. Five years after the launch of the A3, the A3 Edge has been introduced on the market. The system has been designed to increase the area captured per hour at higher spatial resolution (Figure 5). The total image frame of the A3 Edge covers 78,000 x 9,600 pixels; each pixel has a size of 7.4 micron with a radiometric resolution of 12 bit. The maximum across-track FOV is 109 degrees. At a flying height of 4,250m, the ground sample distance (GSD) is 10cm. Figure 6 compares productivity of digital aerial cameras in terms of square kilometres captured per hour as a function of GSD.

WEHRLI

The five oblique camera systems from Wehrli/GeoSystem, a company based in New York, USA, and specialised in digital aerial cameras and high-end photo scanners, are designed around the nadir-looking 1-DAS-1, an RGB medium-format (12kg) push-broom camera initially developed to operate along with an airborne Lidar scanner. Red, green and blue are simultaneously recorded by separate line sensors mounted in the same focal plane. The linear array sensors consist of 8,023 pixels, each measuring 9 micron and with a radiometric resolution of 14 bit. When flying at a height of 1,000m the GSD of the nadir-looking camera is 10cm. The first oblique camera developed by the firm was the 3-DAS-1, which consists of 3 cameras all contained in a single housing. Separate lenses are used for each view: one looks nadir, one forward at a tilt angle of 26 degrees, and one backward at a tilt angle of 16 degrees. All camera heads, whether looking nadir or oblique, have a focal length of 110mm. The 3-DAS-2 is, as the name suggests, a doubling of the 3-DAS-1, with two cameras looking nadir, two forward and two backward. The focal length of each camera is 80mm. Of course, the doubling results in a heavier system weighing 68kg, while the 3-DAS-1 weighs 59kg. The 4-DAS-1 has the same features as 3-DAS-1 but has been extended by a nadir-looking near-infrared (NIR) camera while the focal length of all cameras is 80mm. The 3-OC-1 is a 3 camera system. Its main difference with the 3-DAS-1 is that the inclination angle of both the forward and the backward-looking cameras is 45 degrees, while the

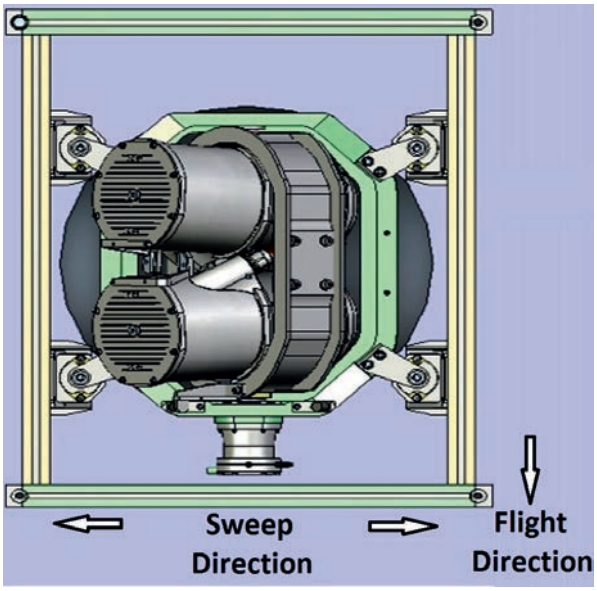

▲ *Figure 4, Diagram of VisionMap's sweeping A3 dual-camera system showing its working principle.*



▲ *Figure 5, A view of the casing of the A3 Edge sweeping camera system.*

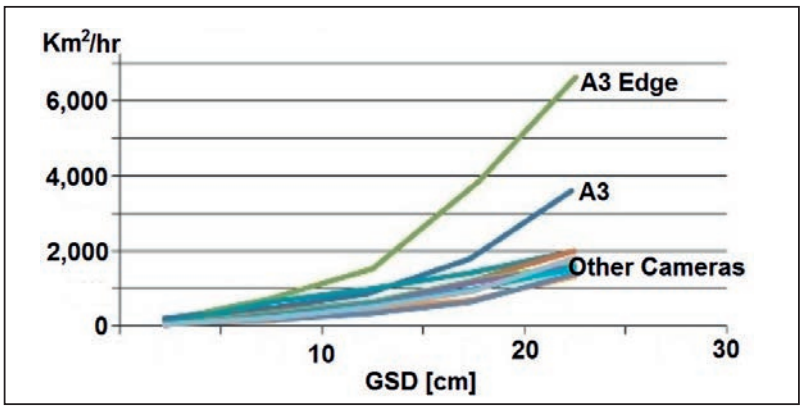

◀ *Figure 6, Comparison of productivity measured in square kilometres per hour of A3, A3 Edge and other digital aerial cameras as a function of GSD (courtesy: VisionMap; modified).*



▲ *Figure 7, A view of the casing (left) and lens system of the Wehrli 6-DAS-1 oblique camera system.*

focal length of the nadir camera is 80mm instead of 110mm. The fifth oblique system, the 6-DAS-1 (see Figure 7), actually combines the 4-DAS-1 and 3-OC-1 in one system. There are two nadir-looking cameras: one is for RGB and the other captures the near-infrared band. The inclination of one forward-looking camera is 26 degrees, just as for the 4-DAS-1, and the other looks at an angle of 45 degrees, just as the 3-OC-1 does. One backward-looking camera has a tilt angle of 45 degrees and the other of 16 degrees. The 6-DAS-1 is scheduled for launch in spring 2014.

The use and value of oblique cameras is fully intertwined with sophisticated photogrammetric software

CONCLUDING REMARKS

Extracting accurate geometry from aerial images on a production scale has for a long time been limited to vertical images. Today's sensors can be calibrated accurately, georeferencing can be done through GNSS/IMU alone while modern computers and software can swiftly conduct the complex calculations needed for the extraction of real-world coordinates from imagery, thus allowing fully automated bundle block adjustment and generation of orthoimages and DEMs from oblique imagery. Indeed, the use and value of oblique camera systems is fully intertwined with today's sophisticated photogrammetric software.

ACKNOWLEDGEMENTS

Thanks are due to all mentioned manufacturers of oblique digital aerial cameras for their feedback on the final draft. ◀

