MSc. Integrated Product Design
Faculty of Industrial Design Engineering
Delft University of Technology

DESIGNING A ROBOT ASSISTANT FOR PROFESSIONAL PAINTERS THROUGH USER-CENTERED DESIGN

Fleur Jansen



Stichting Uitvoeringsregelingen SAG
Schilders-, Afwerkings- & Glaszetbedrijf

Designing a Robot Assistant for Professional Painters through User-Centered Design

Master's thesis
MSc. Integrated Product Design
Faculty of Industrial Design Engineering
Delft University of Technology

16-05-2025
Fleur Jansen
4847776

Chair
Dr. Jordan H. Boyle

Mentor
Dr. Ing. Marco C. Rozendaal

TU Delft

Stichting Uitvoeringsregelingen SAG
Schilders-, Afwerkings- & Glaszetbedrijf

PREFACE

Before reading this report, it's helpful to know that the project builds on earlier work. A contextual study was first carried out by the design agency Muzus. Based on their findings, several robotic concepts were developed during the master's course Advanced Concept Design at the Faculty of Industrial Design Engineering. This research continues from one of those ideas, the Robot Cart (Hoogendijk, 2024). The signed project brief can be found in Appendix A.

I would like to thank my supervisors, Jordan Boyle and Marco Rozendaal, for their support, guidance and positive but critical attitude throughout the entire project. Coming into this with limited knowledge about robotics and human-robot interaction, I've learned a lot over the past months. I'm also grateful to the team at the Human-Robot Interaction Lab for their helpful feedback and for introducing me to the world of robotics and the role designers can play in it. Thank you Tom Dalhuisen from Dalco Robotics for lending me the Dalco Drive to make my prototype come alive, and thank you Enne Lampe for assisting with the co-creation session.

I want to show my gratitude to design agency Spark design & innovation, with Hugo Honijk as my contact person. As an experienced design agency that excels in designing robotic products, Spark provided advice that helped elevate the quality of the design. I was given the opportunity to organise workshops at their office to generate and iterate on ideas, receive feedback, and get valuable tips for building the prototype. Their advice helped me take the final steps toward a more realistic final design.

I would also like to thank Marian Verhaar, Esmee Schrama, Koen van Domselaar, and Mark Hulsen from OnderhoudNL. Their feedback during the in-between evaluations, as well as their insights into various painting contexts, environments, and regulations, were all very helpful to my design process. Thank you for connecting me with the painting companies.

Most importantly, thank you to all the participants who took part in this research. Your time, input, and openness made this research possible. I'd like to give a special thanks to Perry Rietveld from elk® for arranging the interviews, co-creation session, and evaluations. Thank you to Joris Logies from Bilfinger for organising the site visit and interviews in the industrial setting, and to Amy Oerlemans from Kloet for setting up a site visit and interview as well.

Fleur Jansen
Delft, 2025



ABSTRACT

This report presents the design of a robotic assistant aimed at supporting professional painters by reducing physical strain and improving efficiency on the job. The three main design goals were to define the robot's desired functionalities, design an intuitive user interaction, and create a physical embodiment that aligns with the aesthetic preferences of painters.

The painting profession poses significant physical and ergonomic challenges. Painters often carry heavy materials, work in awkward positions, and perform repetitive motions, leading to long-term health problems and dropouts. As a result, the field struggles to attract younger workers, making it necessary to introduce an innovation to reduce the physical workload.

A user-centered design approach was applied to develop an ideal robotic assistant tailored to the needs of painters. By involving painters throughout each phase of the project, the design process ensured the solution closely aligned with their expectations and increased the likelihood of user acceptance. This research explored how a robotic cart could help reduce physical workload, encourage better ergonomic practices, and improve overall efficiency on the job. It also addressed broader challenges in the painting profession, such as weather-dependent task planning and communication within multilingual teams.

Painters from both industrial and residential contexts were involved in the entire design process through interviews, site visits, co-creation sessions, and user evaluations. The project explored various functionalities and forms of the robot, and iteratively developed a concept based on user feedback. Prototypes, sketches, models and other visual tools were used to generate and evaluate ideas.

Early on in the process, interviews revealed that while painters are resistant to robots performing painting tasks, they are open to a supportive robotic assistant. One that stays close by, carries and organises their tools and materials, measures temperature and humidity level and gives weather advice to improve planning their tasks, charges batteries for their electronic devices, lights up the workspace, and helps with communication. The robot should be robust, sleek, easy to use, and visibly present to avoid accidents. Painters wanted to control the behaviour of the robot through simple operating modes like “follow,” “work,” and “park.”. To accommodate different user preferences, the robot can be operated using voice commands or an interactive screen.

The project serves as a solid foundation for a feasible, accepted robotic solution for professional painers. Future work should focus on technical development, interface testing, manufacturability, and business feasibility to move the product toward real-world implementation.

CONTENT

1. Introduction **8**

2. Project Brief **9**
2.1 Stakeholders 9
2.2 Design goals 12
2.3 Assignment 14

3. Background Research **15**
3.1 Materials of painter 15
3.2 Painter activities 16
3.3 Work structure 17
3.4 Health and safety hazards 20
3.5 Human-Robot Interaction 23
3.6 Benchmarking 28

4. Context Analysis **32**
4.1 Method 33
4.2 Interview Insights 37
4.3 Scope 51

5. Design Vision **53**
5.1 Design Vision 53
5.2 Design Requirements 54

6. Ideation and Concepts **57**
6.1 Methods 57
6.2 Clustering the ideas 65
6.3 Concepts 69
6.4 Concept evaluation 76

7. Concept detailing **92**
7.1 Design direction 92
7.2 Prototype 98
7.3 Co-creation session 112
7.4 Design improvements 133
7.5 Interaction 139
7.6 Aesthetics 154

8. Final design **174**

9. Discussion **195**
9.1 Reflection user-centered design approach 195
9.2 Contributions 198

10. Conclusion and recommendations **199**
10.1 Recommendations for future work 201

References **203**

Appendices **208**
Appendix A. Approved project brief 208
Appendix B. Robot cart 214
Appendix C. CAO 217
Appendix D. CAO roles 222
Appendix E. Research Ethics 228
Appendix F. Insights Muzus 246
Appendix G. Interview structure contextual analysis 249
Appendix H. Concept evaluation structure 251
Appendix I. Transcript residential context company A 252
Appendix J. Transcript residential context company B 260
Appendix K. Transcript Industrial context company C 268
Appendix L. Initial Robot functionality cards 278
Appendix M. Current tools 285
Appendix N. Creative facilitation results 290
Appendix O. AI-generated images 303

Appendix P. Ideation 309
Appendix Q. Exploration design direction 316
Appendix R. Co-creation: briefing 332
Appendix S. Transcript Co-creation session 334
Appendix T. Preparations Interaction evaluation 347
Appendix U. Transcript Interaction evaluation 351
Appendix V. Preparations Aesthetic evaluation 355
Appendix W. Transcript Aesthetics evaluation 359
Appendix X. Exploration final design 362
Appendix Y. Cost estimation 371



01 INTRODUCTION

Professional painting is a physically demanding job. Many painters face health issues due to the physical demands of their work. While it is the painters' responsibility to look after their health, the physical strain of the job often takes a toll, and many painters do not continue working until retirement age. In addition, the work is becoming less attractive to young painters, who have a lower tolerance for physically demanding tasks compared to the older generation.

This graduation project focuses on designing a robot assistant that supports professional painters with physically intensive tasks. The goal is to improve their health, safety, and comfort at work. Rather than replacing painters, the robot aims to assist them by lightening the workload, reducing the risk of injury, and helping to extend career longevity. It also preserves the craftsmanship while improving working conditions and efficiency.

The main focus of the project is to design the robot's functionalities, interaction, and physical embodiment. As a starting point for the research, the report introduces the client and key stakeholders in Chapter 2. Chapter 3 presents the findings from a literature study that explores the work, tools, and challenges of professional painters. It also introduces the definition of robots, the different types that exist, and their current roles in work environments.

Chapter 4 summarises the contextual insights gathered from multiple interviews with painters and other relevant professionals. Based on these insights, a design vision is formulated in Chapter 5 and a list of requirements is defined. From the findings from the contextual analysis, ideas are generated and concepts are developed. These early ideas are transformed into seven concept, which is explained in Chapter 6. These seven concepts are then evaluated together with painters to determine which functionalities are desired for their ideal robot assistant. These most valued functionalities are combined into one design direction in Chapter 7, which is then developed into a full-scaled (1:1) prototype. This prototype is evaluated again with users in their context in a co-creation session to gather feedback on functionality and interaction. The chapter also explains the user evaluations regarding interaction and aesthetics, to align with user preferences.

Chapter 8 presents the final design of the robot assistant for painters. This is followed by Chapter 9, which reflects and describes the final outcomes of the project. Chapter 10 gives recommendations which steps should be taken before the robot can be introduced in the painting context. The report concludes with key contributors to help other designers learn from this project.

02 PROJECT BRIEF

Previous research has proved the need to improve the working conditions of professional painters (Muzus, 2024). This graduation project builds on those insights and takes the next step toward designing the ideal robot assistant for professional painters using a user-centered design approach.

This chapter begins by introducing the key stakeholders involved and their values (Chapter 2.1). While earlier studies have explored the challenges painters face and potential directions for improvement (Hoogendijk, 2024), this project adds a new perspective through further exploration and design. Chapter 2.2 describes the starting point and the design opportunities that were identified. From these, three design goals and an the initial assignment were formulated (Chapter 2.3), shaping the direction for this project.

2.1 STAKEHOLDERS

The stakeholders for this research are visualised in Figure 1. Stakeholders are individuals or groups with an interest in or affected by the project's outcomes. Primary stakeholders are directly involved and impacted (second ring). Secondary stakeholders are indirectly affected (outer ring). (Indeed, 2025)

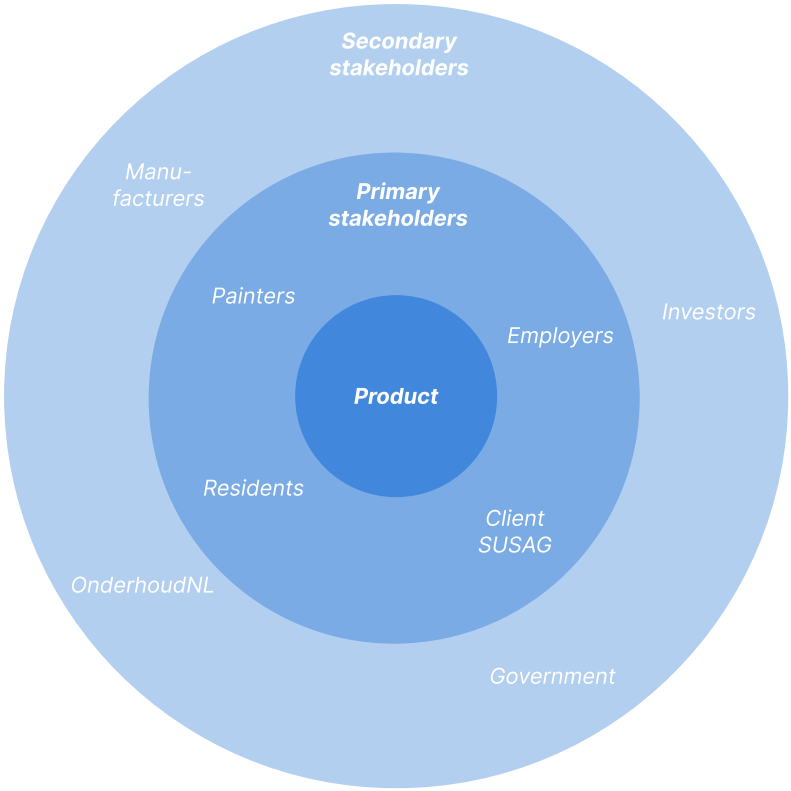

Figure 1. Stakeholder diagram with primary and secondary stakeholders (Muzus, 2024) (Hoogendijk, 2024)

2.1.1 Primary stakeholders

The main stakeholders in this project are professional painters, the employers of the painters, residents, like tenants or home-owners, and the client SUSAG.

Painters

Painters are the professionals responsible for carrying out the painting work. In this research, they are the end-users, and the proposed robotic solution aims to support them in their work environment.

Hoogendijk's research (2024) showed how the professional painters value quality and don't pay attention to their own health to get the high-quality results. The painters value the quality of their work over everything, followed by speed. From the interviews performed by Muzus, it was clear that painters are proud workers and appreciate recognition of their work.

Painters want a solution that is easy to use, that will support them with physically demanding tasks and maintaining the right posture. According to Muzus, painters want to maintain control over the painting process, and prefer technology complementing their work rather than replacing it. They would not trust robots as the main executor of the painting work (Muzus, 2024a).

Employers

Employers are responsible for managing painting requests, overseeing painters, and ensuring the overall quality of the work.

Due to the high demand for painting services, the employers must make a trade-off between quality and speed, where often quality is reduced (Muzus, 2024). This clashes with the quality priority of the painters. Employers care for a solution that is profitable and worth investing in. Besides valuing productivity, efficiency, costs, and profitability, employers also value the safety of their workers. If workers get injured and are unable to work, it costs the company money and can lead to delays in the job.

Residents

The residents are the individuals living in the homes that undergo maintenance work by the painters. Painters often contact the residents for answering questions or requests.

Examples of residents are tenants and home-owners. Both home-owners and tenants find it important that work is delivered with quality.

Tenants, who rent their homes, normally have little control over maintenance decisions, as this is often managed by the municipality. Tenants want the work to be finished quickly, and they value speed and non-intrusiveness. Home-owners often requested the painting work themselves, and therefore also value speed and costs.

The client SUSAG

Stichting Uitvoeringsregelingen SAVG (SUSAG) is an organisation that supports employers and employees in the painting, finishing, property maintenance, and glazing industries. Their focus areas are sustainable employability, compliance with collective labor agreements (CAO), collective accident insurance, and organisational leave. SUSAG is the official client of this research (Stichting Uitvoeringsregelingen SAG, 2024). They mainly care that the robotic solution improves the safety and health of painters.

2.1.2 Secondary stakeholders

The secondary stakeholders in this project are the manufacturers of the robot, the investors, the government and OnderhoudNL.

Manufacturers

For manufacturers, it is important to think about the feasibility of the robot's design. For feasibility, the used technologies, materials, components, and production processes are readily available and cost-effective. While feasibility is important, scalability is also important to manufacturers, if the robot will be produced for a large market. If the robot is too complex or expensive to produce, it may not be a viable product in the long run.

Investors

For investors, the robot needs to be both profitable and scalable. Investors are interested in whether the robot can be brought to market successfully and generate a return on their investment. This means there is a large potential market for the product, and the product is scalable to meet the demands of the market.

Government

The government is involved because they set and enforce the safety regulations that painters must follow. These regulations are in place to protect workers from hazardous conditions. The product must be in line with the safety regulations.

OnderhoudNL

OnderhoudNL plays an important role in the painting industry as they are involved in the education and training of painters. They also provide warranties if the work is not done correctly (Hoogendijk, 2024), which means they value quality as well.

2.2 DESIGN GOALS

As a starting point for this graduation project, the Robot Cart concept developed by Fabian Hoogendijk (Hoogendijk, 2024) is being used. This concept was selected by the client, SUSAG, as one of the most promising outcomes of the Advanced Concept Design course. In addition to Hoogendijk's work, the insights from Muzus' report are used to inform the direction of the research (Muzus, 2024).

2.2.1 Starting point: Robot Cart

Robot Cart (Figure 2) is a robot assistant that follows around the painter and can lift paint with an hydraulic piston, heat and cool paint, power electric tools, keep brushes wet, and carry a step ladder.

From his report, useful information was found to support this design process. The detailed analysis on Robot Cart can be found in Appendix B. First of all, he came up with the concept of a robot cart assisting with the work. Muzus' research confirmed the robot's potential that the robot cart would improve health, enhance craftsmanship with its supporting function and the painter being in control, and embraces uncertainty by maintaining paint temperature. With an ergonomic experiment Hoogendijk found the ideal height for the worktop when painting on their knees, standing and using stairs. For sitting, this is 25-41 cm, for standing it is 90-102 cm and when standing on stairs, it is 160-171 cm.

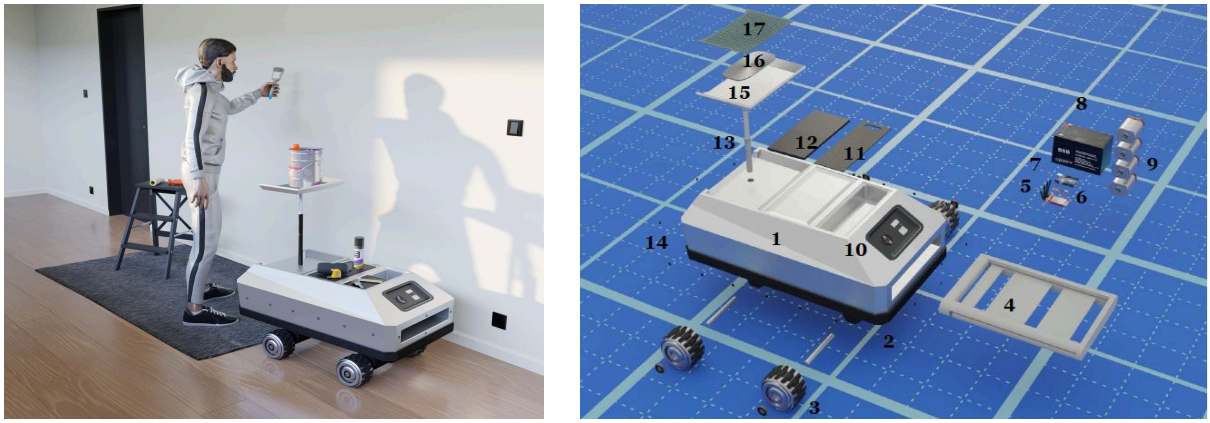

Figure 2. Robot cart and its components (Hoogendijk, 2024)

2.2.2 Design opportunities

An analysis of the Robot Cart revealed several design opportunities that form the foundation for this graduation project. The Robot Cart can store a stepladder, some smaller tools, and one or two paint buckets. However, there is potential for the Robot Cart to offer even more value and further enhance working conditions. To achieve this, information will be gathered about the wide range of tools painters use in their workspace, which tools are the most

challenging to work with, how much equipment they typically need to carry to the worksite each day, and what other challenges they encounter in their work environment. To collect these insights, multiple interviews and context visits will be planned with painters from various painting companies. Based on this information, ideation will be carried out to generate new ideas and functionalities that can add greater value to the Robot Cart.

In addition to exploring new functionalities, it is important to know how painters would like to interact with the robot. This is an aspect that has not been addressed in Hoogendijk's research. Further field research and user evaluations will be conducted to better align the design with user needs. Finally, the embodiment of the robot will change together with the new functionalities and desired interaction, so there are possibilities to design and evaluate the embodiment of the robot to align it with painters aesthetic preferences.

2.2.3 Design goals

The aim of this project is to design a robotic solution that supports professional painters in physically demanding tasks, enhancing their safety and overall health. The design goals for this robotic solution is to design the desired functionalities, interaction and embodiment (Figure 3).

The desired functionalities will be identified through interviews and user studies with professional painters. Based on these insights, prototypes will be developed and tested to evaluate their technical feasibility. The interaction between the painter and the robot will be explored through further studies in which participants interact with the developed prototype. The embodiment of the robot will be informed by the painters' aesthetic preferences. This ensures the design fits within their work context and aligns with their expectations. By involving painters in each phase of the design process, the robotic solution will be in line with the traditional craftsmanship. The robotic solution aims to improve efficiency without compromising quality, while prioritising the safety and well-being of painters and making the profession more attractive to future generations.

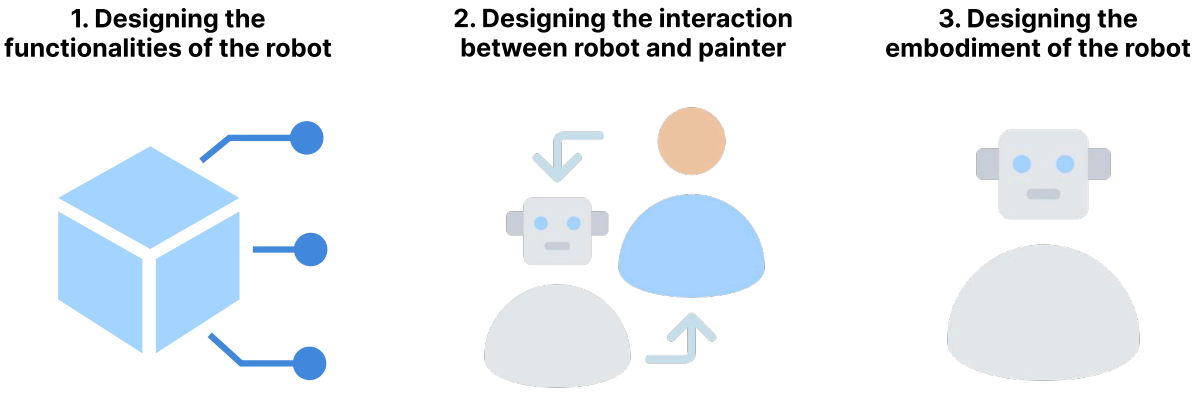

Figure 3. The three main design goals

2.3 ASSIGNMENT

Based on the design goals stated in the Chapter 2.2.3, the assignment was formulated as follows:

"Design a robot that enhances the safety and health of professional painters by supporting them with physically demanding tasks. Design the desired functionalities, interaction and embodiment of the robot for it to be accepted into their traditional craftsmanship culture."

Personal take-aways project brief

When looking at the different stakeholders and their values, I noticed the current dilemma where painters value quality and their bosses value speed because of the high-demand. This highlighted the importance of improving efficiency, while maintaining quality.

Previous research, like Muzus' report, provided some guidance in the challenges of painters and showed the characteristics of the painters. Hoogendijk's project also offered a great starting point of the project, and highlighted desired functionalities from the painters. By analysing Robot Cart, it helped me determining my design goals for this project and formulate the assignment.

03 BACKGROUND RESEARCH

To be able to design a robot that can effectively support a painter in the workspace, it is important to understand the users; the professional painters. Learning about the activities painters do, understanding the different roles and their responsibilities, and the safety risks in their work environment will help to understand them and prepare for the interviews that will be conducted later in the project.

This chapter summarises the main insights gathered from desktop and literature research. Chapter 3.1 and 3.2 explain more about the materials and activities of the painters. Chapter 3.3 explains the work structure and relevant roles and responsibilities. Chapter 3.4 illustrates the health and safety hazards of the painting profession.

At the same time, it's also important to learn about robots, since the goal is to design one. Chapter 3.5 provides background information on what robots are, the different types that exist, what human-robot interaction means, and how robots are currently used in other work environments. Finally, Chapter 3.6 presents a benchmarking study to compare some existing robots, with their use-case, capabilities and components.

3.1 MATERIALS OF A PAINTER



Figure 4. Materials of a painter (Richtsmeier, 2025)

Painters bring many materials and tools to the job site. This includes support structures like (step)ladders and scaffolding, paint buckets, painting rollers and brushes, tools, a vacuum cleaner, and many other things shown in Figure 4 (Richtsmeier, 2025). For each painting job, painters must complete multiple tasks, and for each task, different materials and tools are needed. Chapter 3.2 organises the main activities into six categories with the corresponding tasks.

3.2 PAINTER ACTIVITIES

Painting itself is only one small part of the entire painting profession. Figure 5 shows the different categories and the tasks involved in each. Before painting, the painter must protect the job site by moving or covering furniture and other obstacles. They also need to bring tools and materials to the site and set up any necessary support structures.

Once everything is prepared, they need to make the surface ready for painting by repairing, sanding, and cleaning it. After the painting is finished, the painter must clean up the tools and materials. Communication with colleagues or tenants is also an important part of the job. (Toelkes, 2023)



Figure 5. Painter activities (Toelkes, 2023)

Besides the painting activities on the job site, there are also other activities that come into play with the painting profession. These other activities might include making a plan of attack, estimating the materials and time needed for the project, ordering materials, transporting them to and from the job site, and loading and unloading the van. During the interviews, understanding these tasks helps to talk about how the robot could support the painter for certain activities.

During the interviews, more activities and challenges can be identified. In Chapter 4.3, these main activities are combined with the contextual insights gathered from observations and interviews with painters, translating them into a user journey of a painter.

3.3 WORK STRUCTURE

Painters fall under the SAVG labour agreement (Painting, finishing, property maintenance and glazing companies). There are 36 official roles within this agreement. For this project, not all 36 roles are relevant. This section highlights the most relevant roles and their responsibilities. Most of these roles will come back in the context analysis (Chapter 4). The most important roles are:

- (Allround) painters: Execute painting tasks.
- Foreman (often senior painter): Responsible for managing the team on site.
- Project leader: Manages and overviews multiple projects at once.
- Executor: Responsible for the work to be executed in a good and safe way.
- Calculator: Responsible for estimating the time and materials needed for a project.

Chapters 3.3.1 to 3.3.5 describe the responsibilities of each of these roles. The role descriptions and responsibilities are based on the official labour agreement (CAO-Partijen SAG, 2025), which is included in Appendix D.

3.3.1 (All round) painters

The painters execute the work. The younger and less experienced painters are guided by more experienced painters or the team leader (Muzus, 2024).

Main responsibilities:

- Prepare surfaces
- Select and mix paints
- Paint surfaces
- Follow project specifications and client preferences
- Maintain clean work area
- Quality control
- Estimate time and materials required for projects
- Customer service
- Maintain tools and equipment
- Dispose of paint and materials
- Collaborate with project managers and clients
- Communicate with team members

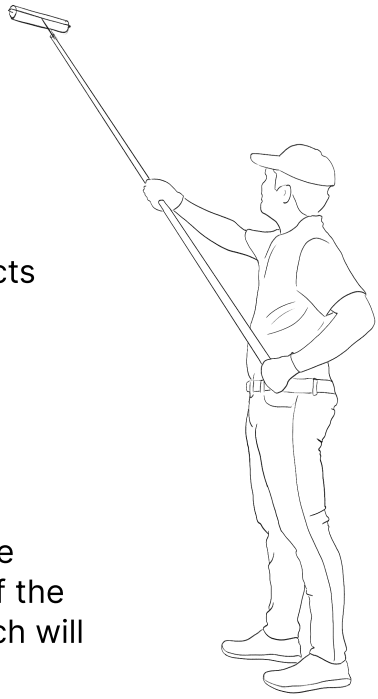

Throughout this research, more information will be found about the responsibilities and challenges of the painters. The findings from the contextual research will be explained in Chapter 4.

3.3.2 Foreman

In larger teams, there is a team leader responsible for the overall project. This role is called the foreman. The foreman instructs and manages their team.

Main responsibilities:

- Overseeing all aspects of painting projects; planning, preparations, quality control, budget.
- Responsible for managing teams; all painters follow safety protocol, hands-on support, guidance.
- Responsible for equipment and materials
- Painting activities
- Communication with clients
- Train and mentor junior painters
- Resolve problems
- Documenting; Maintaining records of work performed, materials used, issues that arise

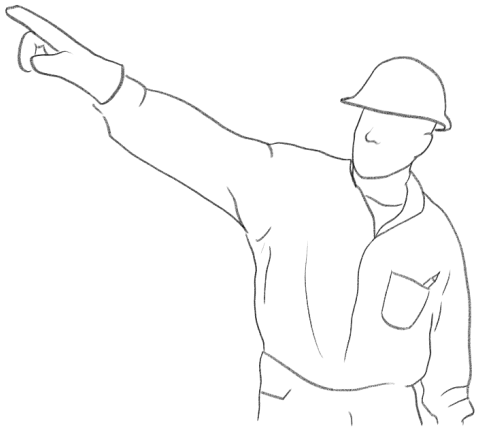

3.3.3 Project leader

The project leader manages multiple projects at once. They do administrative work and they care about health and safety regulations. Because they run multiple projects at once, they are not always around on the job site.

Main responsibilities:

- Oversee all stages of the project
- Planning and budget
- Project plans
- Main contact with clients
- Lead project teams, manage resources, and guide work processes.
- Ensure quality, timely completion, and cost control of the project.
- Identify and manage project risks and deviations.
- Monitor staff performance and provide guidance for their development.

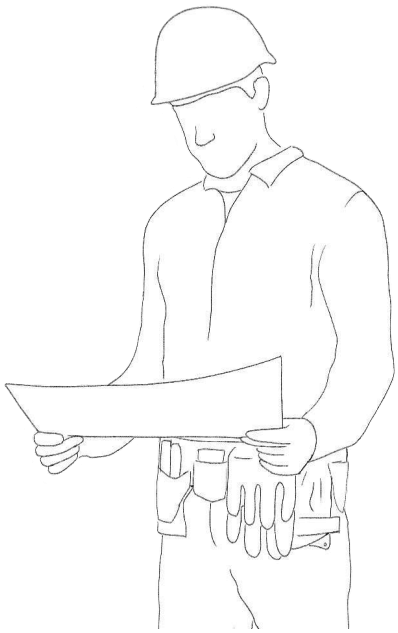

3.3.4 Executor

The executor is responsible that the work is performed in a good and safe way. They are also responsible for getting the work permits approved.

Main responsibilities:

- Manage execution of tasks
- Plan and organise work tasks
- Get work permits approved
- Work instructions
- Monitor progress and quality
- Ensure safety regulations are followed



A project leader manages the overall project, while an executor handles the day-to-day tasks and ensures good and safe execution.

3.3.5 Calculator

The calculator is responsible for estimating the time and materials needed for a project.

Main responsibilities:

- Assess project scope and building condition
- Estimate labor, material, and equipment costs
- Create cost breakdowns

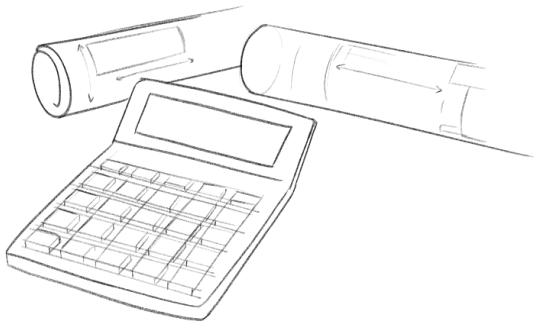

3.4 HEALTH AND SAFETY HAZARDS

Professional painting is a physically demanding job where most painters do not work until retirement age because of their sustained injuries. The hazards painters might encounter, are categorised in three categories: the health and safety hazards into ergonomic hazards, like working with arms above shoulder height, working in awkward angles and lifting heavy materials, physical hazards, like falling of a ladder or scaffolding, and chemical hazards, like working with toxic gasses and dust (Figure 6).

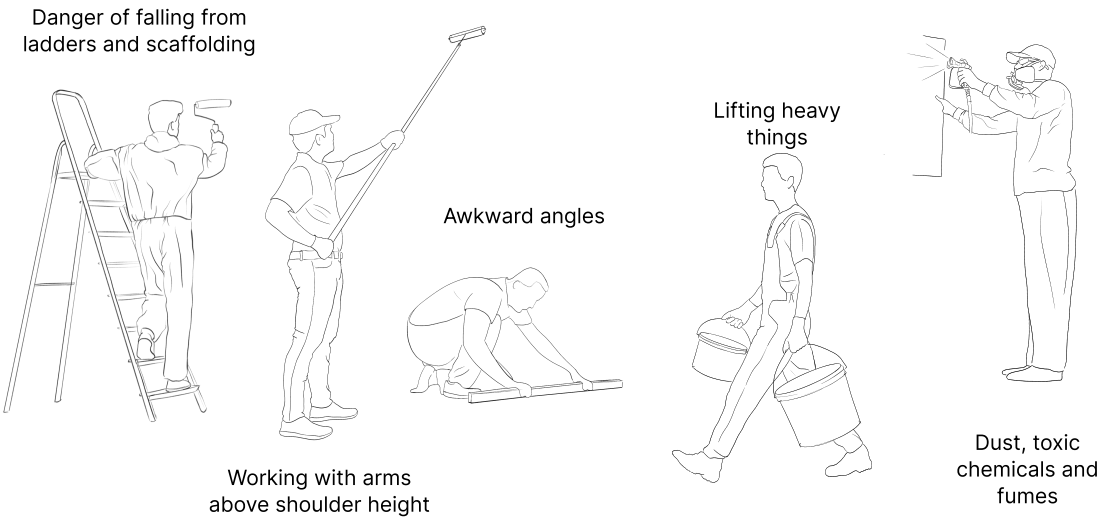

Figure 6. Health and safety hazards of painters

3.3.1 Ergonomic hazards

A study by Bergsten assessed the ergonomic risk of painters during sanding, painting and scraping. From the study it was concluded that especially working on the ceiling puts a high physical strain on the neck due to the prolonged backwards bending. According to another study, the risk of shoulder injuries is increased when working with arms above shoulder height (Van Rijn et al., 2010). Wrist injuries are also common when the wrists are bent in extreme positions or when frequent movements are required (Bergsten, 2021).

Previous research by the TU Delft showed that limited space increases the chance of ergonomically inappropriate actions by painters (Rehber et al., 2023). A study by Antwi-Afari et al in 2017 concluded that increased lifting weights, increased muscle activity and muscle fatigue during repetitive lifting tasks may elevate the risk of developing work-related musculoskeletal disorders (WMSDs).

"You shouldn't become a painter if you're not willing to have some knee problems. I know very few painters who work until retirement."

(Muzus, 2024)

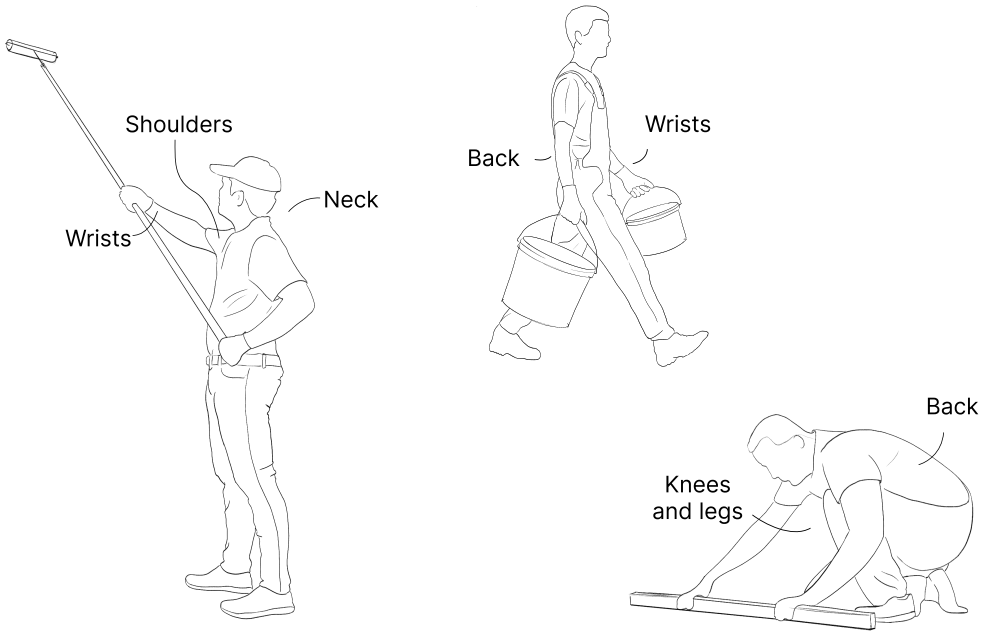

Figure 7. There is a high chance of sustaining injuries in the painting profession

3.3.2 Physical and environmental hazards

Painters also face several physical hazards. When working on a ladder or scaffolding there is a risk of falling, there is a risk of objects falling on them, and there is a risk of slipping, tripping, and falling while painting. There is also a chance that painters can sustain injuries because of malfunctioning tools.

When working outside, extreme weather conditions can also cause concerns, like extreme heat and radiation from the sun or hypothermia during cold weather. (Umor et al., 2021)



Figure 8. Physical hazards in the painting profession include falling of the ladder, tripping and slipping

3.3.3 Physical and environmental hazards

Painters are especially at risk because they are frequently exposed to harmful materials like paint products, solvents, lead, asbestos, and other toxic substances during their work. Paint contains a wide range of chemicals, such as volatile solvents, heavy metals (like lead and chromium), and other compounds that provide colour and texture (Bentley & Turner, 1998).



Figure 9. Exposure to the harmful chemicals can have serious impact on the health of a painter

While mixing paint or applying paint, these chemicals can enter the painter's body, especially without proper protective equipment, causing severe health issues. These include respiratory diseases, skin conditions, allergies, neurological and reproductive disorders, cancers, and other serious illnesses (Koge-Vinas et al., 2003). Prolonged exposure to these substances can significantly shorten life expectancy (Umor et al., 2021).

3.3.4 Focus of research

This research focuses on improving the ergonomic and physical hazards in the painting profession. Finding a solution for chemical hazards falls outside the scope of this project. While several studies mention the physical workload and the ergonomic and physical risks involved in painting, these findings still need to be confirmed through interviews with painters. The insights from these interviews will be summarised in Chapter 4.

The goal of the interviews is also to identify any additional challenges painters face. These identified challenges will serve as the foundation for designing the desired functionalities of the robot.

3.5 HUMAN-ROBOT INTERACTION

To be able to design a robot or to understand the design process of one, it is important to understand the terminology around robotics. This chapter explains the definition of a robot, what human-robot interaction means, what types of robots there are and how current robots collaborate with humans in the workspace (Chapters 3.5.1 to 3.5.3). The methodology Human-Centered Design (HCD) that is used for this project is described in Chapter 3.5.5.

3.5.1 What is a robot?

That question might seem simple, but in the world of robotics, there is no single universally accepted definition. Different organisations and sources have different perspectives, emphasising different aspects of what makes a system a robot.

According to the international Organization for Standardization (ISO) a robot is defined as "a programmed actuated mechanism with a degree of autonomy to perform locomotion, manipulation or positioning" (IFR, n.d.-a). The International Federation of Robotics (IFR) describes a mobile robot as a "robot able to travel under its own control" (IFR, n.d.-a). Besides autonomous operation, a mobile robot can have possibilities to be remote controlled.

Some definitions can also be contradicting. According to Van Dale, robots are a set of tools and machines resembling a human being (Van Dale Nederland, n.d.). Britannica Dictionary defines robots as “any automatically operated machine that replaces human effort, though it may not resemble human beings in appearance or perform functions in a humanlike manner." (Moravec & Peter, 2025). Some definitions emphasise human-like form or behaviour, while others focus on autonomy and the ability to sense and act in the world.

Another study established a definition that finds common ground between designers, engineers and practitioners. They describe robots as “physical, mechanical and artificial agents that can sense the world, the environment, other agents, and object; reason to make actionable decisions through the development of plans; change their behavior based on their sensing and reasoning (and vice versa); and interact with the physical world, the environment, other agents, and objects to purposefully perform actions”.

The definition of a robot for this project can be synthesised from these views. For this research, a robot is defined as:

A (semi-)autonomous physically embodied system capable of perceiving its environment, adapting its behaviour based on that input, and interacting purposefully with its surroundings.

3.5.2 Human-Robot Interaction & User Experience

Human-Robot Interaction (HRI) is the interdisciplinary field that studies how people interact with robots. The goal of HRI research is to understand, design and evaluate communication and collaboration between humans and robots (Murphy et al., 2010).

Key concepts in HRI include:

- Autonomy: how independently the robot can operate. From fully remote-controlled to fully autonomous or a shared control setup.
- Interaction modes: including physical (touch or coordinated movement), verbal (spoken commands), non-verbal (gestures, signals), or multimodal combinations.
- Human factors: such as trust, usability, and user acceptance.

User experience refers to the overall perception and emotional response a person has when interacting with a robot, including how intuitive, comfortable, and effective the interaction feels. This means that beyond performing tasks, robots should be designed to interact in ways that align with users' expectations, needs, and work habits (Prati et al., 2021). A well-designed user experience contributes significantly to the robot's acceptance and usefulness in real-world settings (Bartneck et al., 2020).

3.5.3 Robot types and real world applications

Robots are everywhere. They are being used in hospitals, industry, security and even in our homes. Robots can be classified into different robot types. Industrial robots are one of the most well known robots. An industrial robot is defined as an automatically controlled, reprogrammable multipurpose manipulator for use in automation applications in an industrial environment (IFR, n.d.-b). The demand for industry robots is growing day by day (Singh & Banga, 2022). There are different types of industrial robots, like articulated robots, cobots and mobile robots.

Articulated robots, or robotic arms, are one of the most common industry robots. They are often used in manufacturing settings and used for precision work, like welding and assembling, and carrying heavy loads. An example robot is the M-900 robot by FANUC (Figure 10), which has a payload capacity of 700 kg (FANUC, n.d.).



Figure 10. Articulate robotics. Photo: FANUC

Collaborative robots, or cobots, is a robot type designed for direct physical interaction with human workers. Cobots, also typically articulated robots, have extra features that allows them to collaborate with human workers. Cobots are intended to work together with a person and share the payload of the work. Rather than replacing humans, they complement them by combining the robot's computational precision and strength with the human's sensing and dexterity (Peshkin & Colgate, 1999). An example of a cobot robot is YuMi (Figure 11), which is used in a manufacturing environment where robots and humans work side by side (ABB, n.d.).



Figure 11. YuMi single arm. Photo: ABB

Besides robots working in the industrial context, there are many other applications that aim to improve working conditions of real-world jobs.

Service robots are robots in professional use that perform useful tasks for humans outside the industrial setting (IFR, n.d.-c). Delivery robots, cleaning robots, healthcare robots, and defence robots are all examples of service robots. Service robots can be both fully autonomous without active human intervention, and semi-autonomous, which requires human input. One well known domestic robot that is fully autonomous is Roomba (iRobot, n.d.), which can vacuum and mop floors.

An example of a service bot that is partially autonomous is Keenon T8 (Figure 12), a serving robot used in the hospitality context (Innoway Robotics, n.d.). The robot requires input from the human workers to determine its destination by using a call-button. The robot then determines the route to that destination on its own.



Figure 12. Keenon T8; a service cobot in the hospitality context. Photo: Innoway Robotics

Another relevant example of a service cobot is SAM (Semi-Automated Mason, Figure 13), a bricklaying robot used in construction projects (Construction Robotics, 2017). SAM can lay bricks much faster than a human mason. However, SAM cannot work alone. While the robot does the heavy lifting, human workers are controlling the placement of the bricks and ensure the quality of the work.

Social robots are also designed to interact with humans. What makes them different is that social robots can connect with humans on an emotional level using both verbal and non-verbal communication (Breazeal et al., 2016).

Social robots are used in various applications. The companion robot Wakamaru by Mitsubishi (Figure 14) can recognise faces, have conversations and shake hands with people (Robots Guide, n.d.). Wakamaru is also an example of a humanoid robot. As the name suggests, humanoid robots' form and functionalities resemble the human body and their capabilities.

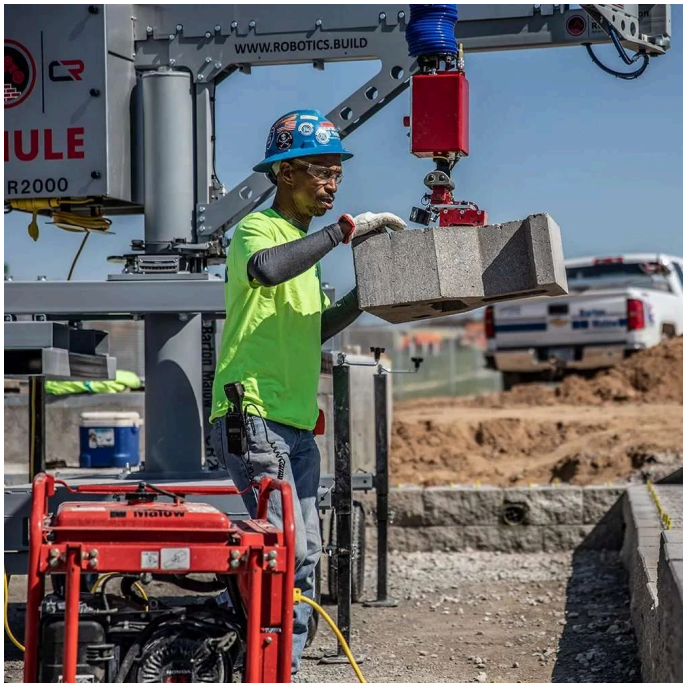

Figure 13. Service cobot SAM. Photo: Construction Robotics



Figure 14. Humanoid companion robot. Photo: Mitsubishi Heavy Industries

3.5.4 Robot assistant for professional painters

When looking at the different robot types, the development and design of robotics can be divided into task-oriented robots that work in limited environments (like industry robots) and interaction-oriented robots that collaborate with humans in open environments (like service and social robots) (Ishiguro et al., 2001). For this project, the focus will be on the latter one, as a robot will be developed that collaborates with painters in an open environment.

From the examples it is clear that some robots do not fall into “one robot category”, like the Wakamaru being both a humanoid and social robot, and Kennon and SAM being both a cobot and service robot. The robot assistant that was developed in this project also does not fall into one category. It is better described as a mobile service cobot.

In some situations, the robot assistant for painters performs tasks semi-autonomously, like navigating to the storage container or work site when told so. During navigation, the human workers can take over the physical control of the robot. Like the cobot SAM, the robot assistant does not take over the painting work itself, but instead assists with the physical load, while the painters remain in control over the quality of the work. The robot also complements the painters skills, where the robot focuses on physical loads, while the painter remains responsible for the craftsmanship.

So why use a robot and not a cart in this context? While carts or trolleys can help painters transport materials, they lack the adaptability and intelligence required to operate in the dynamic, real-world work environments. A robot assistant can navigate through the complex environment, avoid obstacles, and adjust its behaviour based on changing conditions on the worksite. It can also respond to user commands, where the painters stay in control. This makes it not just a transport aid, but a collaborative partner that enhances productivity, reduces physical strain, and supports safer, more efficient work practices.

3.5.5 User-Centered design

Designing this robot assistant for painters requires a User-Centered Design (UCD) approach to make sure the solution meets the needs of its end-users (Abras et al., 2004). With this approach, the stakeholders’ needs, the context, and feedback drive the development of the solution. This is why the users and other stakeholders are involved throughout the entire design process, and not just at the beginning or end.

In this project, the user's needs and preferences regarding functionalities, interactions and embodiment will be identified through interviews, on-site observations, a co-creation session (role playing simulation), and evaluations. This input will help inform design decisions and contribute to designing the ideal robot assistant for painters that fits in their work environment.

3.5 ROBOT BENCHMARKING

To get a better understanding of what kind of robotic solutions already exist, product benchmarking was used. Benchmarking is a tool to compare and analyse products (Anand & Kodali, 2008), in this case it helped to compare robots. The methodology was also used to gain insights in the current capabilities of robots, in what contexts they are being used, and what kind of components they have. Because there are many types of robots, the research scope was first narrowed down (Figure 15). Based on expectations of the client and the previous research from Hoogendijk and Muzus, drones, exoskeletons, educational, swarm and nano robots are outside the scope of this project.

Looking at collaborative, industrial, service, social, and humanoid robots helps to gain insights in their contexts, capabilities, and components that can inform the design of the robot assistant for painters. Collaborative and service robots are especially relevant for their ability to safely support humans in dynamic, real-world environments. Industrial robots could be informative for their robustness and safety, and social robots provide inspiration for intuitive interaction and communication. Though humanoid robots are less directly applicable, their design may inform aspects of the robot's interaction and interface.

The results of the benchmarking are summarised in Table 1-3.

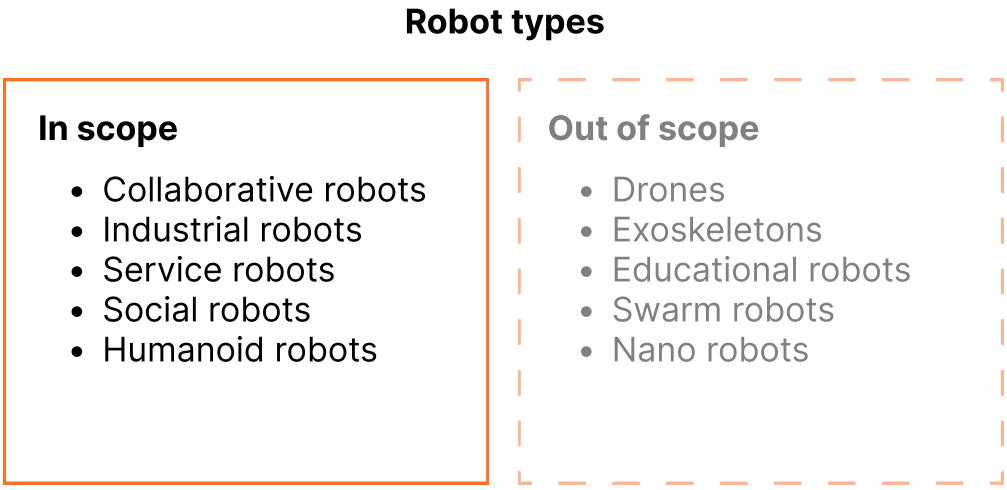

Figure 15. Research scope for benchmarking

Table 1. Benchmarking

Product		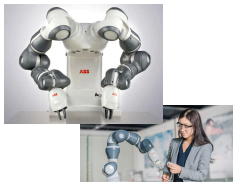	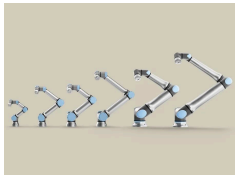	
Name	Whiz	YuMi single- and dual arm	UR cobots	Packbot
Creator	Softbank robotics	ABB	Universal Robots	iRobot, Teledyne FLIR
Context	Workplace, hospitality, healthcare, home	Manufacturing environments where people and robots work side by side	Companies, manufacturers	Police, military
Purpose	Cleaning, vacuuming	Assembly, repetitive tasks	Assembly, welding	Mapping environments
Capabilities	Autonomous navigation Manoeuvre around objects Cleaning	High agility (7 DoF/arm) High accuracy Reach = 56 cm	High payload capability (from 3 up to 16kg) Reach = 50 to 130 cm	Payload up to 20 kg with manipulator arm, slopes of 45 degrees, threat detection, bomb disposal
Components	Lidar sensor, optical and 3D cameras, wheel and vacuum motors, rotating brush, HEPA filters, dustbin and dust bags, swappable lithium battery, steering handle, display	7 axis robotic arms and joints in humanoid proportion Grippers with servo, vacuum and vision (camera) modules	6 rotating joints with harmonic drives, servo motors, proprietary sensor for measuring force and movement, force/torque sensor at tool flange	Manipulator arm, 360 degree turning flippers, GPS, compass, accelerometer, inclinometer camera's, thermal camera, LED, multiple detectors, microphone.
Source	SoftBank Robotics America, n.d.	ABB, n.d.	Robots Guide, 2024	FLIR, n.d.

Table 2. Benchmarking

Product	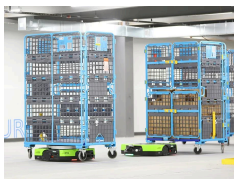		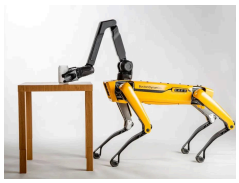	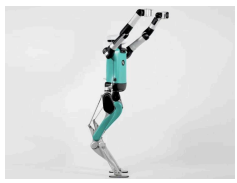
Name	Proteus	OTTO	Spot	Digit
Creator	Amazon Robotics	OTTO Motors	Boston Dynamics	Agility Robotics
Context	Distribution centre, warehouses	Distribution centre, warehouses, factories	Office, construction sites	Distribution, retail
Purpose	Transporting containers	Transport goods	Mapping environment	Help people anywhere they go
Capabilities	Autonomous driving and charging, pick-up and drop-off, obstacle detection, read barcodes	Autonomous driving & charging, obstacle detection, payloads 150-1900kg, no fixed infrastructure	Mapping, obstacle detection, crouch, all terrain, grab objects, stabilisation, omni-directional walking	Lift boxes, get up off the ground, navigate through all sorts of terrain, map environments
Components	Camera's, lidar, motors, power lifting mechanism, LED lights for human-robot interaction	Lidar, 3D vision system for object detection, AI, 28-V 40-Ah lithium-titanate battery	Battery (90 min), stereo camera, IMU (inertial measurement unit to measure acceleration, orientation and angular rates), force sensors in limbs.	Lidar, 4x depth cameras, IMU, brushless DC motors, 2 multi-thread CPUs
Source	Robots Guide, 2023b.	OTTO Motors, n.d.	Boston Dynamics, n.d.	Agility Robotics, n.d.

Table 3. Benchmarking

Product	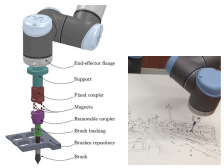	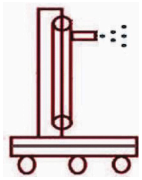		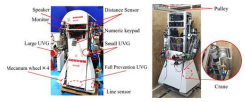
Name	UR10	Wall painting robot	ENDORSE	Q-bot
Creator	Universal Robots	Rani et al., 2024	IEEE Robotics	Matsuo et al., 2024
Context	Art, image processing	Painting smooth walls, flat ground	Industrial, aerospace	Uneven ground, narrow spaces, convenience store
Purpose	Watercolour painting	Wall painting	Sanding complex surfaces	Carriage robot
Capabilities	High agility (6 DOF) Payload of 10 kg Working radius of 1300 mm Repeatability 0.1 mm	Roller is automatic fed paint Doesn't work on slopes Only smooth walls Painter cleans and maintains it	Roller is automatic fed paint Doesn't work on slopes Only smooth walls Painter cleans and maintains it	Lift heavy objects without falling Self-weight compensation Omnidirectional moveability Multiple objects graspability Adhere to uneven ground
Components	Different brushes, brush repository, magnets, algorithms for artistic rendering	Painting arm (2 joint planar mechanism) that moves vertically and laterally to the wall, four separately moving wheels, rollers, ultrasonic range sensors (identify walls, determine boundaries of paint strokes), user interface, spray gun, infrared sensor	Standard industrial manipulator (allows lifts and rotations) Robotic arm Force sensor Sanding machine Laser scanner	Dual arm (5 DOF) Universal Vacuum Gripper (turnover prevention and self-weight compensation) Mecanum wheels, pulley, crane, adhesion mechanism, line sensor, distance sensor, speaker, monitor
Source	Scalera et al., 2018	Rani et al., 2024	Maric et al., 2024	Matsuo et al., 2024

Personal take-aways background research

It was useful to analyse what materials are commonly used in the workspace and what kind of activities are performed. This helped me get familiar with the terminology, which was important for preparing the upcoming interviews.

The background research on physical and ergonomic hazards also made me realise the urgency of finding a solution. Exploring the different roles and responsibilities within the painting industry helped me decide who I wanted to interview in the next phase. These different perspectives are useful to design, as it shows the different challenges in the industry.

Getting familiar with the different definitions of robots and the terminology around robot types and human-robot interaction really helps with designing my own robot. It gives me a better understanding of what kind of robot I'm actually building and how it could fit into the real world. Looking at real-world examples like SAM helps to see that robots in similar contexts can be accepted and have proven to increase efficiency and reduce the physical workload. They also don't replace humans, they assist them.

Comparing existing robots with the benchmarking method gave me a better idea of what's currently available on the market and what is already possible with robotic solutions. Seeing their capabilities will be helpful for brainstorming possible functionalities of the robot, and looking at the components will be helpful for prototyping and determining the components of the final design. This information was also important to keep in mind for the feasibility of the design, as I want the robot to be realistic to build and implemented as soon as possible to support the painters.

04 CONTEXT ANALYSIS

This chapter summarises the main findings from context visits and interviews. It explains the different contexts and environments in which painters work, and the challenges they face in their day-to-day tasks. Chapter 4.1 explains the method used for gathering these insights.

Three main contexts were identified: the industrial, residential, and commercial context (Chapter 4.2.1). The interviews and context visits were mainly conducted in the latter two.

The context visits and interviews showed a clear difference between the residential and industrial context. The workers from the industrial context have to deal with a lot of regulations due to the dangerous fumes, gasses and high temperatures they encounter. The workspace itself is also obstructed by many pipelines, and painters even have to climb or lie down sometimes to reach the surfaces they need to paint. The insights and challenges from the industrial context are explained in Chapter 4.2.3. Painters from the residential context have other challenges, like difficult communication with tenants, and dealing with gardens, fences and other obstacles. Chapter 4.2.4 summarises the insights and challenges for the residential context.

Despite the differences, there are also shared challenges across both contexts, like difficulties with communication in multidisciplinary teams, repetitive work and standing in uncomfortable positions. These general insights are summarised in Chapter 4.2.5. Chapter 4.2.6 combines the contextual insights into an user journey of a painter, highlighting the main disliked and liked tasks. All of these findings helped to refine the design scope of the robot, which is presented in Chapter 4.3.



Figure 16. Context analysis

4.1 METHOD

To get an understanding of different painting contexts and the challenges for each of them, multiple interviews were performed with workers from different painting contexts.

As humans were involved in this research, a Human Research Ethics was necessary. Prior to this and upcoming user studies, a HREC ethics application was prepared and approved, including the template of the informed consent forms, a data management plan (DMP), a HRX checklist and device report (application number: 4867). The Research Ethics can be viewed in Appendix E.

4.1.1 Participants

In total, interviews were held with workers from three different painting companies. The interviews included the following participants:

- All-round painter (aged between 55-64) from painting company A
- All-round painter (aged between 25-54) and project leader, from painting company B
- Safety expert, safety responsible, project leader, executor, two foreman painters (both aged between 55-64), and one painter (aged between 25-54), from painting company C

Painting company A works for both the commercial and residential context, painting company B works for the residential context, and painting company C works for the industrial context.

Besides interviews with painting companies, an interview was also performed with design agency Muzus who did previous research on the painters' challenges in the workspace. The insights gathered from this interview are summarised in Appendix F, and helped to prepare for the interviews.

4.1.2 Tools and equipment

1. Consent forms
2. Robot Functionality Cards
3. Phone for audio recording and making pictures
4. Pen
5. Notebook

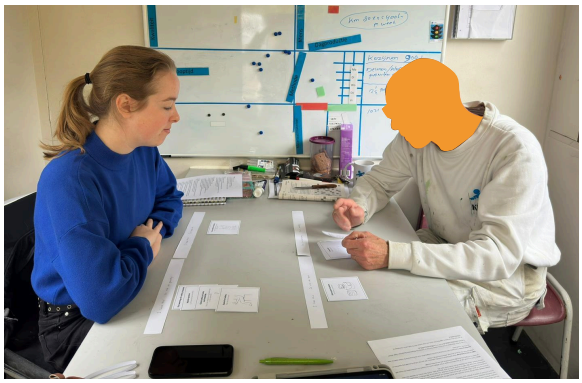

Figure 17. Robot Functionality Cards being used during an interview

4.1.3 Procedure

The interview began with the researcher introducing themselves to the participants and explaining the goal of the project. The procedure was explained and the participants were informed about the data collection and of their rights through an informed consent form. The signed consent forms were later uploaded to a secure environment.

When everything was clear to the participants, the researcher began the audio recording and started the interview.

Semi-structured interview

A semi-structured interview method was used (Adams, 2015). For this interview structure, open- and closed ended interview questions are prepared, which are often followed up with why and how questions. The prepared questions for the interview can be found in Appendix G. The questions served as a guide and gave the interview structure, but the researcher mainly let the participants guide the conversation and went along with their answers.

Robot Functionality Cards

To gather information about the desired functionalities of the robot and to explore potential design opportunities, the method *Robot Functionality Cards* was developed. These cards encouraged participants to talk about the challenges they face in the workspace and the kind of support they would like from a robot. They also provided insights into how open participants are to the idea of a robotic solution.

Design process Robot Functionality Cards

The cards were organised into themes like safety support, organisation and storage, physical support, tool and material maintenance, mobility and navigation, cleaning environment, and workspace atmosphere. The final set of cards can be seen in Figure 18-24.

The Robot Functionality cards were improved several times as the project advanced. Initially, they covered functionalities, interactions, and form, but in the end, only the functionalities were used. This was decided to avoid overwhelming the painters with the cards and to focus on functionalities first. The initial version with the form and interaction cards can be found in Appendix L. The set was then reduced to a smaller, more manageable size and a Dutch translation was added as the users sometimes struggled with the English definition.

Workspace tour

After the interview, the researcher asked for a workspace tour. During this tour, the researcher gained knowledge of what the contexts look like and what kind of materials are used.

Safety support
The robot enhances safety by monitoring for hazards and offering functionalities to reduce risks.



Figure 18. Robot Functionality Cards - Safety support

Organisation and storage
The robot organises and stores the tools and materials.

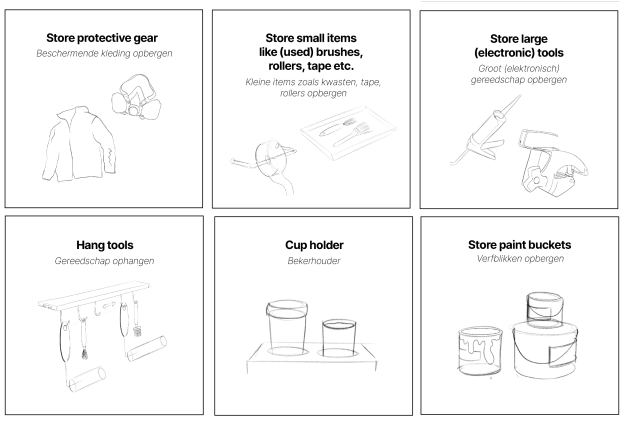

Figure 19. Robot Functionality Cards - Organisation and storage

Physical support
The robot assists with physically demanding tasks, reducing the physical strain.

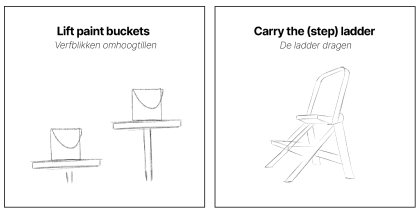

Figure 20. Robot Functionality Cards - Physical support

Tool and material maintenance
The robot ensures painting materials and tools are and stay in optimal conditions.

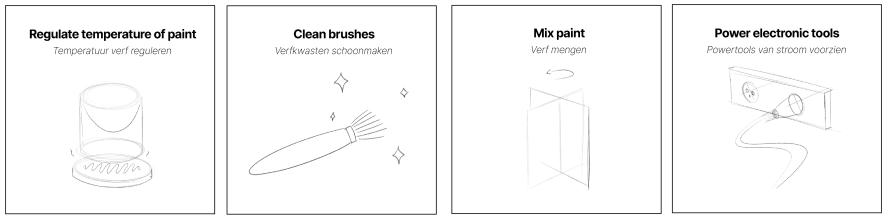

Figure 21. Robot Functionality Cards - Tool and material maintenance

Mobility and navigation
Functionalities regarding the robot's mobility on the job site.

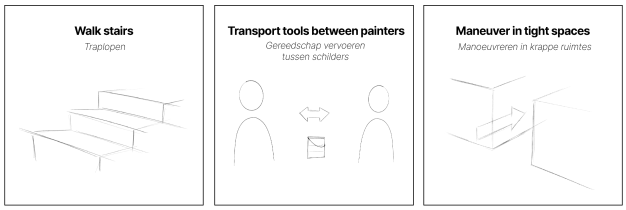

Figure 22. Robot Functionality Cards - Mobility and navigation

Cleaning environment
The robot is used for keeping the job site clean.



Figure 23. Robot Functionality Cards - Cleaning environment

Workplace atmosphere
The robot is used to enhance workplace atmosphere



Figure 24. Robot Functionality Cards - Workplace atmostphere

4.1.4 Data collection and analysis

After the interview, the audio recording of the interviews was transcribed. Any personal information was anonymised. The transcription of the interviews can be found in Appendix I (with workers from painting company A), J (with workers from painting company B) and K (with workers from painting company C).

The transcripts were analysed in a step-by-step process, following a method by Philip Burnard (1991). The transcripts were first read through and interesting quotes are highlighted. These quotes were then grouped to extract key insights from each interview. After conducting several interviews across different work contexts, the insights were compared and categorised. They were divided into those relevant to both the commercial and industrial contexts, those specific to the industrial context, and those specific to the residential context. A summary of these findings is presented in Chapter 4.2.

4.2 INTERVIEW INSIGHTS

4.2.1 Different contexts

The profession of painting is very diverse. Work can be executed in the following contexts:

- Maintenance and sustainability (verduurzaming) of homes/apartment buildings owned by housing corporations (social housing) and homeowners' associations (VvE's)
- Maintenance of private homes
- Maintenance of commercial properties, like shops, hospitals, schools, prisons, etc.
- Restoration work (monuments)
- Painting work for new homes/construction projects
- Industrial blasting and painting (Industrieel straal- en schilderwerk) of bridges, weirs (stuwen), storage tanks, etc.

(OnderhoudNL, 2024)

Generally, the contexts can be divided into residential properties, like private and rental homes, commercial properties, like schools and offices, and industrial projects with pipelines and tanks (Figure 25). In all cases work is performed both inside and outside.



Figure 25. Three different painting contexts; residential (left), commercial (middle), and industrial context (right)

4.2.2 Different environments

There are many different environments the painters work in. Painting work can be done both inside and outside. However, painters working for painting companies mainly have outside jobs, as painting work inside is often done by the residents themselves, by volunteers or freelancers (based on interview with painter working in residential and commercial context). Priority is also given to outside jobs, because it relies on the weather. If it's too cold, it rains or if the humidity level gets too high, the workers cannot do painting work outside.

For outside work, painters often need to renovate the outside of the entire building and they need to use scaffolding or mobile scaffolding (scaffolding with wheels) to reach the entire surface. The scaffolding can differ in width, depending on the size of the job and the number of workers working on the scaffolding. While scaffolding is the most common structure and mainly used for terraced housing, other tools like a "hangbrug installatie" or a cherry picker can be used. Although it is not common, a worker could execute the work while hanging from a safety line.

(OnderhoudNL, 2024)



Figure 26. Different environments for painters

4.2.3 Insights industrial context

When interviewing painters from different contexts, it became clear that were many differences between the two. The following contextual insights apply specifically to the industrial context (Figure 27). The full interview transcript with professionals from the industrial context can be found in Appendix K.



Figure 27. The industrial context

Cramped and narrow working space
The workspace of the painters in an industrial context is very small and chaotic. Pipes run everywhere (Figure 29). Painters often have to take on uncomfortable positions to reach all areas. The work involves climbing, crouching and laying on the back.

'In many cases, the workers have to crawl, lie down, and climb to perform their tasks.' - Safety responsible

Dangerous working conditions
The painting work that is done in an industrial context is often dangerous work. The painters have to deal with dangerous gasses, particles and hot pipes. There are also many hot pipes in the workspace, causing the temperatures to rise quickly. On summer days, painters often have to take shifts or need to stop working early because of the temperatures get too hot. The heat is measured manually twice a day. By the time the second measurement is taken, the temperatures are often already too high.

'The grid released during blasting is often a combination of rust and paint residue. This is also toxic to the body' - Younger painter

'Some pipes are as hot as 200 degrees.' - Executor

Dealing with leakages
The workers all wear a gas detection meter. When the meter suddenly detects a different gas concentration, the team is alerted must evacuate. A safety department member must enter the hazardous area to identify the leak. The painters must stop working until the gas concentration returns to a safe level.

'Currently, people have to enter the space with compressed air to detect a leak.' - Executor

'I think it is dangerous for the people who have to go in to detect the leaks.' - Older painter

Strict (safety) regulations
Because of the dangerous working conditions, the regulations are much stricter here. For executing the work, the executor tries to get all work permits in order. It often happens that there is a small change in the work that needs to be done. The work permits then need adaptations and the work cannot be started before the permits are in order. This often causes delays in the work.

'Sometimes you have to adjust the permit because the situation changes, and then you get delayed again' - Executor

More strict about personal protection equipment
There are a lot of safety protocols. For different painting activities, like blasting or sanding, you need a different set of personal protection equipment. It can even be overwhelming to remember all of the rules and protocols.

'We have a lot of protocols and data on workplace hazards. For each situation, workers have to wear different personal protective equipment' - Safety expert

ATEX-zones
Because of the highly explosive gases that run through the pipes, the workers are extremely careful with devices they bring to the work site. ATEX-zones are areas where there is a risk of explosion, and this includes their work site. All materials and tools are stored outside the factories, away from the ATEX-zones. Even paint has to be mixed outside of these zones. All the devices that are used in an ATEX-zone should also be ATEX-certified.

'Our devices that we take to the workplace must also be ATEX certified due to spark and explosion risks' - Safety responsible

Most work is done on scaffolding
Industrial painters work with huge pipes and tanks. This means most work has to be done on scaffolding. Work that is done from the ground is limited to some maintenance work, the lower sections of pipes or pipes that run mostly horizontal. As most surfaces they need to work on are round, it's also more difficult to reach all areas.

'We don't do much work from the ground. If the workers can reach it from the ground, then maybe only the lower part of the pipe. But often the pipes goes up and then you have to go up yourself.' - Safety responsible

Walking many stairs
The factories often have more than 100 floors. When tasks are located on upper levels, such as the 50th floor, the workers first need to get the material to that floor using the stairs. There should be a lift to bring them up, but it's often broken.

'The lift is often broken. I once walked 80 floors in one day. Sometimes you also have to carry your materials yourself.' - Foreman painter

No light
During the early mornings or during winter times, there is little light in de factories. It makes it difficult for painters to see what they are doing, but it also increases the risk of overlooking physical hazards.

'We often have too little light. Especially in the morning or in winter (...) Even with a helmet lamp, it is still difficult and you need a small light to get into small corners.' - Younger painter

4.2.4 Insights residential context

Painters working in the residential context have different working conditions than the industrial context. The following contextual insights apply specifically to the residential context. The full interview transcript with the younger (10 years of experience), older painter (38 years of experience) and project leader from the residential context can be found in Appendix I and J.

Gardens, balconies and fences can hinder the work space
Painters frequently face obstacles such as balconies, gardens, and furniture blocking access to the surfaces they need to work on (Figure 28, left). Especially the backyard can be challenging because plants cannot be moved.

'Outside, there is often something in the way, such as front garden or a fence.' - Younger painter

'You often have to go into gardens, sometimes you even have to climb over fences' - Younger painter



Figure 28. In rental homes, gardens and fences can hinder the work space (left). They use construction lifts to get their materials on the scaffolding (right)

Less strict with safety regulations
In the residential context, they take a much more lenient approach to safety rules and personal protective equipment compared to the industrial context. There are rules in the CAO (Collective labour agreement) that you can be fined if you don't wear it, but in practice they are not very strictly checked. It is often the responsibility of the painter himself to work safely. Important CAO rules can be found in Appendix C.

'It's all there, and actually we should use it, but we are just so used of not using it.' - Older painter

'Often, people take the limiter off tools because they just want to keep working. Ultimately, it is a personal choice: do I temporarily accept a bit more load to finish faster, or do I want to continuously be a bit loaded and play it safe all day? Many people still choose to finish the work faster.' - Younger painter

Dealing with tenants can be challenging
Issues that tenants have are communicated through mail with the company or the municipality. The issues are not resolved on the spot.

'People quickly send complaints via email and don't come directly to me if there's an issue. One-on-one is much easier, then there's no one in between.' - Older painter

Communication with tenants can be difficult due to the language barrier
Sometimes the painters need to ask the tenant for a request, like opening a fence, door or window. With social housing, if often happens that the tenants cannot understand or speak Dutch which makes it difficult to communicate with them.

'The women are often at home but do not always speak good Dutch. If you want to explain that a window has to be opened for a moment, that often causes miscommunication.' - Project leader

Tenants can be unwilling to share power
It can be quite challenging to get power from tenants. Tenants don't like the painters to use their electricity to work on the neighbours houses.

'You were sanding and the plug was pulled. 'Are you working next door now? Ask for power there. I'm not going to pay for that.' - Older painter

Rental homes have no control over the renovation
As renovation is arranged through the municipality, the tenants don't have much control about the renovation.

'Especially contact with people sometimes makes the work difficult. They must give us the opportunity to paint. That's in the rental contract.' - Older painter

Social housing is less critical than private homes
Tenants in social housing are generally less critical of the work quality compared to homeowners. Homeowners, having paid for the renovation themselves, tend to be more critical and often request certain parts to be redone.

'Most of the projects are rental properties, social housing. They are less critical than private housing.' - Younger painter

Carpenters and glaziers must carry heavy materials
Painters often work closely together with carpenters and glaziers. They also fall under the same labour agreement as them. Often, the painters don't need to carry a lot of heavy materials to their worksite, but the carpenters and glaziers frequently carry heavy items like doors, glass, iron and other materials from the storage area to the worksite.

When you see what those guys [carpenters and glaziers] all drag back and forth every morning and afternoon just for a few windows and doors.... You really need a whole shop for that. And then they still often have to walk up and down because they need something they didn't expect. If you always have all your materials on hand, it would make a huge difference. - Younger painter

4.2.5 General insights and challenges

While the two contexts have many differences, they also share similarities. The following insights and challenges apply for both the industrial and residential context.

Dealing with humidity and temperature is a constant challenge
If the humidity exceeds 85%, the paint doesn't adhere properly. In the industrial context, the temperature often gets too hot because of the hot pipelines. Especially in summer, this is a big issue and workers have to take shifts or stop working.

'If it is too wet, you cannot paint.' - Older painter working mainly on residential properties

'Often after the second break then they have to stop working because it is too hot.' - Safety responsible at industrial context

Reluctance to change because of established habits (mainly older painters)
Painters from the older generation sometimes show resistance to adopting newer safety practices or wearing personal protective equipment. This often results from long-standing habits and a mindset of "this is how I learned it," having years of experience in the field.

'It's all there [talking about the personal protective e*quipment], and actually we should use it, but we are just so used of not using it.' - Older painter working mainly on residential properties*

Language barriers can cause safety concerns
On large projects you often have painters from different nationalities. The language barriers can even pose safety risks as instructions or warnings aren't understood.

'There were so many different nationalities together. Nobody could communicate with each other. You can't warn each other because no one understands.' - Older painter working mainly on residential properties

'We try to minimise the language barrier by putting people who speak the same language together, But sometimes we can't avoid it.' - Project leader at industrial context

Planning issues are common
It often happens that the work takes longer than determined by the calculator. This is because weather and other practical issues such as walking back and forth with materials are not taken into account during calculations. It can also happen that the work is delayed because the work permits are not in order and need to be adjusted.

'To get the work done on time is the most challenging part of my job.' - Foreman painter in industrial context

'The expected pace is quite high. If the work takes longer than planned, too bad. Then it's the calculator's fault, he should have looked better.' - Older painter working mainly on residential properties

Scaffolding is not tailored to the painters
Scaffolding is not tailored to the needs of painters. The structure is predetermined by the project leader, who must deal with the conflicting needs of painters, carpenter and glaziers. As a result, the height of the scaffolding platforms is often not ideal for painters and they have to take on uncomfortable positions to reach all areas.

'Scaffolding isn't adjusted to the wishes of the painter. When the painter comes to the job site, the scaffolding is already set up. This causes them to go into uncomfortable positions.' - colleague at Muzus

'The scaffolding height is fixed. You can't make it ideal for everyone. People have different needs.' - Project leader in residential context

Painting often involves being in uncomfortable positions
Painters often have to position themselves in uncomfortable positions to reach all areas of the surface they need to work on (Figure 29). These bad postures can cause physical strain on the neck, knees, wrists and more.

'We regularly have to deal with difficult workplaces. In many cases, the workers have to crawl, sneak, lie down, climb over everything to perform their tasks.' - Safety responsible in industrial context

'They sometimes have to stand in uncomfortable positions to perform their work, such as working on their knees or lying on their stomachs.' - Project leader in residential context



Figure 29. In an industrial context, the workers often have to take on uncomfortable positions to reach all areas.

Shortage of young painters

The industry is facing a shortage of young painters. Many painters are becoming older and get more physical issues. There are fewer people applying for jobs as painters. Painting is viewed as physically challenging and not payed well. The project leader even agrees that the workers should be getting paid more to make the job more attractive.

'Many craftsmen, such as carpenters and painters, are older, often 50+, and more prone to physical issues like knee and wrist problems.' - Project leader in residential context

'I think parents encourage their children to choose less physically demanding, better-paid professions.' - Project manager in residential context

Repetitive work is physically and mentally challenging

The work of painters is repetitive. Painters often perform the same tasks over and over on one day. This is not only physically challenging, but the work can also be mentally challenging or boring.

'But I think repetition can be tiring. (...) It may seem like there is no end in sight, and everything is the same.' - Younger painter in residential context

Alternate tasks to avoid fatigue and boredom
To avoid fatigue and boredom, painters can alternate tasks throughout the day, reducing the strain of repetitive work by switching between sanding, priming, and painting.

'You shouldn't paint ceilings all day. I don't sand all day either. I sand a bit, then I prime and the next day I continue.' - Older painter working mainly on residential properties

'If you start doing repetitive work, it gets boring.' - Older painter working mainly on residential properties

Painters are proud of their work and think it's rewarding
Painters take pride in their work. They are especially proud and it feels rewarding to look at the end result. Especially renovating social housing feels rewarding as they feel they are contributing to the community.

'What I like is that it always gives results. You really make something better.' - Younger painter residential context

'You look at the result together with colleagues and then you feel proud.' - Younger painter (Muzus, 2024)

A robot cannot replace painter's handwork
Painting is a traditional profession. Painters don't believe robots can replace the role of painter and that it should be responsible for the painting work itself.

'A robot would never take over the job of a painter.' - Older painter working mainly on residential properties

A supportive robot assistant that follows you around with your materials
Despite the skeptical view of robots ability to paint, painters are open to the idea of a supportive robot. They would like to get a robot to help them with their materials and that follows them around the worksite.

Maybe something similar to those restaurant robots. That could be possible. That all your stuff is in there and you don't have to walk back every time. The robot could walk with you.' - Older painter working mainly on residential properties

'Yes for maintenance jobs it might work. Then it's for the small fix dings on the ground floor. A robot that follows you with all your materials.' - Executor in industrial context

4.2.6 Conclusion

From the interviews and contextual research, it becomes clear which aspects of their work painters enjoy and which they find physically or mentally challenging. Painters take great pride in their work. The painting work itself is seen as the most enjoyable part of the job.

However, several parts of the job are perceived as difficult, tiring, or frustrating. Tasks such as lifting and moving heavy materials, sanding, and masking are physically demanding. Repetitive work can also be mentally exhausting, especially when performed for long periods without variation. Painters often try to avoid fatigue and boredom by switching between tasks throughout the day.

Work planning issues are a common frustration. Delays due to weather, miscalculations, or missing permits make it hard to finish the job on time. Painters also blame poor planning by the executor for not completing the job in time. The scaffolding and workspace conditions are also far from ideal. Painters often have to work in uncomfortable positions, due to scaffolding not being tailored to their needs. This can lead to physical strain on the knees, back, wrists, and neck.

To visualise the results, an user journey of a all-round painter is made (Figure 30). It gives an overview which tasks are perceived fun (above the neutral axis), and which tasks are perceived as challenging or not fun (below the neutral axis).

The disliked tasks are design opportunities for the robot to support the painter, to make the tasks more enjoyable or less physically challenging. The tasks painters enjoy most can help define what the robot should *not* take over, so that painters can focus on the parts of the job they love.

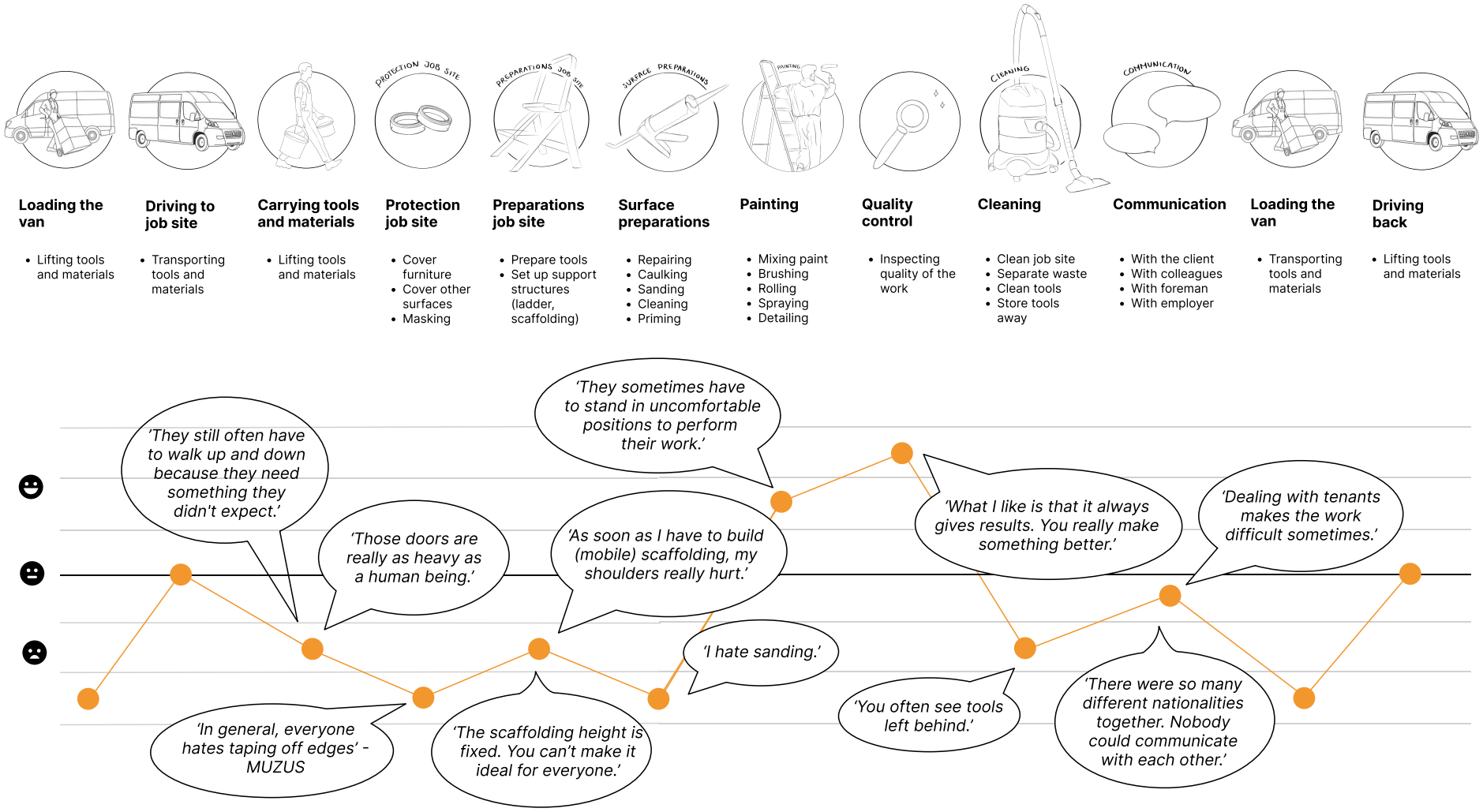

Figure 30. User journey of an all-round painter

4.3 SCOPE

This project focuses primarily on developing a robotic solution for use in residential and commercial painting contexts. These two types of contexts are quite similar, with the main difference being that commercial properties are usually larger, and the painters don't have to work around tenants.

The industrial painting context, while relevant, falls outside the main scope of this project. It presents additional challenges, such as stricter safety regulations, higher physical risks, and more complex workspaces with many obstacles and limited accessibility. These factors make it more difficult for a robot cart to directly assist painters on-site in the same way as in residential or commercial settings.

A robot solution could still be useful in the industrial setting, but in a different way. For example, it could help with safety monitoring, organising and transporting tools and materials as close to the job site as possible, and improving communication between team members. The insights gathered through earlier observations and interviews with industrial painters, along with a later concept evaluation session, can help identify possible overlaps in needs between contexts. The insights for the industrial context can also be used for future work aimed at improving working conditions of the industrial context.

Based on the insights and the user journey created for the residential and commercial painting contexts, opportunities have emerged for the robot to improve the work environment of painters. For example, the robot could help with carrying the large materials from the van or storage container to the job site, assist with sanding or cleaning, or help improve communication.

At the same time, the insights also showed where a robot should not assist. The painting work itself, or the inspection of its quality, is highly valued by painters and considered part of their craftsmanship. Even though the painters like painting, there are also challenges that arise with the painting work, like having to work in uncomfortable positions. In those cases, a robot could still play a role. Not by taking over the painting work, but by reducing the physical strain involved in the task.

The design of the robot's functionalities, interaction, and embodiment (design goals formulated in Chapter 2.2.3) will be based mainly on the requirements of the residential and commercial contexts. Chapter 5 presents the specific design requirements defined for this scope, and Chapter 6 explores and evaluates potential ideas and concepts that fit within it.

Personal take-aways Contextual insights

Using the Robot Functionality Cards during the interviews helped painters to express and reflect on what they wanted the robot to do. Sometimes, it was hard for them to articulate their needs, but the cards provided a helpful starting point. In the final set, the Form and Interaction cards were not used because they gave too much direction in the initial phase of the project. The cards, especially the interaction cards, could be useful for other designers or for a later stage of the project.

During the interviews and observations with painters from different contexts made me realise how different the painting contexts really were. The industrial context turned out to be way more complex than I thought with all the safety risks, tight spaces, and strict regulations. That was a valuable lesson in understanding real-world limitations.

However, there were also many similarities between the industrial context and the residential context, like the physical load of carrying materials to the workspace and the language barrier within teams.

It was also valuable to talk with different roles within a team, such as a project leader, safety officer, or foreman painter. Each role has its own challenges, and it is important to speak with all of them to understand whether the robot could add value in addressing those challenges.

The user journey was a useful overview to see where the robot could support the painters. However, it doesn't capture every challenge they face, and I expect more design opportunities will come up in the upcoming interviews. But the user journey serves as a good starting point for ideation.

05 DESIGN VISION

This chapter explains the formulated the design vision based on the background research and context analysis together with the design requirements (Chapter 5.2).

5.1 DESIGN VISION

Based on the background research from Chapter 3 and contextual insights gathered in Chapter 4, the following design vision was formulated:

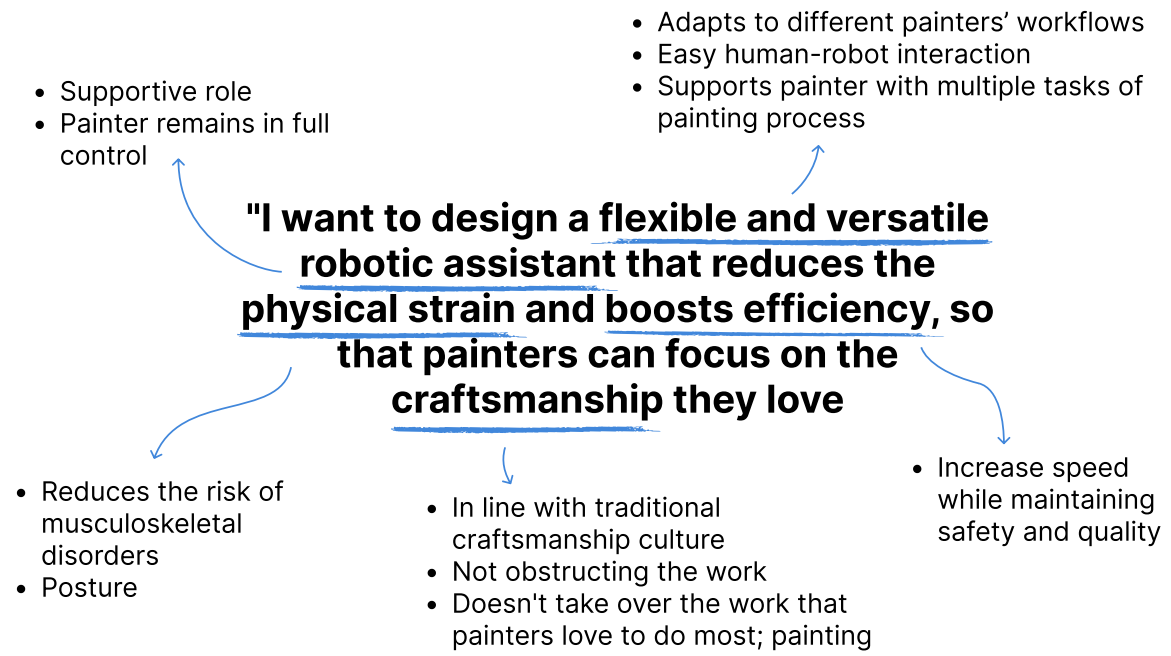

Figure 31. Updated design vision

The design goal for this project is to design a robotic assistant that reduces the physical workload and increases efficiency for painters. *Flexible* means that the robot is suitable to collaborate with every painter that each have different preferences. *Versatile* means that the robot can help assist with multiple tasks and challenges that arise in the workspace.

The robot is designed to play a supportive role, always working with the painter, not replacing them. Painters stay in full control at all times. The robot will also not take over the tasks that painters enjoy most: painting. The robot be designed taking into account the traditional craftsmanship culture. This will be achieved by actively involving painters throughout the entire design process, so the solution stays closely aligned with their needs and preferences. The design vision helped formulating the design requirements and wishes, which are explained in Chapter 5.2.

5.2 DESIGN REQUIREMENTS

The design vision gives more direction for the project, and the intended outcomes were formulated. The requirements and wishes are based on a combination of insights gathered throughout the project, aiming to support those intended outcomes. The requirements are based on earlier contextual research, and additional input gathered during user evaluations carried out over the course of the design process.

5.2.1 Intended outcomes

The intended outcomes of the project are:

- The robot improves the health and safety of painters by lowering their physical workload, avoiding the creation of new risks, and complying with relevant safety regulations
- The robot makes the painting process more efficient by supporting painters in multiple tasks and assisting them across different working postures
- The robot is able to collaborate effectively with painters of varying experience levels and ages, making them feel supported rather than replaced

For these intended outcomes, the design requirements and wishes are formulated in Chapter 5.2.2 and 5.2.3.

5.2.2 Requirements

The design requirements of the robot are summarised in Table 4, organised in categories functionality, embodiment and interaction. The table outlines each requirement along with the part of the research it was based on. Some of the requirements were based on the stakeholder values, or the contextual insights that were explained in Chapter 4. Other requirements were determined by the research that will be presented in the upcoming chapters, like the concept evaluation, the co-creation session or the aesthetic evaluation.

Table 4. Design requirements

#	Category	Requirement	Based on
R1	Functionality	The robot must have a worktop that can lift tools and materials (maximum height 95 cm)	(Hoogendijk, 2024)
R2	Functionality	The robot must have a storage compartment of at least 50L to store the materials and tools painters need for the day	Contextual insights Chapter 4.2 & Concept evaluation Chapter 6.4
R3	Functionality	The robot must be able to carry a ladder	Contextual insights Chapter 4.2
R4	Functionality	The robot must be able to charge batteries of electronic devices inside the storage compartment	Co-creation session Chapter 7.3
R5	Functionality	Items placed on or stored within the robot must remain secure and not shift or fall off during transportation	Co-creation session Chapter 7.3
R6	Functionality	The robot must be locked with a key when left unattended	Co-creation session Chapter 7.3
R7	Functionality	The robot must be able to follow the painter to the workspace	Co-creation session Chapter 7.3
R8	Functionality	The robot must have environment awareness to avoid accidents, not hinder the painter's movements, and avoid damaging personal property such as gardens and furniture	Contextual insights Chapter 4.2, & Interaction evaluation Chapter 7.5
R9	Functionality	The robot must be charged inside the storage container	Interaction evaluation Chapter 7.5
R10	Functionality	If the robot runs out of battery, it must be possible to transport the robot back to the charging station	Concept evaluation, Chapter 6.4
R11	Embodiment	The robot fits in regular lifts (width = 90 cm, depth = 100 cm) and through doorways (width = 80 cm, height = 210 cm) (Detronlifts, n.d.)	Contextual insights Chapter 4.2
R12	Embodiment	The robot must have an emergency stop button	Co-creation session Chapter 7.3
R13	Embodiment	The robot must have an on and off button	Co-creation session Chapter 7.3
R14	Embodiment	The robot must have front and rear lights	Co-creation session Chapter 7.3
R15	Embodiment	The robot must have robust wheels and capable locomotion to handle various terrain types, including small obstacles like curbs and doorways, and slopes up to 1:20 (5%), based on wheelchair accessibility guidelines (Mobility Advisor, n.d.)	Co-creation session Chapter 7.3, & Interaction evaluation Chapter 7.5
R16	Embodiment	The robot must be dust proof	Interaction evaluation Chapter 7.5 & Aesthetic evaluation Chapter 7.6
R17	Embodiment	The robot must be visible in context to avoid accidents	Aesthetic evaluation Chapter 7.6
R18	Interaction	Interaction with the robot must be easy and intuitive, offering multiple control options to accommodate user preferences	Interaction evaluation Chapter 7.5
R19	Interaction	The painter must maintain control over the robot's behavior, with a manual switch to take over locomotion when needed	Stakeholder values Chapter 2.1 & Co-creation session Chapter 7.3
R20	Interaction	The robot must give verbal or non-verbal confirmation of received commands.	Interaction evaluation Chapter 7.5

5.2.2 Wishes

The design wishes are summarised in Table 5, organised in categories functionality, embodiment and viability. It also outlines on what part of the research the wish was based on.

Table 5. Design wishes

#	Category	Wish	Based on
W1	Functionality	The robot should be suitable for diverse environments (inside, outside, on the gallery, and wide scaffolding)	Co-creation session Chapter 7.3
W2	Functionality	The robot has a construction light which height and angle can be adjusted	Contextual insights Chapter 4.2, & concept evaluation Chapter 6.4, & Co-creation session Chapter 7.3
W3	Functionality	The storage compartment of the robot can fit a 10 L paint bucket	Contextual insights Chapter 4.2
W4	Functionality	The robot's storage compartment can be accessed easily and lights up for visibility	Co-creation session Chapter 7.3
W5	Functionality	The robot can carry large materials	Contextual insights Chapter 4.2
W6	Functionality	The robot can keep smaller tools organised	Co-creation session Chapter 7.3
W7	Functionality	The robot should be able to provide weather reports and store weather data, with an option for the painter to turn weather notifications on or off	Interaction evaluation Chapter 7.5
W8	Functionality	The robot can translate conversations between colleagues and between painters and tenants	Contextual insights Chapter 4.2
W9	Functionality	The robot can be charged on-site	Interaction evaluation Chapter 7.5
W10	Embodiment	The robot fits in a small construction lift (100 cm wide, 100 cm deep)	Contextual insights Chapter 4.2
W11	Embodiment	The appearance of the robot should align with aesthetic preferences of painters	Aesthetic evaluation Chapter 7.6
W12	Embodiment	The robot should be easy to clean, avoiding small corners and high-textured materials that collect dust or paint	Aesthetic evaluation Chapter 7.6
W13	Embodiment	The robot should have handles to push or pull the robot in a desired position	Co-creation session Chapter 7.3
W14	Embodiment	The robot should be waterproof	Aesthetic evaluation Chapter 7.6
W15	Embodiment	The robot should be easy to repair	Stakeholder values Chapter 2.1
W16	Viability	The robot should be appealing for investment and priced competitively with similar robotic solutions	Stakeholder values Chapter 2.1, & Interaction evaluation Chapter 7.5
W17	Viability	It should make the painting profession more attractive, bringing novelty to the workspace and attract new (young) workers	Contextual insights Chapter 4.2 & Co-creation session Chapter 7.3
W18	Viability	The technologies used in the robot should be commercially available	Stakeholder values Chapter 2.1

06 IDEATION AND CONCEPTS

With a clearer understanding of what painters enjoy and what tasks they see as challenging, it is time to think about how a robot could help them in their work. The contextual research showed that painters are not looking for a robot to replace them, but rather to assist them with difficult or repetitive tasks. The ideation process builds on the user journey (Chapter 4.2.5), the defined scope (Chapter 4.3), the design vision and the design requirements listed in Chapter 5. This chapter begins by explaining the methods used for generating ideas for the design vision (Chapter 6.1). In Chapter 6.2, the ideas are grouped into clusters and evaluated, leading to seven concepts with the most interesting functionalities. The concepts were evaluated by workers from the residential and industrial context to see which functionalities they would like their robot assistant to have (Chapter 6.3).

6.1 METHODS

To spark creativity and help with the ideation process, a variety of methods were used as tools and sources of inspiration (Figure 32). Analysing existing tools painters already use helped to understand with what the painters are already familiar with (Chapter 6.1.1). Additional ideas came up during creative sessions with students and design experts, who brought new perspectives and ideas. The results from these sessions are discussed in Chapter 6.2.2. Rapid prototyping (Chapter 6.2.3) also helped coming up with new ideas about functionality and mechanisms. Finally, AI visualisations explored and offered inspiration for the embodiment of the robot (Chapter 6.2.4).



Figure 32. Methods used for ideation

6.1.1 Analysing current tools and use-cues

An analysis was conducted on existing solutions currently available on the market for painters (Figure 33). These tools range from tool belts and stilts to modular storage systems. The full analysis can be found in Appendix M.

The current tools inspired ideas for the ideation. For example, the modular storage box makes it easy to transport and organise many items. The modularity could also be integrated into some elements of the robot, to add more storage compartments. Various storage and drawer products revealed smart ways of organising tools, and the paint belts and tool had a simple mechanism to hook and hang up tools.



Figure 33. Existing tools

Two brands of industrial vacuum cleaners were compared (Figure 34 and 35), and analysed to understand how they communicate functionality through use-cues (Figure 36). These types of tools are already familiar to painters, making them a useful reference for designing robot features that feel intuitive and easy to use. The full analysis can be found in Appendix M.

The industrial vacuums by Makita and Festool have a strong brand identity, using distinct colours to highlight the parts that users can interact with. These vacuums look similar to robot carts, and also served as inspiration for the robot's embodiment.

The Makita industrial vacuum is often seen as practical and reliable. It uses icons and indicators to communicate how users should use it. The Festool tools are seen as more premium products, with their sleek and more elegant design. Festool uses the green colour to communicate the interactive elements of the vacuum.



Figure 34. Makita tools (Makita, n.d.)



Figure 35. Festool tools (Festool, n.d.)

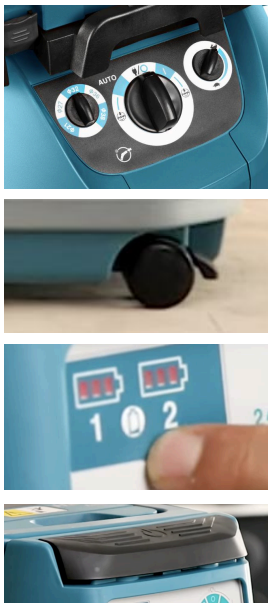

Turning knob for speed
Using icons rabbit (fast) and turtle (slow)

Wheel lock lever
Prevent product from moving

Lights for battery indicator
To see how much battery your product has left

Big power button
To easily turn on and off the product by tapping



Turning knob
Switching between modus Man (=manual), 0 (=off) and Auto (=automatic)

Turning knob
Increase and decrease power

Stop button with arrow
Use your foot to stop the vacuum cleaner. Arrow indicates where you have to kick

Green colour
Make buttons and knobs that user needs to use a colour that stands out and is contrasting with the rest of the product

Arrows
Cues that you can turn the handle

Figure 36. Use cues of both Makita (left) and Festool (right) industrial vacuum cleaners

6.1.2 Creative facilitation

Several creative sessions were organised for gathering information and generating ideas. The outcomes of each session are documented in Appendix N. One of these sessions was held with professionals from the stakeholder OnderhoudNL, focusing on the tools painters use. The activity showed which tools painters use most and which ones they find challenging to handle (see results in Figure 38). These insights inspired new functionalities for the robot, like carrying a ladder or having a tape holder.



Figure 37. Workshop with professionals from OnderhoudNL

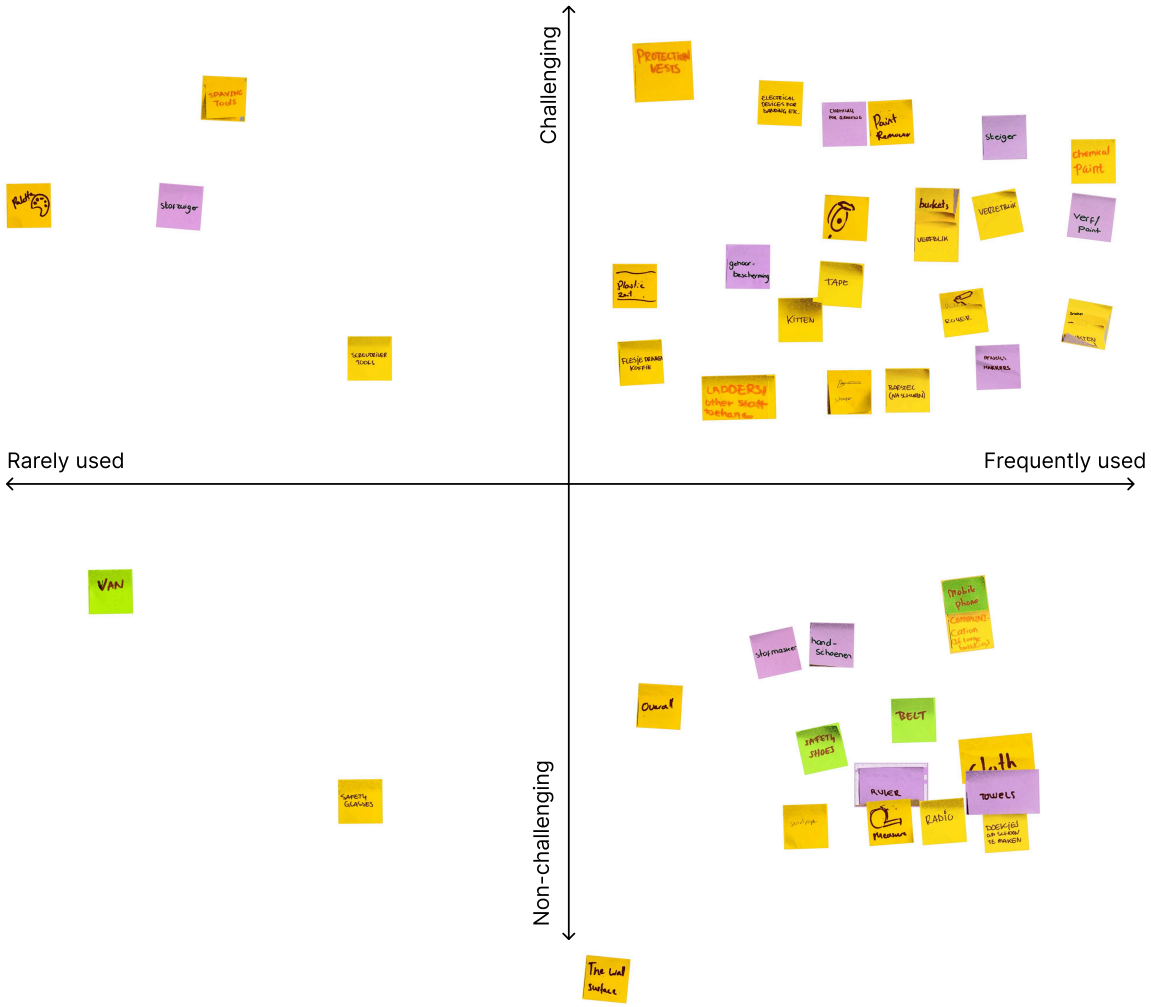

Frequent use, challenging

- (Chemical) paint
- Scaffolding
- Paint remover
- Chemicals for cleaning
- Electronic devices (e.g. for sanding)
- Protection vests (big and heavy)
- Buckets
- ”Verzetblik”
- Tape
- Chaulking gun
- Hearing protection
- Plastic sheets
- Brushes
- Roller
- Pencils / markers
- Brush (used after sanding)
- Scraper
- Drinking bottle / coffee cup
- Ladders

Frequent use, non-challenging

- Overall
- Dust mask
- Gloves
- Safety shoes
- Sandpaper
- Ruler
- Radio (playing music)
- Cloths for cleaning
- Mobile phone
- Communication device (for large buildings)

Figure 38. Workshop results OnderhoudNL

During the ideation phase, a creative session was also held with master's students and PhD students, as well as a workshop at the design agency Spark Design & Innovation (Figure 39). The interview insights were presented to them, and activities were done to generate ideas. After choosing their favourite ideas, participants made sketches of the best ideas and presented them to the group. The idea generation opened up new design directions and the final sketches helped with developing the concepts explained in Chapter 6.3.



Figure 39. Workshop with the Human-Robot Interaction Lab (left) and Spark (right)

6.1.3 Rapid prototyping

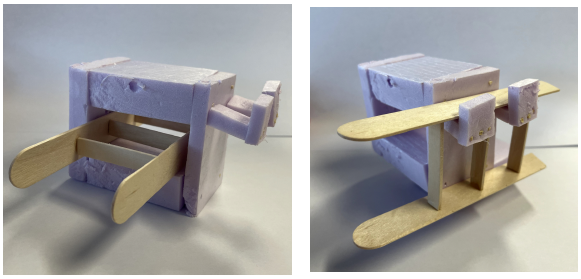

Figure 40. Different ways the robot could carry the ladder

Prototyping was used to explore the form and functionality of different mechanisms. While making the prototypes, new shapes and possible functionalities were discovered, such as different ways to carry a ladder (Figure 40). The "Spuugmodellen" are basic models that help understand functionality and mechanisms. Made from simple materials like paper, cardboard, and foam, these models are quick to create and help show ideas. Different lifting mechanisms were explored through prototyping, like a spiral lifting mechanism (Figure 41), an accordion lifting mechanism and scissor mechanisms (Figure 42).

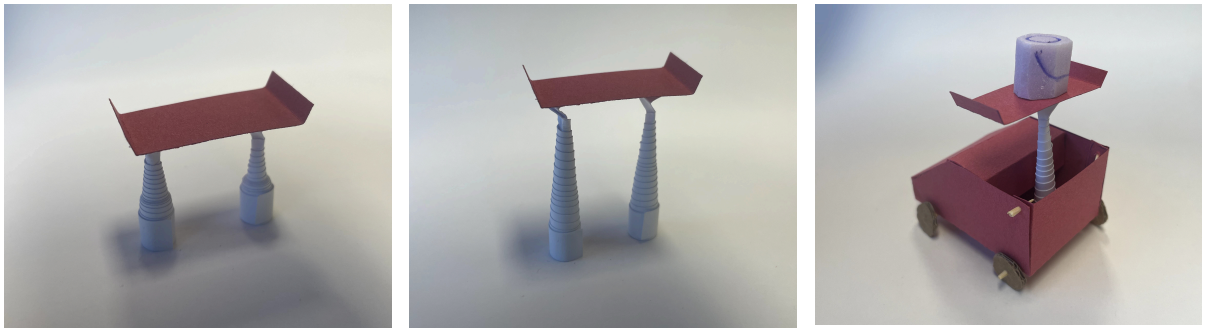

Figure 41. Spiral lifting mechanism

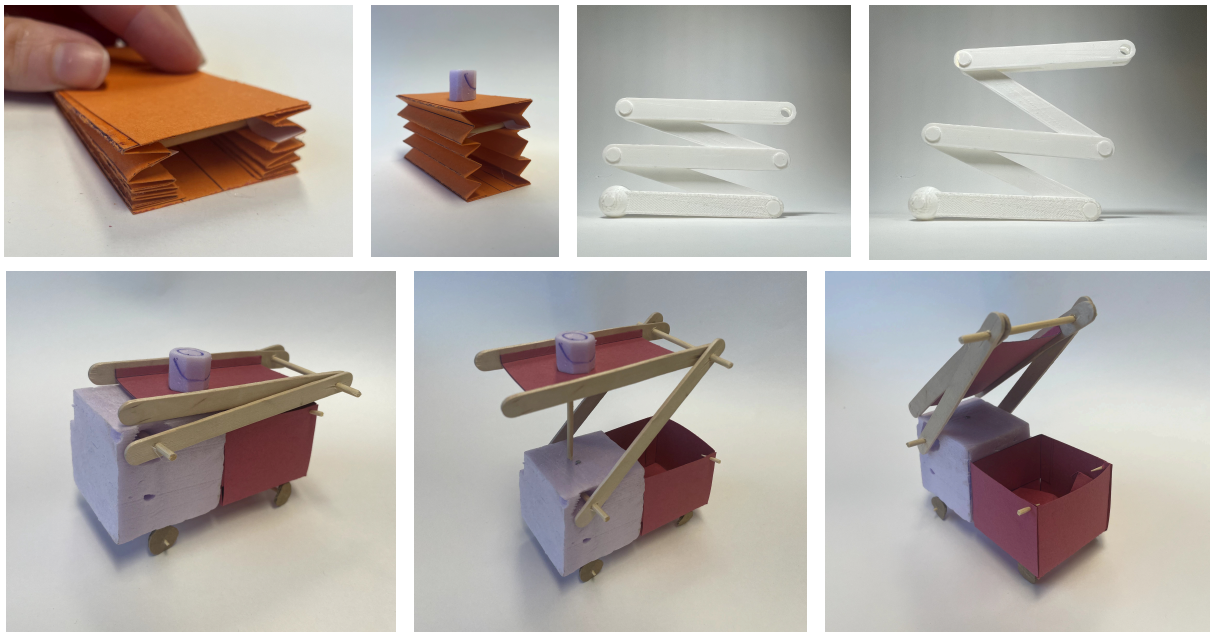

Figure 42. Accordion lifting mechanism and two scissor lift mechanisms

The shapes of the prototypes also inspired new functionalities, and the general shape of the concepts presented in Chapter 6.3. The prototypes also helped to think about modularity and parts that can be taken apart (Figure 43). Figure 44 shows prototypes of a stair robot with shelves to organise tools and carry big items like ladders.

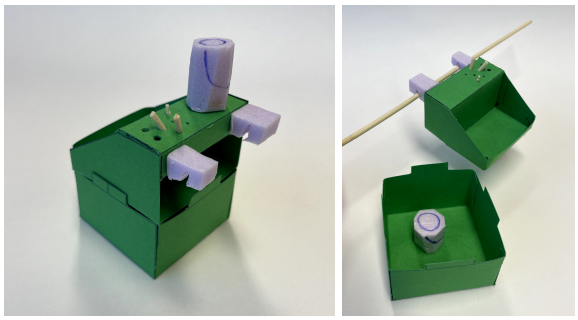

Figure 43. Modular prototype that can be hung on scaffolding with brush holder

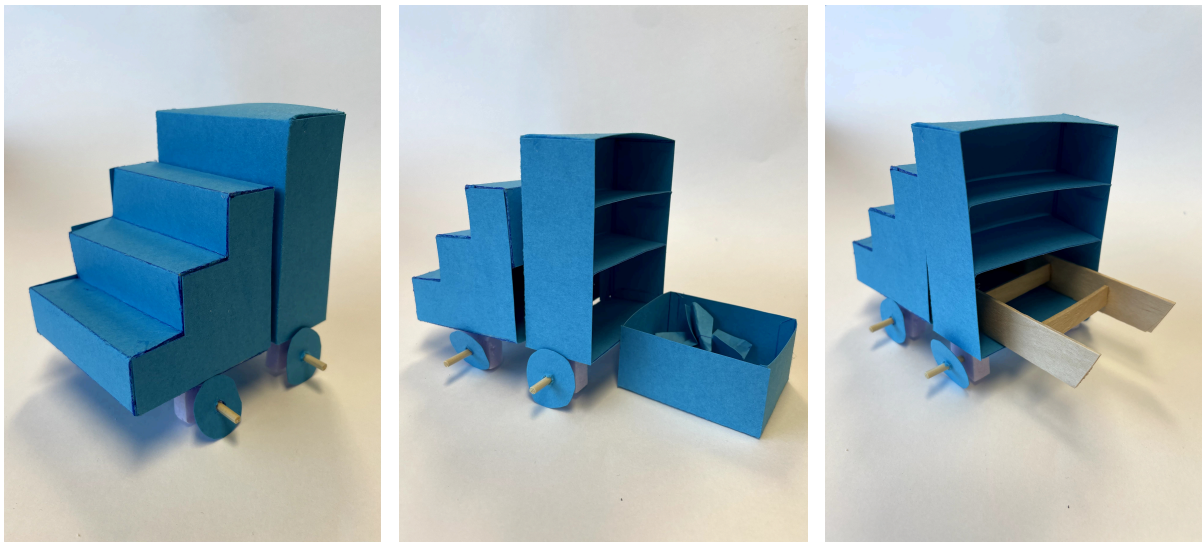

Figure 44. Stairs concept with shelves. It can both have a storage box (middle) and carry a ladder (right)

6.1.4 AI Visualisations

MidJourney was used to explore and develop the shapes for the robot concepts (Figure 45). This was done by combining reference images with a variety of text prompts to generate many different AI-generated visualisations. Once initial concept sketches were developed, these were reintroduced into MidJourney to create new shape variations. This approach generated many ideas quickly, and served as both inspiration for the embodiment of the concepts and inspired new functionalities, like alternative lifting mechanisms.

The AI-generated visuals for each concept were also shown to painters during interviews to gather feedback on which shapes they found most appealing and practical for their work environment. The images helped the participants better imagine how the robot might look like at the work site, making it easier for them to express their preferences. The generated images for all concepts can be found in Appendix O.

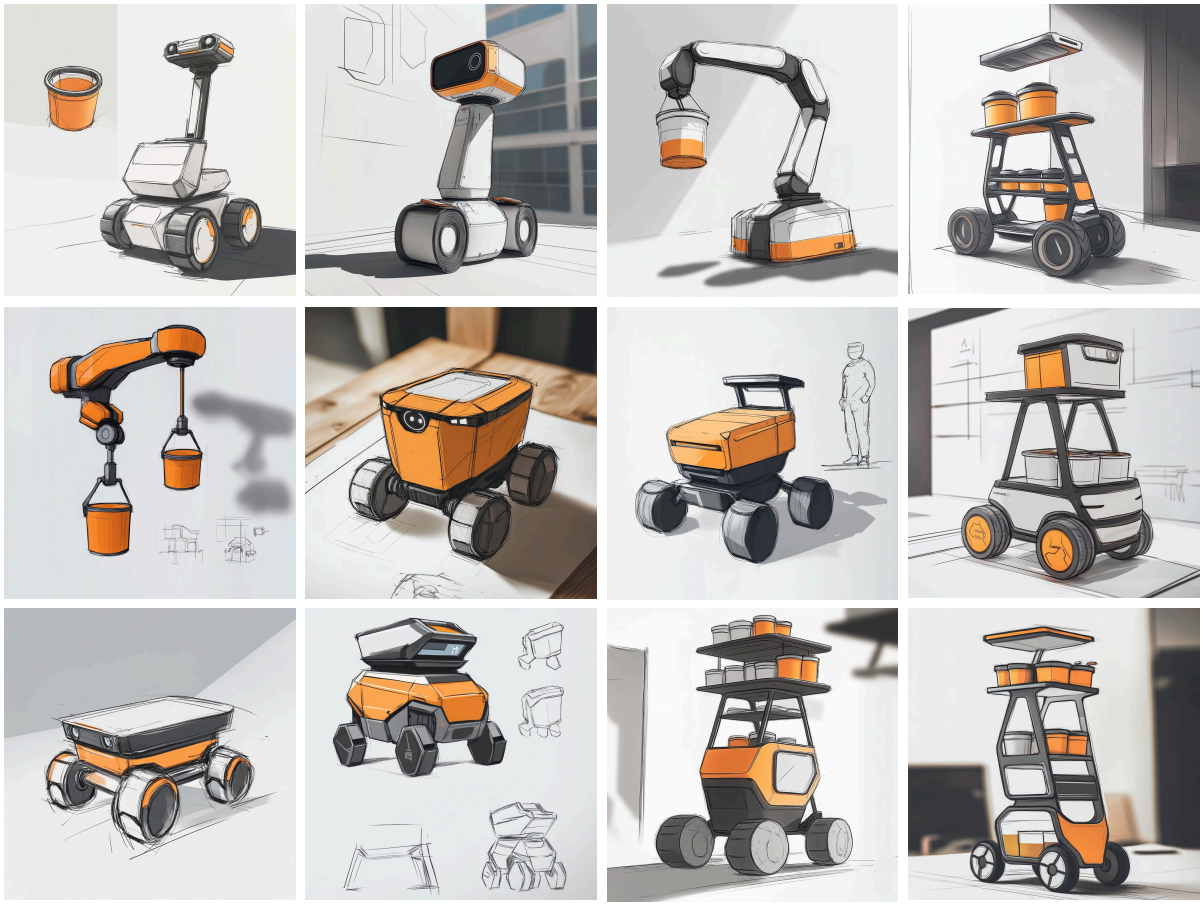

Figure 45. Generated images for form finding

6.2 CLUSTERING THE IDEAS

The techniques used for ideation resulted in a wide range of ideas, documented in Appendix P. To determine which ideas to develop further, the ideas were clustered based on common themes (Figure 46). These themes included cleaning, paint mixing and dispensing, multi-layered storage, attachment cherry picker, modularity, stairs, lifting, dehumidifying, and checking safety.

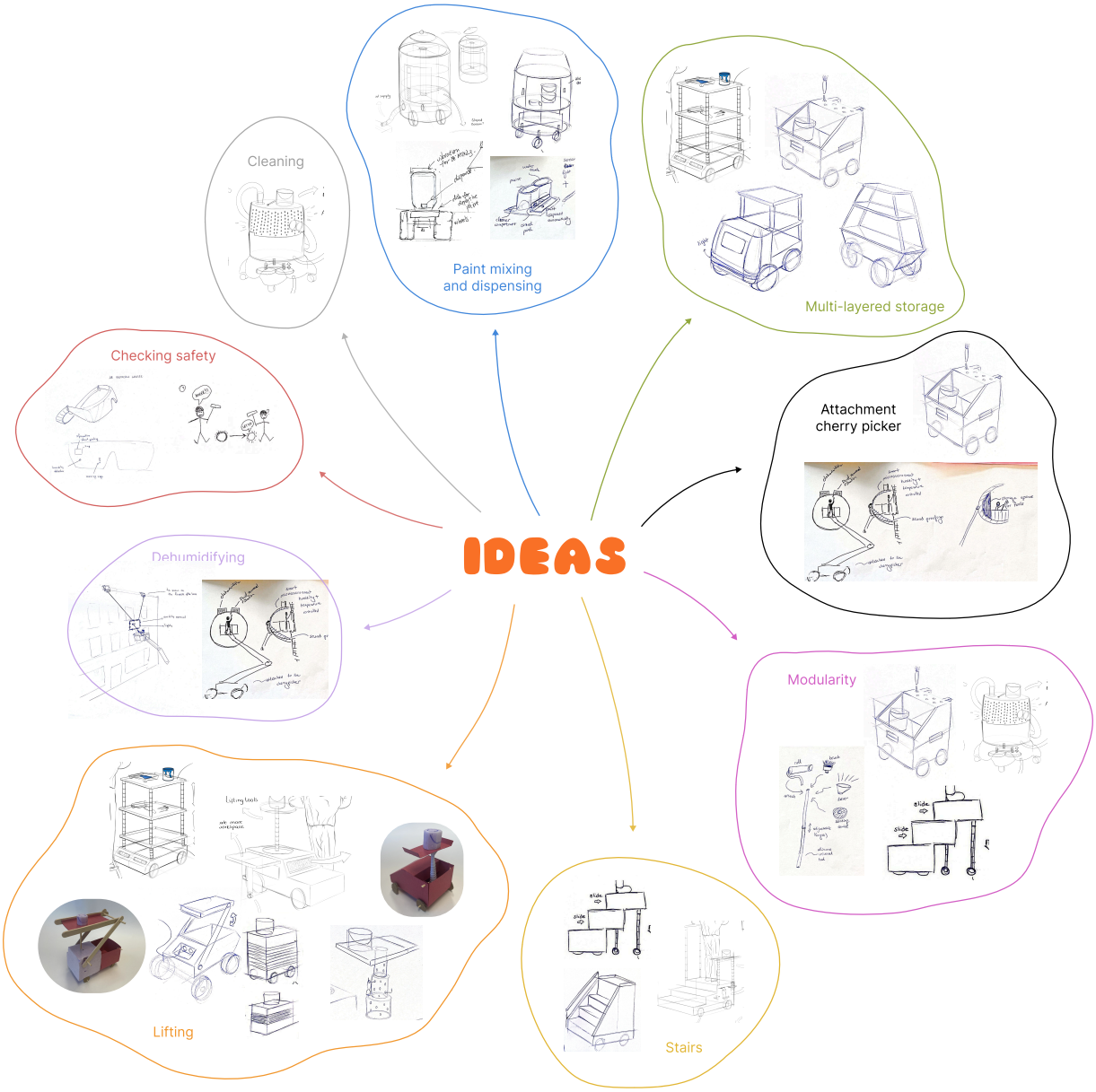

Figure 46. Clustering the ideas

6.2.1 Scoring the clusters

For evaluating the clusters, five criteria from the list of requirements from Chapter 5.2 were used. The overview of the evaluation is shown in Table 6.

1. Improving health and safety
The main goal of the design is to improve the health and safety of painters. If a cluster does not contribute to this goal, it receives a "-" and 0 points. For example, while dehumidifying ideas help painters manage wet surfaces, they do not improve safety or reduce physical effort. Similarly, clusters related to paint mixing and dispensing, modularity, and the attachment cherry picker do not significantly reduce workload or enhance safety. Clusters such as stairs, lifting, and checking safety score "++" (2 points) because they have a strong positive impact on improving safety and reducing physical strain.

2. Feasibility
To assist painters as quickly as possible by getting the product on the market, the concept also needs to be feasible. Large-scale ideas, such as dehumidifying, score "-" because they require complex systems that are difficult to implement. Checking safety also receives a "-", as it often involves new technologies like AI.

3. Originality
Regarding novelty and introducing something new to the context, the dehumidifier cluster scores "++" (2 points) because it introduces advanced technology to control the environment. Similarly, checking safety scores "++" for using smart tools to improve worker safety. On the other hand, clusters like cleaning, paint mixing, and multi-layered storage receive a "-" because they rely on existing solutions that painters are already using.

4. Can assist with variety of tasks
Clusters like dehumidifying, paint mixing and dispensing, and cleaning focus on only one type of task and receive a "-". If a cluster helps with more than one task, it receives a "+".

5. Can assist inside and outside
It would be an advantage if the robot could support painters both inside and outside. The dehumidifying cluster, which can only support painters outside, receives a "-". The attachment cherry picker cluster receives "++" because it can assist both inside, outside, and on the scaffolding.

Table 6. Evaluating the idea clusters

	Improves health and safety of painter (purpose)	Feasibility	Originality	Can assist with variety of tasks	Can assist inside and outside	Score
Dehumidifying	-	-	++	-	-	2
Paint mixing and dispensing	-	+	-	-	+	2
Multi-layered storage	+	+	-	+	+	4
Stairs	++	+	+	+	+	6
Lifting	++	+	+	+	+	6
Checking safety	++	-	++	+	+	6
Modularity	-	+	+	+	+	4
Cleaning	+	+	-	-	+	3
Attachment cherry picker	-	+	+	+	++	5

Final score

The next step is to create a concept family that represents the ideas from the best clusters. Based on the final scores, the dehumidifying and paint mixing and dispensing clusters were excluded, as they did not meet the criteria as well as the others. For the remaining clusters, some ideas were combined to form stronger concepts. For example, cleaning and modularity were merged into a concept called Duster. Similarly, stairs and multi-layered storage were combined into the concept Mobile Stairs. Clusters like the attachment cherry picker and checking safety were directly translated into concepts Safety Assistant and Attachment Scaffolding. These concepts and their functionalities will be explained in Chapter 6.3.

Personal take-aways ideation phase

During the ideation phase, I used many tools and methods to come up with out-of-the-box ideas to solve the challenges painters face. Especially using the perspectives of other students and designers gave me new fresh ideas that I had not come up with.

Looking at the existing tools helped me understand the design language of products that the user is already familiar is. This way, I can use some elements of these existing products to give the painters intuitive clues how they would interact with the robot. For example, I can use the high-contrast parts to inform that the users can interact with them.

Rapid prototyping was a useful tool to think about new shapes and functionalities of the robot. It was time-efficient tool; Making prototypes from paper and cardboard helped with quick iterations that were easy to adapt and manipulate. And it was a quick way of validating new mechanisms.

I also learned to work with generative AI software to create images. Besides inspiration on the embodiment of the robot, it unexpectedly gave me inspiration about new functionalities as well.

With so many ideas, the biggest challenge was narrowing them down. Clustering the ideas helped make sense of the variety. I then used some of the requirements to compare how effective the ideas for solving the real challenges in the workspace. But still, even the low scoring clusters had some potential. When I was merging the clusters, I decided to create a concept family that represents the most interesting clusters and their functionalities. This way, I can evaluate with the users what functionalities they like and don't like. This concept family is presented in Chapter 6.3 and the evaluation that was done with them in Chapter 6.4.

6.3 CONCEPTS

This chapter presents seven concepts representing the most promising ideas from the ideation phase. The goal is to gather feedback from painters on desirable features and functionalities and identify what might not work in their context. Along with sketches with annotations, AI-generated images were created to show different options for the shape. These images were also shown to painters to see if they had a strong preference for a particular design. All the AI images that were created can be found in Appendix O.

6.3.1 Concept 1: Duster

Duster is a industrial vacuum cleaner robot that can both collect dust and serves as a power supply for electric tools. It has a large storage compartment to transport big tools and materials. It can be customised with additional storage modules to transport even more.

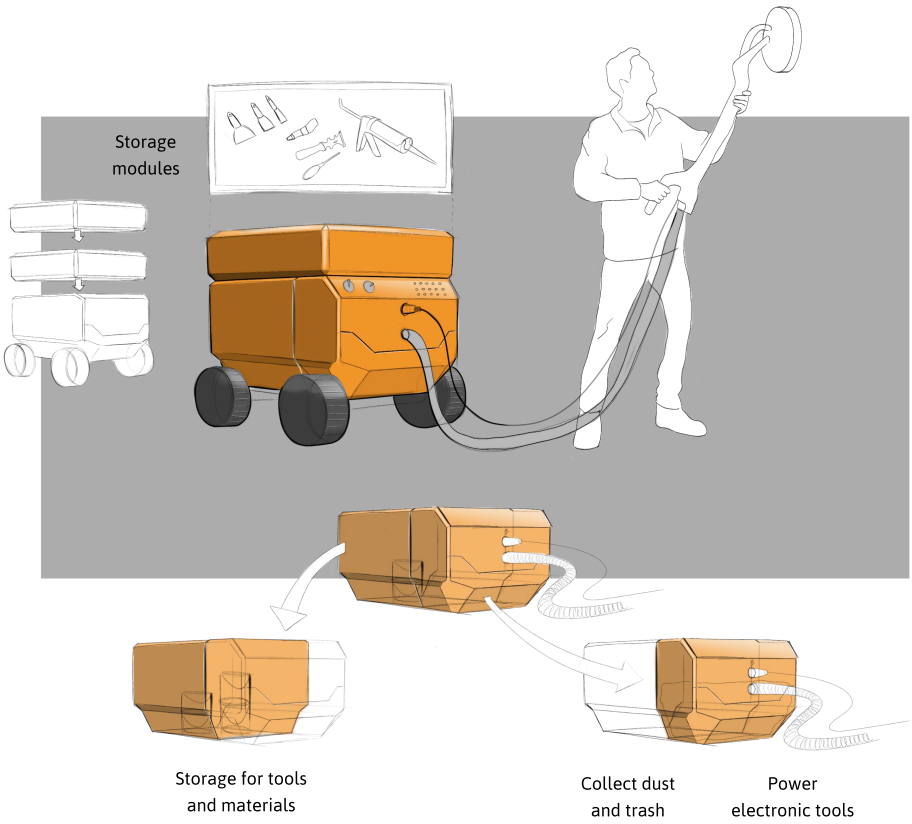



Figure 47. Duster and its AI visualisations

6.3.2 Concept 2: Mobile ladder

The concept “Mobile ladder” replaces traditional ladders and step ladders. It's has big and stable platforms to stand on to reach areas above shoulder height. It has a handrail for extra stability support and it has a lifting mechanism to raise paint buckets or materials to the preferred height to minimise the need for bending.

The omni wheels allows the painter to move along walls without having to climb down repeatedly to dip their brushes. The painter also doesn't have to climb down to move the ladder to the right position.

When the stairs are not necessary, the painter can stand in front of the robot and use the shelves to place their tools and materials at different heights. It also contains a large storage box for storing bigger tools.

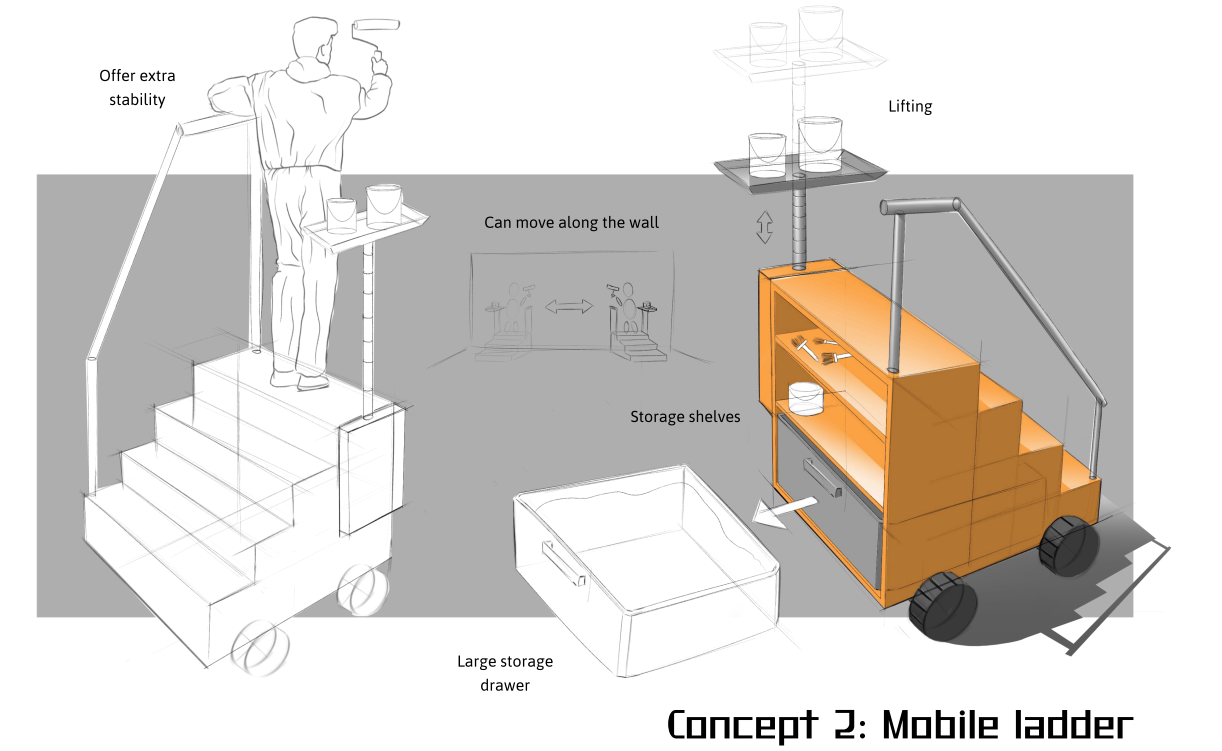



Figure 48. Mobile ladder and its AI visualisations

6.3.3 Concept 3: Scaffolding attachment

This robot consists of two parts, connected with latches. The top part can be clicked off the bottom part. It has hooks at the back so that it can be brought and hung onto the scaffolding. The top part of the robot also has a lifting platform to lift paint buckets and tools to preferred heights. The bottom part has a storage area for bigger tools. It can also be used for storing trash.

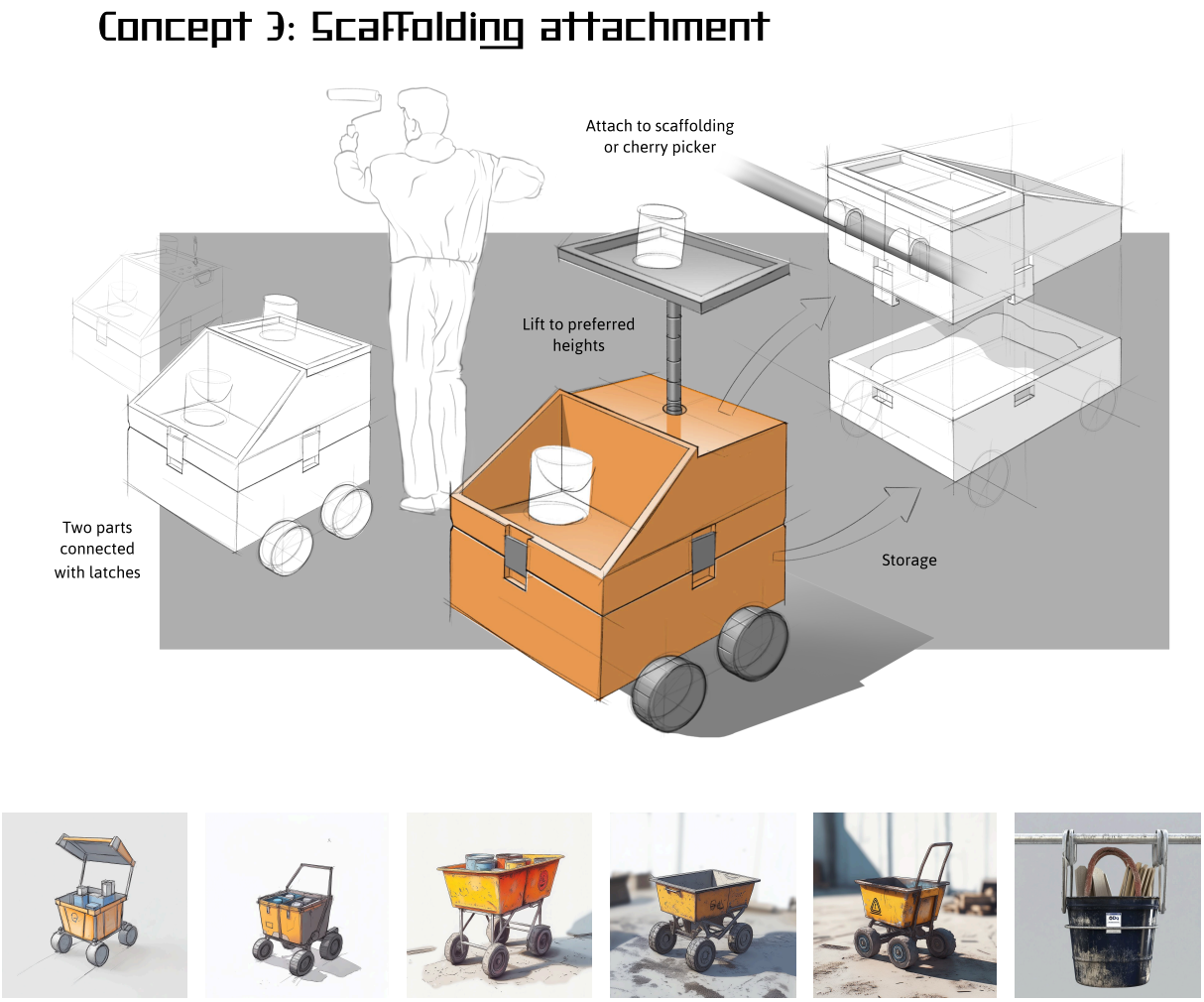

Figure 49. Scaffolding attachment and its AI visualisations

6.3.4 Concept 4: Lifter

The Lifter is a robot with three shelves that can be adjusted in height. The painter can decide at what height each platform has to be. This way, a painter can access their tools from the ladder without having the climb down.

The robot also has a built in construction light to light up the workspace, an extension pole holder, and hooks on the side to carry a ladder.

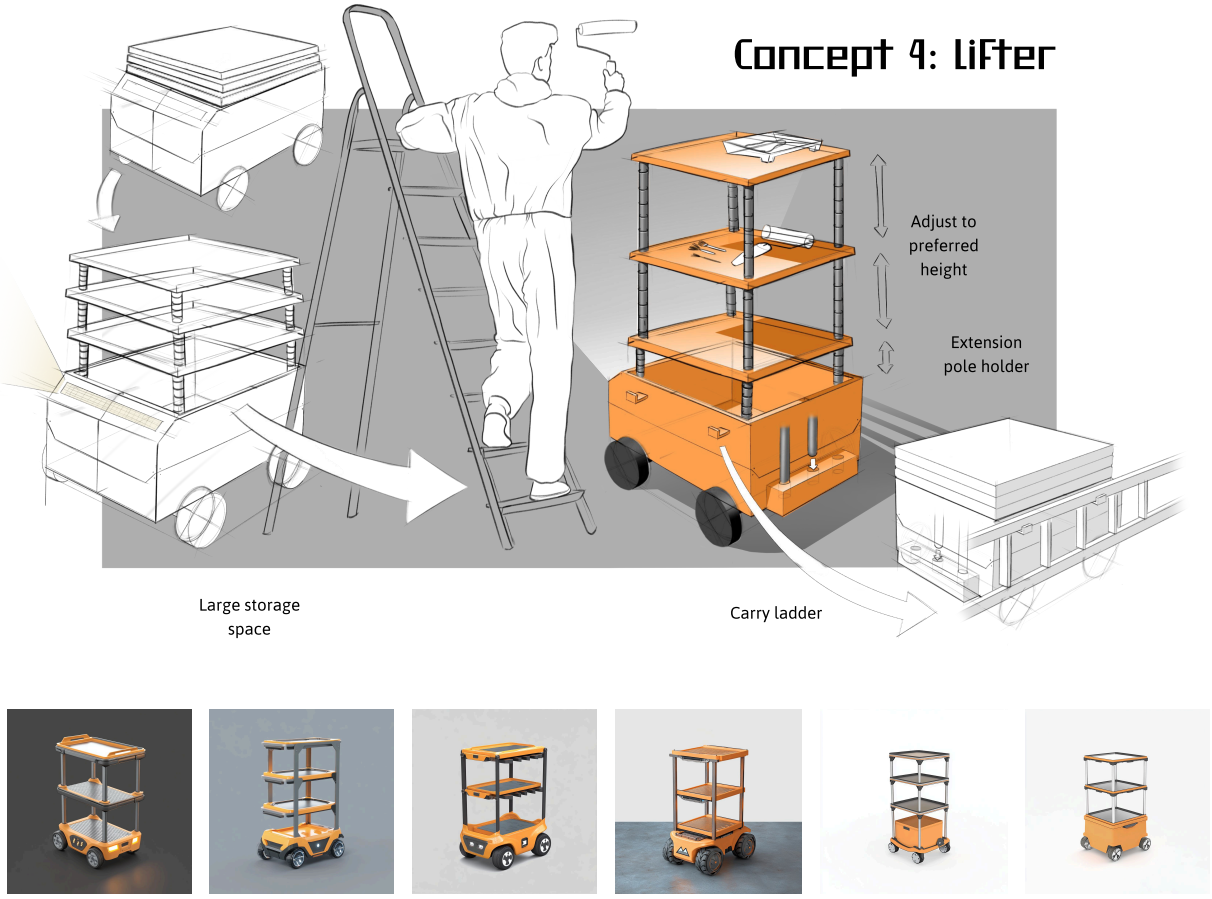

Figure 50. Lifter and its AI visualisations

6.3.5 Concept 5: Hooked

The concept Hooked also has a lifting mechanism that allows you to attach hooks at the ideal height to hang tools. This gives you easy access but also keeps tools organised and within reach during painting tasks.

It also has the functionality to charge batteries of your tools. It also has indication lights to show how much the battery has charged.

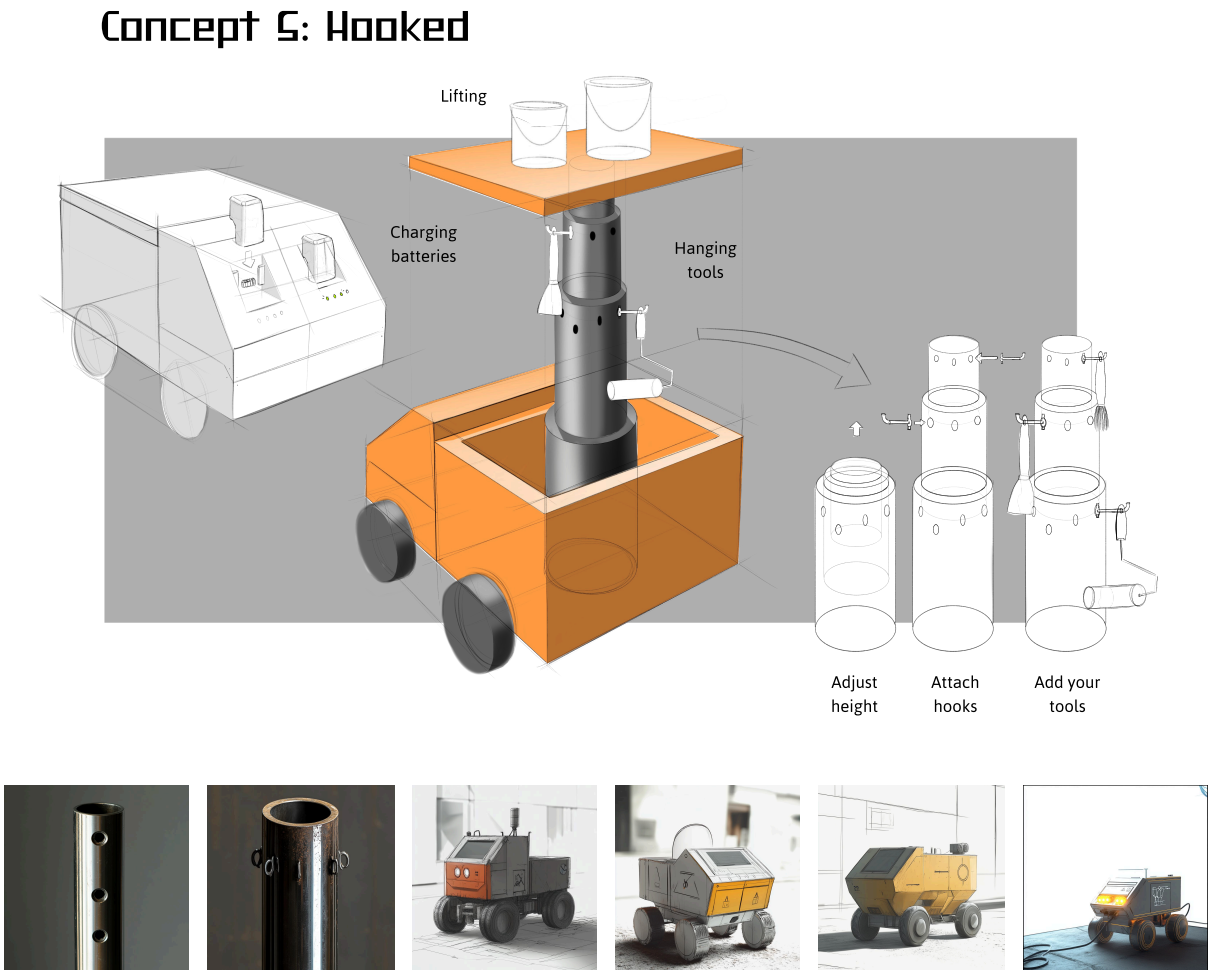

Figure 51. Hooked and its AI visualisations

6.3.6 Concept 6: Safety assistant

This concept is a safety assistant to ensure the well-being of painters.

It continuously scans the surroundings and provides real-time alerts, such as warnings when stepping backward near a hole or if there is a paint bucket in your path that could cause a trip.

The robot also observes postures and gives advice when someone has been standing in a bad posture for too long.

To enhance communication, it has a live translation feature, enabling workers who speak different languages to understand each other more effectively, improving safety and collaboration on the job site.

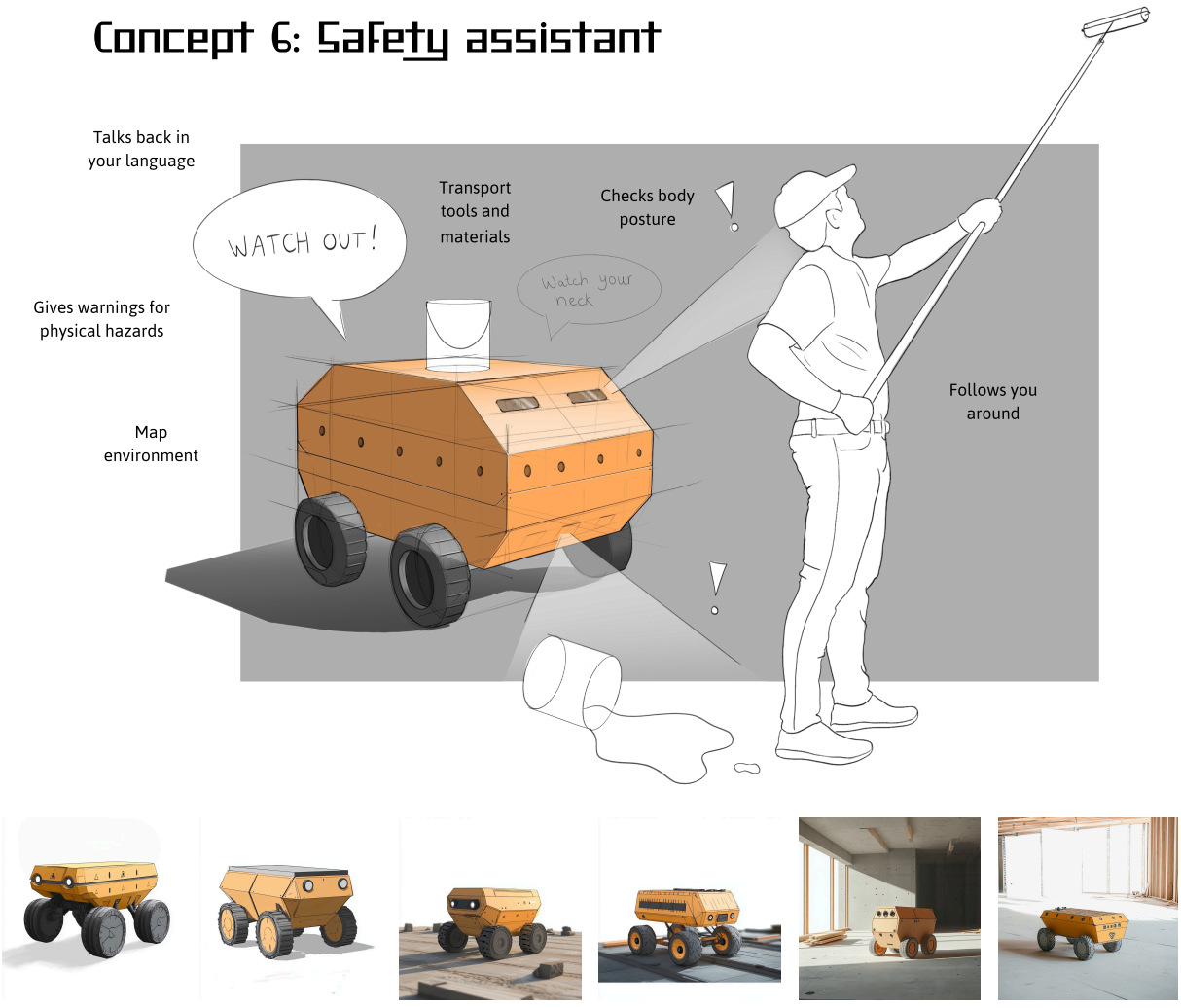

Figure 52. Safety assistant and its AI visualisations

6.3.7 Concept 7: Digit

The robot Digit assists with work preparation.

It can make a 3D scan of the worksite and provide an estimate of the amount of material required.

It has a interactive display that shows the material needed, as well as tracking the progress of the work. It can also show tips and advice on the display.

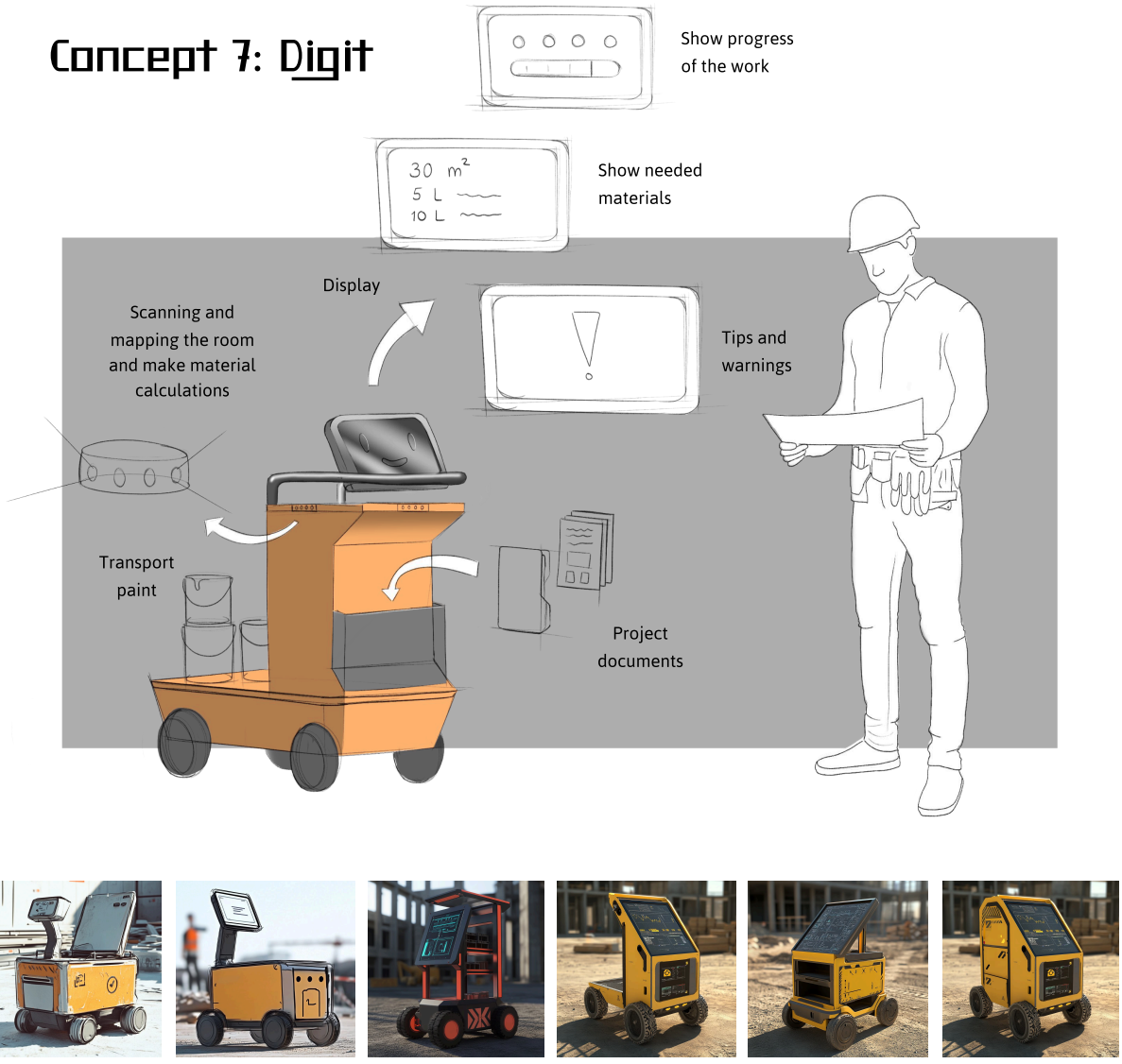

Figure 53. Digit and its AI visualisations

6.4 CONCEPT EVALUATION

The seven concepts were evaluated through two interviews: one conducted in the residential context and the other in an industrial context. The goal of these evaluations was to find out the robot's desired functionalities for each setting. During the interviews, participants were asked to review and rank the seven concepts introduced in Chapter 6.3. By discussing their preferences and reasoning, it became clear which concepts and functionalities align best with the needs of each context, and which are less suitable.

Chapters 6.4.1 and 6.4.2 explain the results of the evaluation for the residential context, including the concept rankings and preferred functionalities. Chapters 6.4.3 and 6.4.4 cover the same for the industrial context.

6.4.1 Concept evaluation with residential context

Participants

The concept evaluation for the residential context were performed with the following participants from the residential context:

- Younger painter (aged 25-54)
- Project leader

Both participants work for the same painting company and have been involved in previous interviews for the contextual research described in Chapter 4.

Tools and equipment

For the concept evaluation, the following materials were needed:

1. Consent forms
2. Printed A4's of all concepts
3. Printed A4's with AI visualisations of all concepts
4. Blue (+2 points), yellow (+1 points) and orange (x) dots (stickers)
    - ~10 dots per colour per participant
5. Pen
6. Paper
7. Phone for audio recording and taking pictures of results

Procedure

The interview began with an update of the project and explaining the purpose of the upcoming activity. The participants were informed about the data collection and of their rights through an informed consent form. The signed informed consent were securely stored after the interview.

When everything was clear to the participants, the researcher began the audio recording and started the concept evaluation activity.

First, the seven concepts and their functionalities were explained. The participants were able to ask questions until all concepts and their functionalities were clear. The participants were then asked to evaluate the concepts with stickers (Figure 54). The orange sticker meant they do not believe in (parts of) the concept and that the concept will not work for their context. The concepts that are most interesting are given a blue sticker. Concepts with yellow stickers they find (parts) of the concept interesting. As participants were placing the stickers, the researcher asked them to reflect on their choices and explain why they think certain (elements of) concepts are suitable, or not suitable, for their specific work environment.

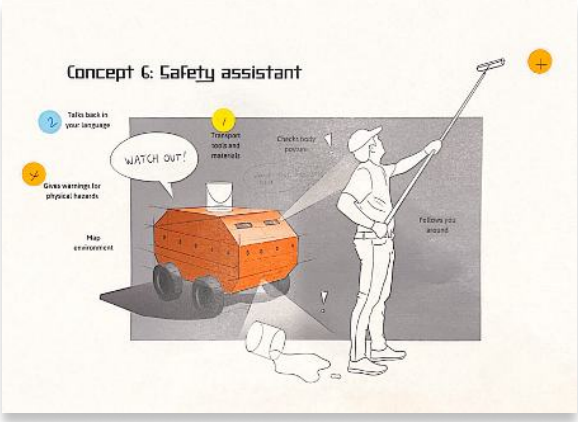

2 2 points - Super interesting for our context, I love it

1 1 point - Interesting for our context, I like it

X -1 point - This is not going to work in our context

Figure 54. Evaluating the concepts with stickers

Results

After the evaluation, the scores were calculated and the concepts were ranked (Table 7). If the total score was the same, the concept was ranked lower if it had more orange stickers.

Overall, the concept Lifter was viewed as the best concept for the residential context. The participants liked that the robot to carry the heavy materials, like ladders, doors and glass. The robot could lower the physical workload by carrying the tools from the storage container, following the painter towards the job site and then going up in the construction lift where the painter can take the materials from the robot. They also liked some other functionalities from other concepts like charging batteries, hanging up tools, hanging a storage box on the scaffolding, translating conversations within the team and tenants. In the Chapter 6.4.2, the functionalities the participants liked and the concerns they had with them are summarised for all concepts, ranked from best to worst.

Table 7. Concept scores residential context

Results residential context

	Number of blue stickers *+2 points each*	**Number of yellow stickers** *+1 point each*	**Number of orange stickers** *-1 point each*	**Total score**
1. Lifter	2	3	0	**= 7**
2A. Scaffolding attachment	1	0	0	**= 2**
2B. Mobile ladder	1	0	0	**= 2**
4. Hooked	1	0	1	**= 1**
5. Safety assistant	1	1	2	**= 1**
6. Duster	0	0	1	**= -1**
7. Digit	0	1	2	**= -1**

6.4.2 Residential context ranking

1. Lifter

The lifter was by far the most preferred concept in the residential context, with 7 points. With a few added functionalities from other concepts, they would be happy to let this robot help them in the work.

'Overall, I think this is a good concept' - Project leader

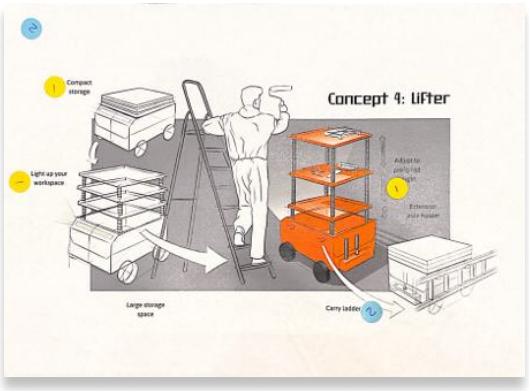

Figure 55. Lifter (7 points)

Carry heavy materials

The robot could help with carrying heavy materials and tools like doors, glass, iron and ladders from the container to the construction lift.

'I would like the robot to carry my heavy stuff' - Younger painter

'But even if the robot is not allowed on the scaffolding, it would already be useful for the walking from the container to the construction lift. It still makes a difference. You know, those doors are really as heavy as a human being.' - Younger painter

Go up in the construction lift

Painters would find it ideal if the robot could fit inside a construction lift and transport materials directly to the right scaffolding level. This would eliminate the need to hoist heavy materials into the lift and then unload them again.

'Possibly the robot could also drive into the lift so you could take the material off at the top of the scaffolding. If the robot could do that itself, that would be totally ideal.' - Younger painter

Bringing coffee to the scaffolding
Painters really like coffee and their coffee breaks. They would love to have the robot have a built-in coffee machine or bring them coffee to the scaffolding.

'We have coffee breaks on the scaffolding. You often see many people going back to the break room anyway, but that is inefficient. The best thing would be to have a coffee machine on the scaffolding.' - Project leader

Storing materials away in the container, at the end of the day and also during breaks
The painters would like the robot to store away their tools and materials in the storage container when they are not working. This way, their tools and materials are not lying around the scaffolding, but are safely secured at the end of the work day and during breaks.

'What would be nice is that materials are also returned to the container, that they are not left lying around on the scaffolding. That way we don't lose our stuff either. For example, during the break, he drives behind the painter and stores the things safely and then goes back to the location where you left off 5 minutes before the break is over.' - Project leader

Construction light to light up the workspace
They would like the robot to have a construction light for extra light during the dark hours of the day.

'So if the robot cart has a sturdy battery for an extra power source, a construction light to light up the workspace, and space to carry stuff. And if it can also carry a door, that's totally ideal.' - Project leader

Multi-terrain robot
The painter is concerned about the many obstacles the robot would have to face if it were to follow them everywhere. It should be suitable for rough and different types of terrain, or even overcome obstacles like fences and gardens.

'If something really needs to follow you in all the work then you really need a spider or drone. You often have to go into gardens, sometimes climb over fences, which can be tricky with wheels. Actually, it should have wings if it wants to follow us everywhere.' - Younger painter

2A. Scaffolding attachment

The scaffolding attachment (Figure 56) is interesting for storage on the scaffolding and to keep the tools and materials organised.



Figure 56. Scaffolding attachment (2 points)

Storage on the scaffolding

They would like to use this robot for storing their tools and materials on the scaffolding itself. The painters do have significantly less tools and materials than for example carpenters. Now they often bring a bucket with all the tools and materials they need for the day. Carpenters would even bring a wheelbarrow onto the scaffolding to carry around their materials.

'I would find this interesting as storage for on the scaffolding, with a side note that it is especially useful for carpenters.' - Younger painter

Hang it inside the scaffolding

It is not allowed to hang the top part of the robot on the outside of the scaffolding, because of the risk of falling objects on people that are walking below the scaffolding.

'The scaffolding is sturdy enough to hang such a box onto it. Especially if it hangs on the inside of the scaffolding, which is better anyway. It is not allowed on the outside because of the danger of falling objects. If people walk underneath, nothing should be able to fall.' - Project leader

Mobile workstation

They would like the robot cart to be like a mobile workstation to organise and store all your tools and materials. It would be useful for the painters, and also for carpenters.

'They [carpenters] have a greater need for a workbench or workspace than painters. Painters do too, but carpenters need it more.' - Younger painter

'Maybe you could make it bigger and set it up as a mobile workstation, with compartments for your tools, such as a hammer or saw.' - Younger painter

2B. Mobile ladder

The painters find the Mobile ladder mostly useful for inside contexts. If the painters would be able to use it on scaffolding, they would. But currently regular ladders on scaffolding is prohibited by law. There is a high chance it would also not be safe for the workers to use this robot on the scaffolding.

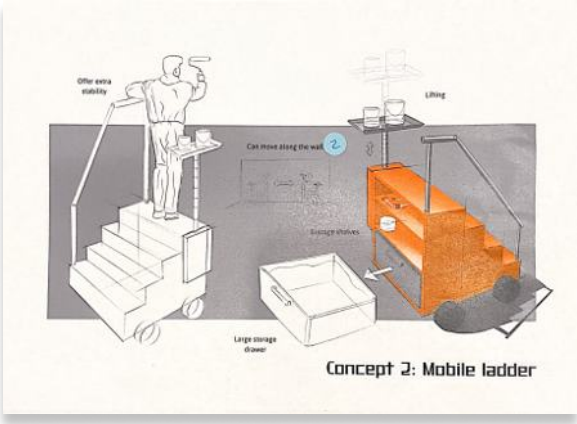

Figure 57. Mobile ladder (2 points)

Especially useful for inside

They could use the ladder in some cases, but often the ground surface is obstructed with gardens or backyards, making it even difficult to use the ladder on the ground floor. However, they do think it will be useful for working inside.

'Especially for indoor use, it is useful. The height seems to be just right for that. You can easily reach the edges and the ceiling.' - Project leader

Concern: Step ladder on scaffolding

They would like to use the ladder on the scaffolding to reach hard to reach areas. However, by law it's currently not allowed to bring a ladder onto the scaffolding, because of the risk of falling off the scaffolding. If it would be allowed, it would be very useful for painters if they could step on the ladder for reaching high areas.

'Legally, you are not allowed to use a stepladder on scaffolding. This is not permitted due to the risk of falling off the scaffolding.' - Project leader

'It would be great if could stand on the robot as a stepladder and it's legally allowed on the scaffolding.' - Younger painter

Suggestion: Adjustable stair height

Painters would like some more flexibility by adjusting the height of the mobile ladder. This would help avoid situations where they have to stand on their toes.

'It would also be useful if the height of the ladder was adjustable. It would be nice to have a margin and be able to adjust the height a little more. - Younger painter

Storing tools in storage box
Besides flat surfaces, a storage box is also helpful for painters to put in bigger tools.

'Yes, a storage box would be useful too. Think of a drawer for your bigger tools or a place to put brushes, paint pots and cloths.' - Younger painter

4. Hooked

This charging batteries functionality was liked by the participants. However, they did have concerns about knocking the paint bucket from the platform.

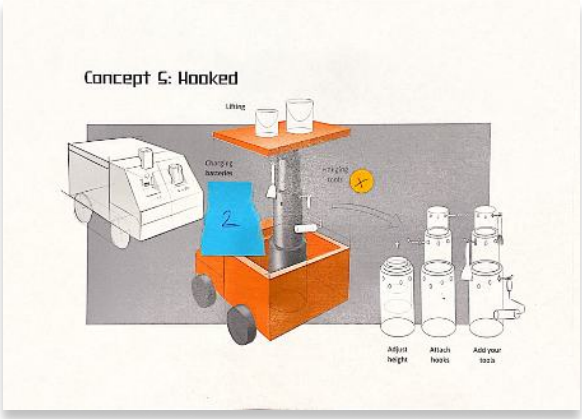

Figure 58. Hooked (1 point)

Charging batteries
'We don't use that many machines either. For me, it's usually just a lamp in the morning and occasionally a sanding machine. It's really not that much. But carpenters use batteries a lot more.' - Younger painter

Hanging tools
'So you could combine the hooks for hanging tools and the charging of batteries from this model with the lifter concept. That could be a good combination.' - Project leader

Concern: Knocking paint bucket from lifting platform
'I'm used to holding my paint can in one hand and my brush in the other. If I put my stuff down somewhere, I actually run a higher risk of knocking it off with my elbow.' - Younger painter

5. Safety assistant

The concept safety assistant both had some positive and negative elements according to the participants. They liked the translation tool; they could use it to translate within teams and with tenants. However, the painter doubted that he and other painters would listen to the posture advice if the robot would give them it.

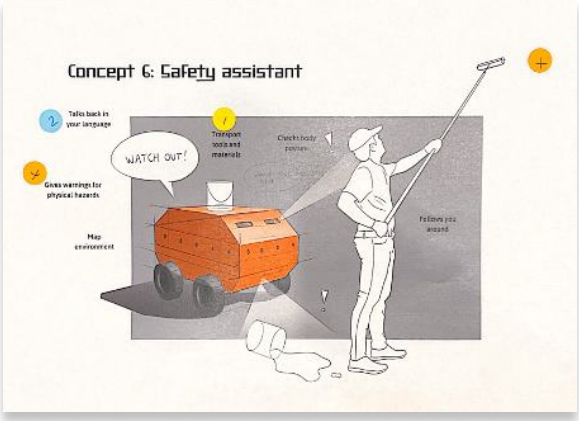

Figure 59. Safety assistant (1 point)

Translate between workers
'If you have all the languages included, that would be very useful. You could also hire more people who don't speak the language. Think of Polish, Bulgarian, and Turkish for the staff, and Arabic for the residents.' - Younger painter

Translate conversations with tenants
'The women are often at home but do not always speak good Dutch. If you want to explain that a window has to be opened for a moment, that often causes miscommunication.' - Project leader

Concern: Listening to advice about bad posture
'The idea that there is something monitoring my posture seems interesting. But whether I would actually listen to it is another question. Having such a robot beside you for 40 hours a week might feel more like a burden. It feels like some kind of police officer.' - Younger painter

6. Duster

Some demands became clear when discussing the concept Duster. Like the need for a lot of storage space, and the concern of overcoming the obstacles on the scaffolding.

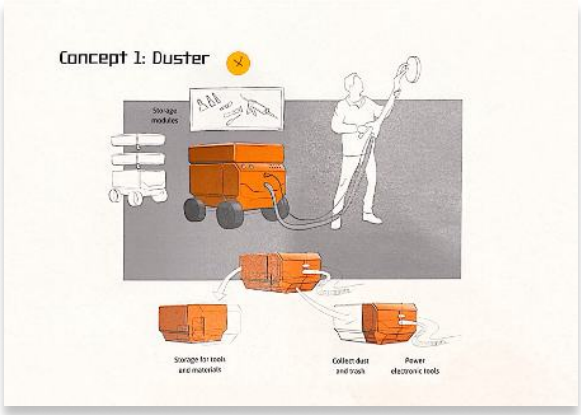

Figure 60. Duster (-1 point)

A lot of storage space
'The further away you are from the storage container, the more convenient it is to be able to take a lot with you.' - Younger painter

Suggestion: Blower instead of a vacuum
'For example, if you use a blower... Suppose you reverse the function? That it becomes a blower instead of a vacuum?' - Project leader

Concern: It needs to overcome the uneven flooring on the scaffolding
'The planks are sometimes overlapping, or there are height differences between them. This means the robot must be able to handle small bumps. These height differences can range from 2 to 3 centimetres, sometimes even more. It needs to be able to manage that.' - Younger painter

7. Digit

The project leader liked the functionality to digitalise the work progress. However, there is no need for scanning the room to determine the required materials, because there is already an existing solution for it in the residential context.

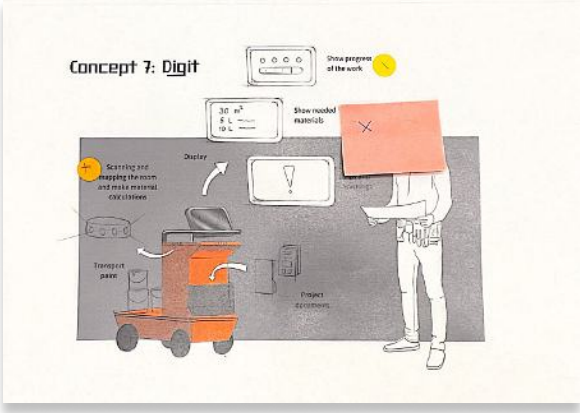

Figure 61. Digit (-1 point)

Digitalise work progress
'I want to get a digital overview of how far the work is coming along' - Project leader

'If you have a smart camera that knows what tasks are being performed, and can calculate what has been done and what still needs to be done, then you will likely be dealing with AI.' - Younger painter

Mapping environment and determining materials is already accurate
'For scanning, we collaborate with a external partner. (...) The harness is used to walk through homes, stopping every few meters to ensure all corners are scanned properly. In the end, you get a Google Maps-like environment of the house, including photos. They can also create drawings from that data. For outdoor scanning, a tripod is used to capture the buildings even more accurately than with the harness.' - Project leader

6.4.3 Concept evaluation with industrial context

The same evaluation method as described in 6.4.1 was performed with participants from the industrial context. In this evaluation, the seven concepts were presented to the following participants:

- Younger painter (aged 25-54)
- Two older foreman painters (both aged 55-64)
- Project leader
- Safety responsible
- Executor

Results

For the industrial context, Digit, Safety Assistant and the Scaffolding attachment score significantly higher than the other concepts (Table 8).

Table 8. Concept scores industrial context

Results industrial context

	Number of blue stickers *+2 points each*	**Number of yellow stickers** *+1 point each*	**Number of orange stickers** *-1 points each*	**Total score**
1. Digit	6	6	0	**= 18**
2. Safety assistant	5	2	0	**= 12**
3. Scaffolding attachment	5	1	0	**= 11**
4. Lifter	1	3	0	**= 5**
5. Mobile ladder	1	3	6	**= -1**
6. Hooked	0	1	6	**= -5**
7. Duster	0	0	6	**= -6**

Overall, the results show that the painters in the industrial context are looking for something compact and flexible to overcome the many obstacles they encounter in their work. Besides helping on the work site itself, the robot could play a major role in preparations and safety monitoring. It could help with monitoring the heat and detecting leakages, and make a 3D map of the area to get a better indication of the needed materials.

In the Chapter 6.4.4, the functionalities the workers liked and the concerns they had are summarised for all concepts, ranked from best to worst.

6.4.4 Industrial context ranking

1. Digit

Painters want to use Digit mainly for detecting leakages so people don't have to go in the dangerous areas to detect the leak, and for getting more accurate material estimations.

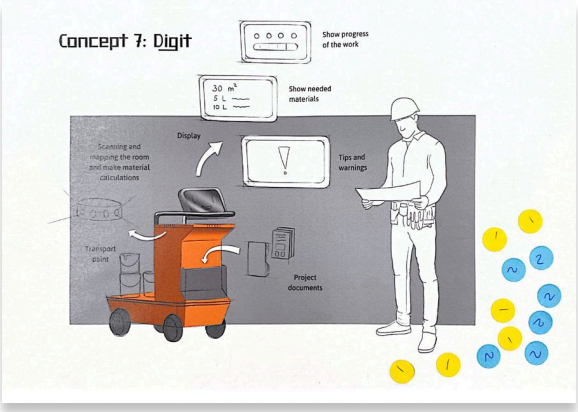

Figure 62. Digit scores the highest points for the industrial context (18 points)

Identify and visualise location of leakages

When a gas meter detects a dangerously high concentration of gas, workers must stop working and evacuate the area. Typically, someone then needs to enter the area and manually scan for the leak. A robot could perform this task instead, but it must be ATEX-certified to prevent explosion risks.

'It could show a 3D image and show exactly where the leakages are. (...) This is convenient because I think it is dangerous for the people who have to go inside to find the leaks.' - Younger painter

Mapping worksite to get better material indication
The robot could assist in scanning the worksites to getter a more accurate indication of how many materials are needed.

'What happens now is that everything is based on the isometrics. In practice, everything is always bigger or smaller. (...) The robot could help with the precise calculations.' - Project manager

2. Safety assistant

Painters want to use the Safety Assistant as a translator and to receive warnings about bad posture, excessive heat, and physical hazards below eye level. However, they are concerned that the robot might monitor their activities and report them to management.

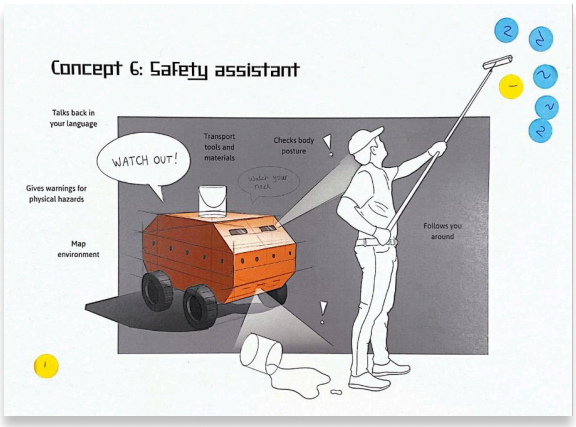

Figure 63. Safety Assistant (12 points)

Warnings physical hazards
The painters would like the robot to scan and warn them for physical hazards that they cannot see themselves. It also shouldn't be annoying.

'It doesn't need to scan what you see yourself. But everything below your eye-level, it continuously checks for you.' - Executor

Live translator
The robot could significantly improve team communication by providing live translations during (safety) briefings and translating warnings. This also makes it easier for project leaders to plan teams, as it's not necessary for everyone to speak the same language anymore.

'You tell your team what needs to be executed. The robot translates live what the foreman says to the two Romanian guys in the team.' - Executor

Monitor heat
The robot can be used for continuous heat measurements. The project leader wants the warnings to be sent to the safety team to decide on measurements.

'If the robot could measure the temperature continuously, it could identify earlier it is too hot in the workplace and the team needs to stop working or take measures.' - Safety responsible

Posture checker
The painters would like the robot to give them advice when standing in bad positions for too long and to take rests. However, since they cannot always avoid uncomfortable positions, the advice should be supportive and not intrusive.

'If the robot can monitor how long you stand a certain position and then advise you to take a rest, you do pay more attention to your health.' - Executor

3. Scaffolding attachment

The scaffolding attachment is useful for workers because it can be used directly on the scaffolding, where they do most of their work. They like the idea of using it as a storage box so they don't have to carry their tools and materials up and down during breaks or at the end of the day.

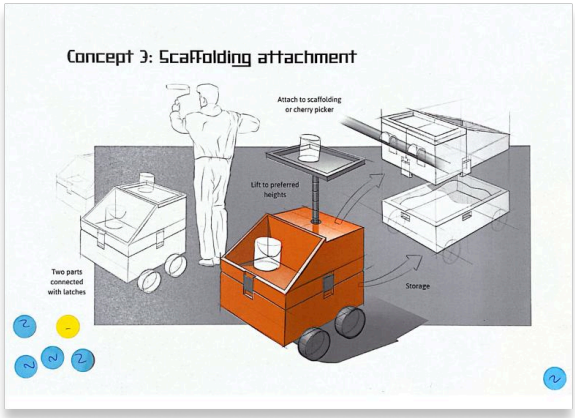

Figure 64. Scaffolding Attachment (11 points)

Lifting
The lifting platform could be useful to the painters because it prevents them from bending down.

'You could then put the robot's plate at a height that you don't have to bend down.' - Safety responsible

Storage space on scaffolding
The painters are specifically interested in this concept, because of the possibility to store your tools and materials on the scaffolding at the work site itself. If it would have a lock, it serves as a safe to prevent tools being taken by other teams. It also helps with keeping the work site itself clean and get rid of trip hazards. It's important that the scaffolding attachment is stable and securely fastened to prevent it from swinging, which could pose a safety risk if items fall.

'It does come in handy if you can hang it up [on the scaffolding] and store your tools and materials in here at the workspace. Then you don't have carry everything up and down every time. You should be able to lock it.' - Painter

'You also do often see masks left at the storage area. For preventing falling objects, I see the potential.' - Safety responsible

Drip tray
The plate of the lifting platform should also be a drip tray that collects paint spills. It could also help securing a paint bucket so it doesn't fall over.

'We often place paint buckets on scaffolding and it happens quite regularly that something falls over. That also creates environmental pollution. The robot could serve as a drip tray, so that the paint is collected.' - Project leader

4. Lifter

The workers are quite positive about the lifter for assisting with ground work. However, most work is done on scaffolding, so the robot could not be used for every situation. They also liked that it could act a personal storage box that they can use to carry their tools and materials to the workspace.

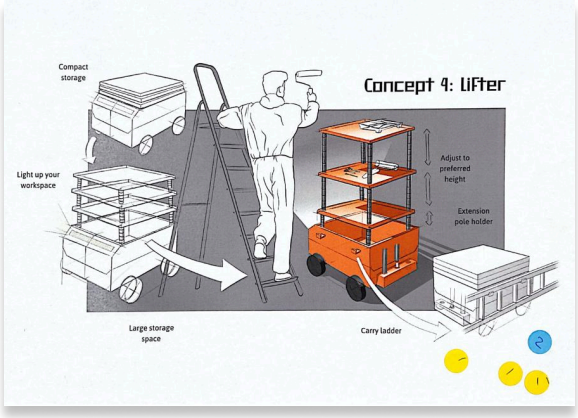

Figure 65. Lifter (5 points)

Could be used for work from the ground
'Yes for maintenance jobs it might work. Then it's for the small fix dings on the ground floor. A robot you can follow with all your materials.' - Executor

Personal toolbox assistant
'You go to your workplace and the robot follows you, and when you walk back in the evening it drives out of the factory with you and then it goes to the charging station. Then it's your personal trolley, your toolbox that goes up and down with you.' - Executor

'Then you also don't have to pass by the warehouse to collect everything all your tools. Then everyone will have their own stuff.' - Younger painter

Concern: Light will be difficult to position so that the painter doesn't stand in front of the light
'On the ground, you should then position the robot so that you do not stand in your own light.' - Executor

5. Mobile ladder

There were many concerns for the concept Mobile Ladder (Figure 66). The main concern is that the robot is too big and cannot fit inside the workspace. They also said this robot would only work on a smooth, non-obstructed floor, which is uncommon in the industrial context.

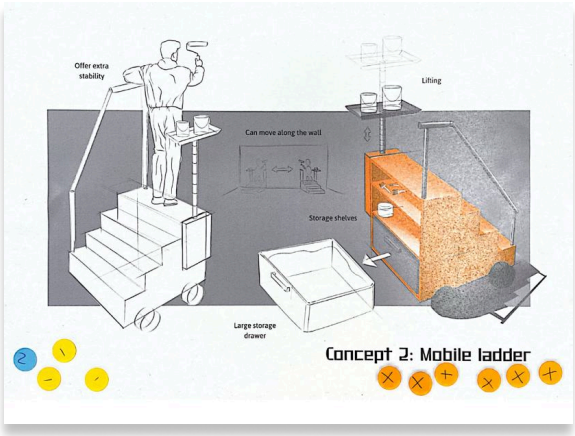

Figure 66. Mobile ladder (-1 point)

Suggestion: Making it more flexible
'Maybe it would work if you could fold the robot at the push of a button so that it could drive under something. And then that you can press a button and determine the height at which you want to work. But even then, it has to be on a stable surface. It can't be done on scaffolding.' - Foreman painter

Concern: Only works on a smooth, non-obstructed floor
'Only works for a smooth floor. If there is suddenly a hole in the floor you will fall off that thing.' - Foreman painter

6. Hooked

The workers did not think the concept Hooked was suitable for their context. They were also concerned about the batteries getting stolen.

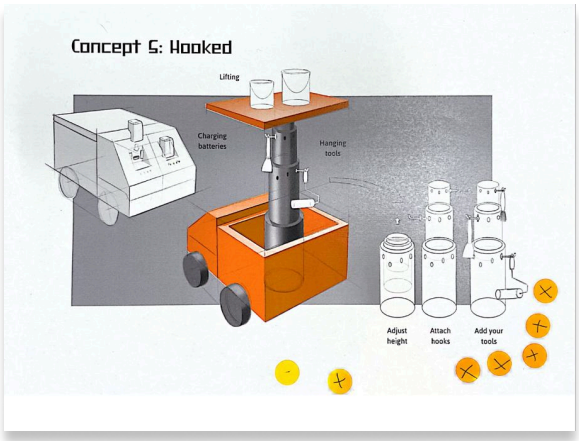

Figure 67. Hooked (-5 points)

Charging batteries can be done outside ATEX-zones
'I think it could be done in areas where you don't have to deal with explosion hazards.' - Safety responsible

Storage box to prevent falling objects
'You also do often see masks left in the workplace. For storing falling objects, I do see potential.' - Safety responsible

Concern: Batteries get stolen
'I am afraid that others will steal the batteries.' - Younger painter

7. Duster

Finally, the concept Duster was also not viable for the industrial context. They cannot bring the vacuum on the scaffolding due to the maximum load, and they already have special vacuums for the coarse dust “grid".

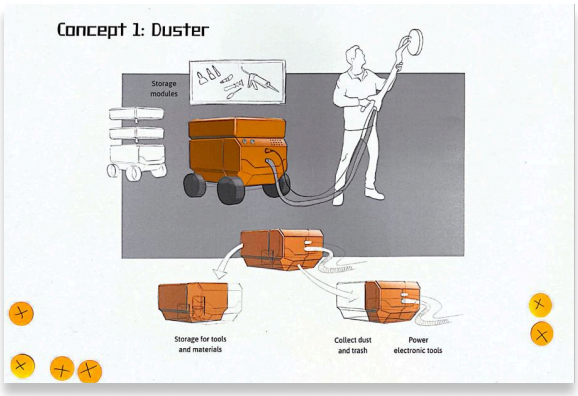

Figure 68. Duster (-6 points)

Using high-pressured air as "power”

‘Mostly we use air. Power often comes from outside again and then we use very long cables. If you are in a confined space, then they should only use ATEX equipment or use safe voltage. That is 50V.’ - Executor

Concern: Doesn't work on scaffolding

‘What is difficult for us here is that we often have to work on scaffolding. It's hard to get something like that up there.’ - Safety responsible

‘On the scaffolding you have a maximum load per square metre. 150kg per square metre. With such a hoover, you bring the weight to 1 point and then you reach that floor load a lot faster.’ - Executor

Concern: Doesn't work for the coarse dust "Grid”

‘That's perfect for house painters, though. I was a house painter myself for a while. Then you often have to sand with machines like that. There is a lot of fine dust there. It doesn't work here. We often only have fine dust at the end. From blasting, there is a coarser waste ‘grid’.’ - Younger painter

Personal take-aways Ideation and Concepts

During this phase of the project, I used many different methods to come up with solutions for the painters. In the process, I even developed my own methodology Robot Functionality Cards. During the ideation phase, I learned to trust my gut feeling and adapted existing methods for my specific project.

From all the generated ideas, it was useful to create a concept family that represented the most promising functionalities of the robot. This approach allowed for a more structured and visual evaluation with the painters. It helped them better imagine the robot in their context and made it easier to discuss which functionalities they liked or didn't like.

There is a big difference in the preferences in concepts and functionalities for the industrial and residential contexts. This means that the context in which painters work strongly shapes their expectations for the robotic assistant. Workers from the industrial context look for a solution which is compact and adaptable that fits their complex work environment, so they preferred concepts like Digit, the Safety Assistant and the Scaffolding attachment. While the workers from the residential prefer solutions that assist with reducing the physical workload of the job, like Lifter, Scaffolding Attachment and Mobile Ladder.

In the scope in Chapter 4.3, I said my focus will be on the residential and commercial contexts, but see if the robot could offer value in the industrial context as well. Because there is such a big difference between the two, the robot's design will not be suitable for both contexts. This is why I made the decision to focus on the residential context when choosing a design direction. The chosen design direction and the functionalities that will merge into one concept, are explained in Chapter 7.

07 CONCEPT DETAILING

Based on the concept evaluations and the varying needs of painters of the industrial and residential context, the decision was made to focus on designing the ideal robot assistant for painters working in the residential context. Chapter 7 summarises the development of the chosen concept.

The chapter begins with a vision for the robot and the core functionalities that define its role on the job site (Chapter 7.1). With these functionalities as a foundation, different design directions were explored, and a design direction was chosen (Chapter 7.1.2 and 7.1.3).

To bring the concept to life, a full-scale prototype was built. This prototype served not only to test the technical and functional aspects of the robot but also to explore how painters would interact with it in a real work setting. Chapter 7.2 explains how the prototype was developed, and Chapter 7.3 describes the user study that followed. The feedback from this study helped to refine the concept, leading to a new and improved design iteration, presented in Chapter 7.4.

This new design iteration was further detailed in a storyboard, also highlighting how the painters would interact with the robot (Chapter 7.5). The storyboard was used as a tool to evaluate and improve the desired human-robot interaction. Finally, in Chapter 7.6, another study was done to find out the aesthetic preferences of the painters. These insights inform the final embodiment of the robot, which will be presented in Chapter 8.

7.1 DESIGN DIRECTION

Based on the insights gathered during the concept evaluations (Chapter 6.4), the following scenario describes the vision for the design direction:

The painter places all the materials and tools they need for the day on the robot at the storage container. They then walk to the work site, and the robot follows them. Once they arrive at the scaffolding at the workspace, the robot goes up in the construction lift, and the painter climbs up using the ladder. Once on the scaffolding, (part of) the robot can go onto the scaffolding itself. At the workspace, the robot assists to make the painter's work easier, more efficient and less physical challenging. The robot keeps the tools and materials organised and close to the painter at all times, it can charge empty batteries, it can light up the workspace and can assist with translating between colleagues or tenants.

7.1.1 Functionalities

The chosen functionalities are based on the concept evaluation of painters from the residential contexts. These core functionalities shape the next iteration of the robot's design, and also informed more design requirements listed in Chapter 5. The design vision and the chosen functionalities are visualised in Figure 69.

Transporting (heavy) materials and tools from the storage container as close to the work site as possible
Helps with carrying heavy materials, like ladders, doors and glass, from the storage container to the work site, and vice versa.

Autonomous following
Follows the painter around, to and from the job site. It can avoid obstacles so it does not damage personal property.

Storage and organisation of tools and materials
Keeps the painter's tools and materials organised with compartments, shelves, hooks, and/or drawers.

Can go up in the construction lift
The robot fits inside standard construction lifts (150×150cm), enabling it to transport materials directly to the job site. This way, painters do not have to manually load materials into the lift. It could even bring coffee to the workers on the scaffolding.

Detachable part or the entire robot can be brought on the scaffolding to store tools and materials at the worksite
Stores tools and materials of the painter at the job site, keeping them close to the painter at all times. It prevents tools and materials from scattering and reduces the risk of accidentally knocking items off the scaffolding.

Construction light
To light up the workplace.

Charge empty batteries
Charges the batteries of electronic devices, like sanding machines. This way, painters do not have to go back all the way to the storage container to charge or swap the batteries.

Locking the robot
To prevent things from being stolen at the workspace. This way, the painters can leave the robot at the workspace during breaks or at the end of the day.

Translating support
To support communication within teams and with tenants.

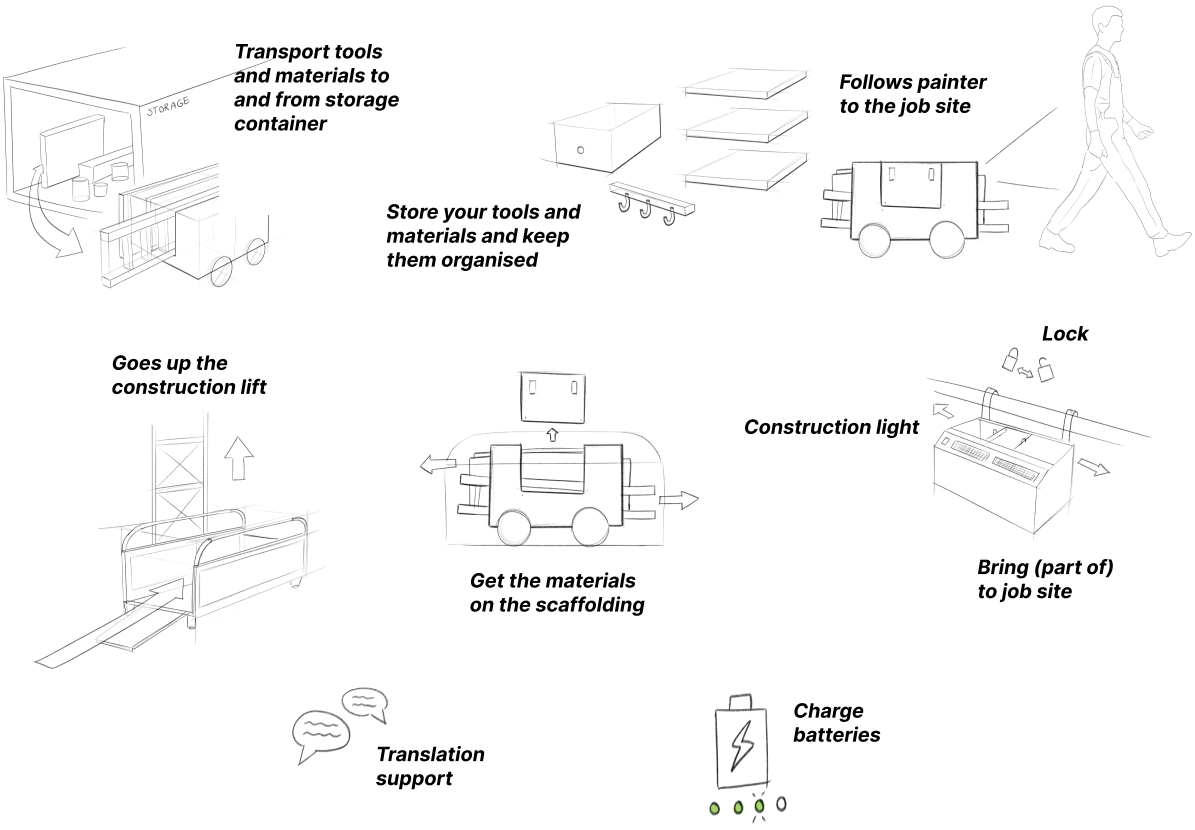

Figure 69. Vision for the design direction

7.1.2 Choosing a design direction

After formulating the vision of the design direction, multiple possible options of the design direction were explored with sketches, 3D models and prototypes (Figure 70). More information about the sketches, models and prototypes can be found in Appendix Q.

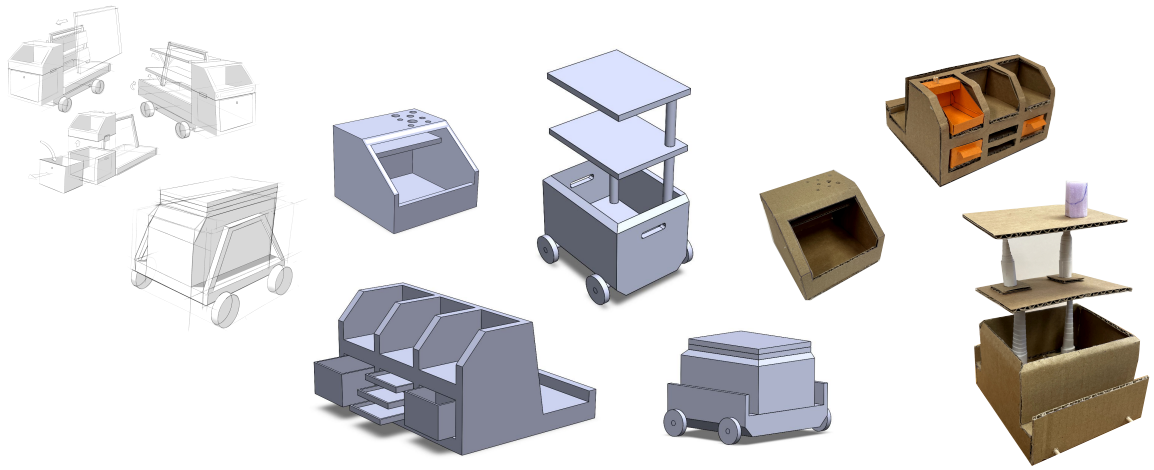

Figure 70. Design direction exploration with sketches, 3D models and prototypes

From the ideation, three directions followed.

The first idea is a robot cart with one detachable workspace that can be brought onto the scaffolding. Large materials can be stacked onto the robot cart on both sides, but you can also transform the backside by putting up the shelves.

The second idea is a main hub with multiple detachable workspaces that can be used by multiple painters.

The third idea is a robot that can drive onto the scaffolding and has a lifting mechanism to lift tools and materials at the desired height.

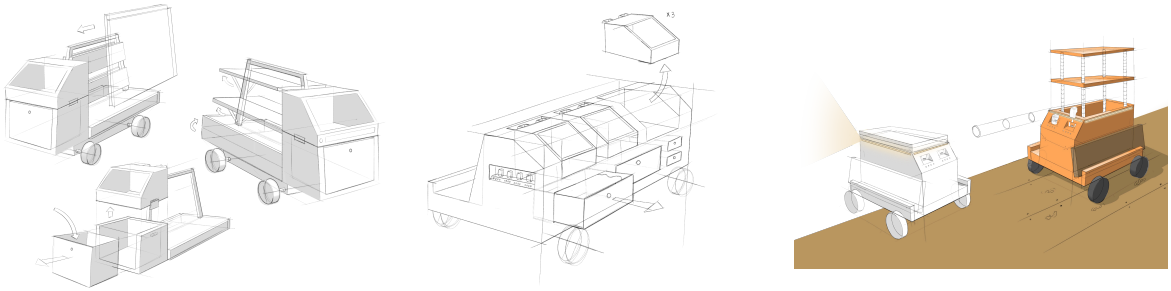

Robot with one detachable workspace

Main hub with multiple detachable workspaces

Robot with lifting mechanism driving on scaffolding

Figure 71. Three possible design directions

The chosen design direction is the robot that can drive onto the scaffolding and has a lifting mechanism to lift tools and materials at the desired height (Figure 72).

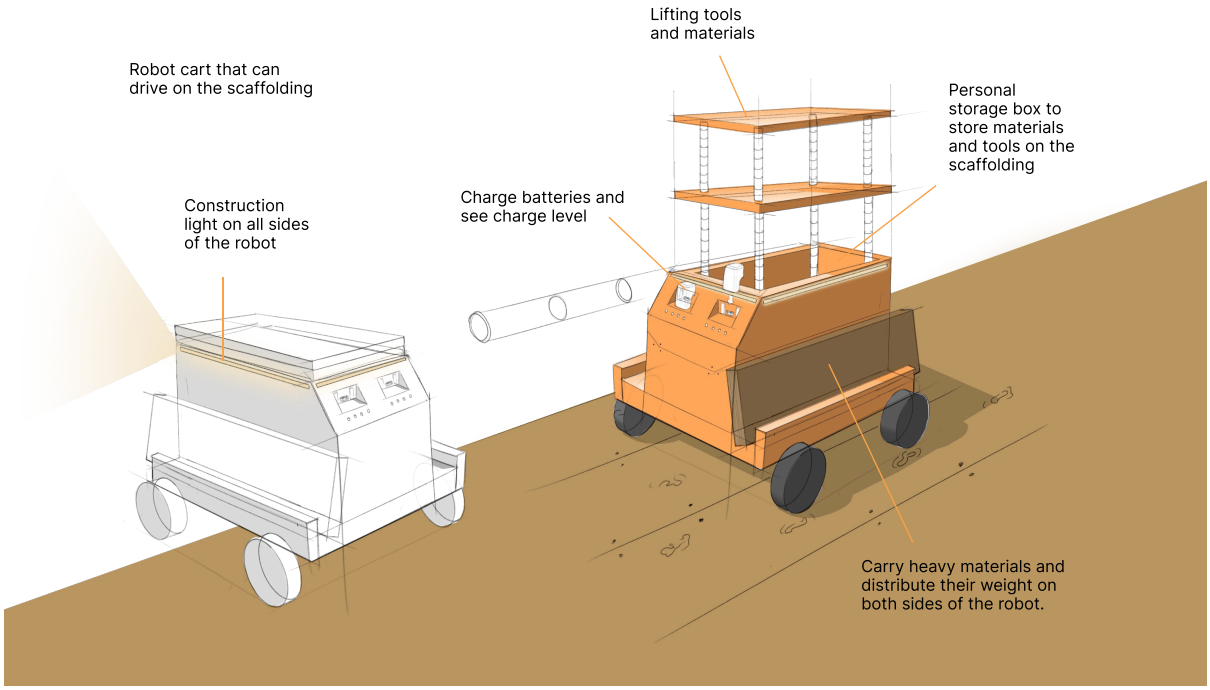

Figure 72. Chosen design direction

Since the design vision (formulated in Chapter 5.1) is to create a support robot rather than a workbench (like the detachable workbench), it is more valuable to focus on a concept where the entire robot can be positioned near the painter's workspace on the scaffolding. This allows for the desired interaction between the painter and the robot to be intentionally designed.

Because the entire robot can reach the job site rather than just a part of it, more tools and materials can be transported without the need for carrying them. With the detachable workspace, painters must carry it the final distance to the job site. This makes the chosen design direction a more effective solution for reducing physical strain on painters.

By assisting directly at the workspace, the robot also opens up possibilities for additional features, such as monitoring work progress, ensuring safety, providing weather advice, and more.

While carrying large materials, like a ladder, could be useful for the painter, this design is not primarily focused on transporting large items. Instead, this functionality is a secondary feature that can be evaluated with the painters. If it's not needed, it can be left out and the robot still maintains its core value.

The design direction and its core functionalities are visualised in Figure 73.

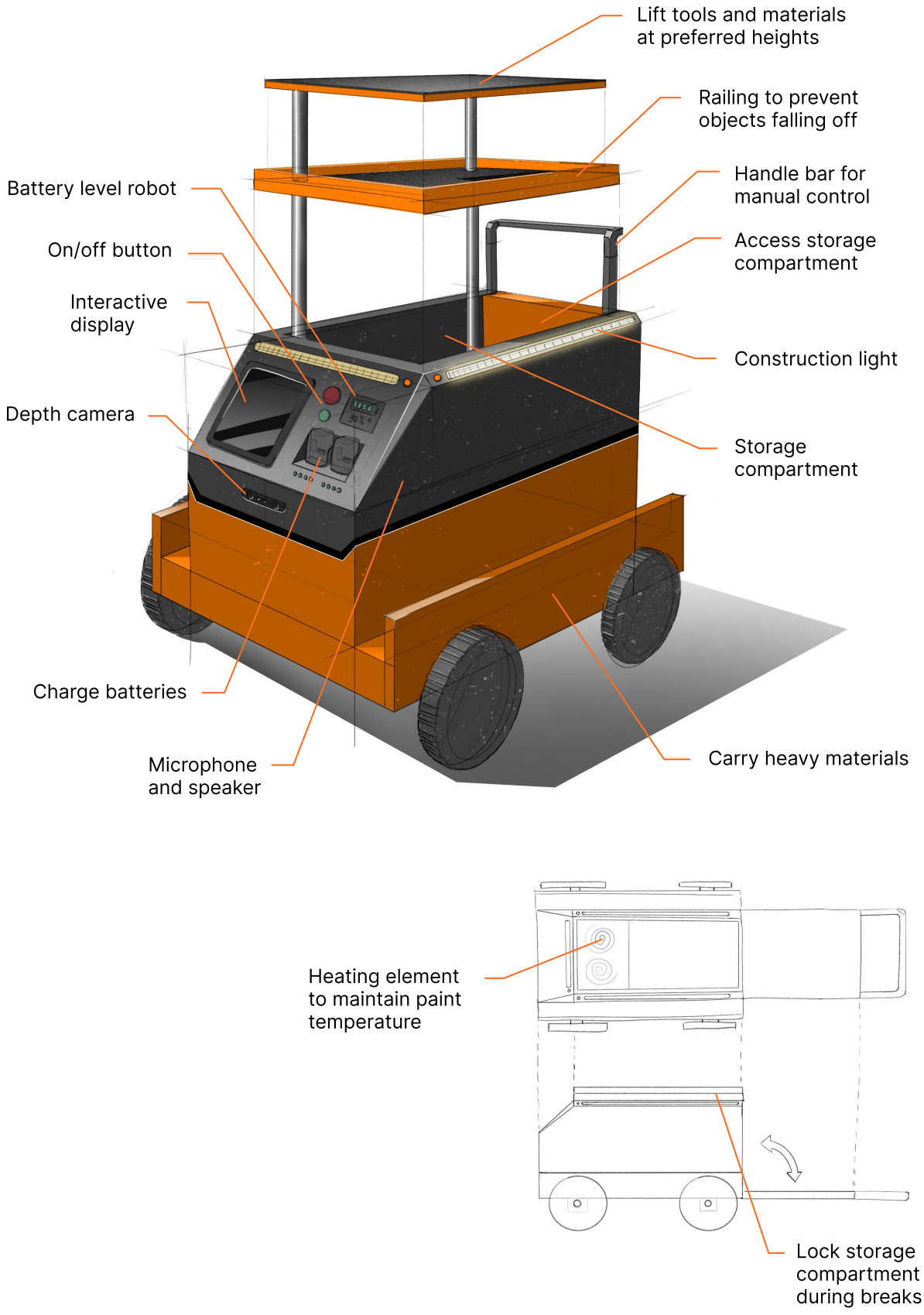

Figure 73. Visualisation of chosen design direction and its functionalities

7.2 PROTOTYPE

To evaluate the design direction and its chosen functionalities, a user study was performed with the painters using a full-scale prototype (Figure 74). The prototype of the robot served as a tool to reflect on the chosen functionalities (Chapter 7.1.3), to determine the desired interaction, and to inspire new functionalities that could assist painters in the workspace.

To make the painters believe that the robot was collaborating with them autonomously, the prototype was build atop an existing robot that could be remote-controlled. The prototype also featured some working mechanisms, such as the lifting mechanism and the construction light. It was also painted to avoid looking flimsy and to appear capable of carrying their tools.

For aspects of the robot where clear design decisions had not yet been made, such as the user interface, these features were presented in a more sketchy manner. This allowed the painters to discuss, imagine, and explain how they would prefer them to be designed.

This chapter describes how the full-scale prototype for the user study was made, the challenges faced during its development, the decisions that were made, and the lessons learned from the process. Chapter 7.3 explains how the prototype was used in the user study.



Figure 74. Full-scale prototype

7.2.1 Determining main measurements

To determine the rough dimensions of the robot, a mock-up was created. Several different configurations were tested to find the ideal maximum height of the robot. These configurations were based on the ideal measurements found in the ergonomic experiment of Hoogendijk (Hoogendijk, 2024).

- Configuration 1 (2 moving boxes): 75 cm high
- Configuration 2 (2 moving boxes + blue box): 95 cm high
- Configuration 3 (1 moving box, 1 blue box): 60 cm high
- Configuration 4 (1 moving box, 1 blue box on a cart): 75 cm high

Figure 75 shows configurations 1 and 2 with the researcher as test subject. The preference for the researcher (female and height of 165 cm) was configuration 1. However, the primary target group consists of men, with the average height of Dutch men being 183 cm (CBS, 2021).

A man with a height of 188 cm was asked to stand next to the first two configurations (Figure 76). Configuration 1 was found to be too low, as he had to bend over to touch the top surface of the robot. He indicated that configuration 2 was ideal for him. Therefore, configuration 2 will be used as the robot's maximum height. With the adjustable shelf height, it is possible to lower the shelves below the maximum height, making it suitable for painters who are shorter.



Figure 75. Testing configurations with the researcher (165 cm)



Figure 76. Testing configurations with taller person (188 cm)

To estimate the total width of the robot, the width of scaffolding was used as a reference. Scaffolding comes in various sizes: smaller scaffolding is typically 75 cm or 90 cm wide, while larger scaffolding is about 135 cm wide. If the robot needs to fit on the smaller scaffolding, it is important that a painter can still move past it.

For instance, if the robot is 50 cm wide, it would leave enough space for a painter to easily move around it on 90 cm wide scaffolding. On 75 cm wide scaffolding, it might be a tighter fit but still manageable.

The width (37 cm) and length (48.5 cm) of the moving box were exactly enough to fit a drip tray and a 5L paint bucket or two 1L or 2.5L paint buckets. There is still a lot of lost space below the display, so maybe a drawer could be added here for storing smaller items.

If the total width is 50 cm, it means the robot can either have two slots on both sides of each 6,5 cm, or one slot on only one side of the robot of 13 cm. The thickness of ladders varies, but most ladders would not fit in the 6.5 cm slot, and some could only fit in the 13 cm slot. Ultimately, it was decided to place the slots on either side, as this creates a symmetrical design and helps with weight distribution. In the next steps, it will be necessary to calculate the maximum load for both configurations: two sides or one side, and test whether using just one side would be feasible for the design.

Figure 77 shows the mock-up robot in retracted state (left) and lifted state (right).



Figure 77. Mock-up, retracted state (left) and lifted state (right)

7.2.2 Base and storage compartment

To test the desired interaction with the painters, the prototype must be able to drive. Since the locomotion of the robot is quite standard and the technology is widely used in various applications, an existing robot base from Dalco Robotics was used. This section explains the design and construction of the connection between the base and the storage compartment.

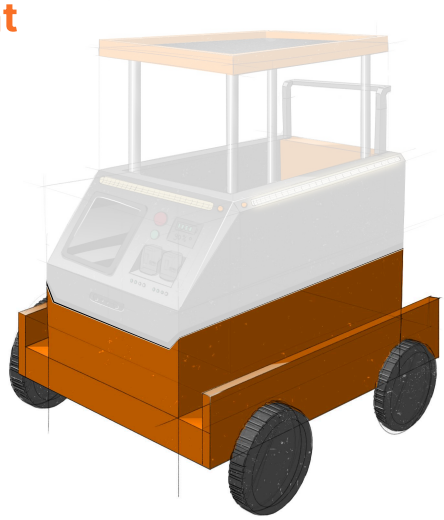

Figure 78. Prototyping the base and storage compartment

Dalco Drive by Dalco Robotics

For the robot locomotion, a base robot is used by Dalco Robotics (Figure 79). It can be controlled with a controller or it can drive autonomously using a lidar sensor and depth camera. (Dalco Robotics, n.d.)

During the user study, the controller will be used to have more control over the robot's location. In the future when the robot will drive autonomously, it needs a 20 mm gap between the base and the main body for the lidar sensor and a depth camera placed at hip height and tilted downwards. Even though it will not drive autonomously during the user study, the 20 mm is taken into account for giving a more realistic image of the future robot.

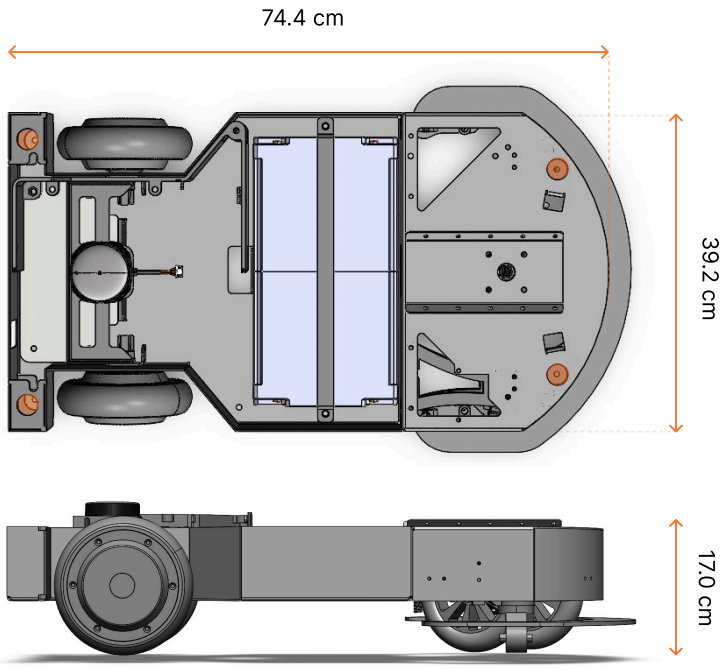

Figure 79. Measurements of Dalco Drive

Connection with Dalco Drive

The main body of the robot can be attached to Dalco Drive using four aluminium tubes with a diameter of 25 mm. For the prototype, the aluminium tubes were sawn in the correct length to accommodate the gap for the lidar sensor. Next, the tubes were threaded on one side, and secured to the Dalco Drive with bolts.

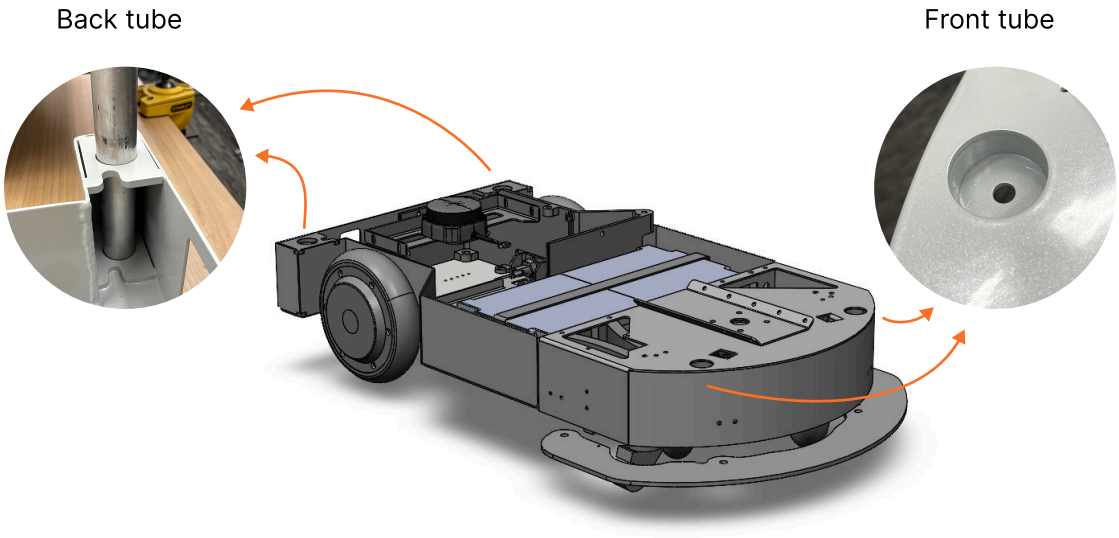

Figure 80. Connection points of Dalco Drive

The parts of the base and the storage compartment were all created in Solidworks with pin and slot connections and then laser cut. In the base plate, there are four holes with a diameter of 26 mm for the aluminium tubes (Figure 81). The connection rods fits exactly through these holes and rest on the bottom plate of the storage compartment. Because of the weight from the prototype, the prototype cannot move much compared to the Dalco Drive. By not securing it with bolts, it makes it possible to lift the prototype on and off from the Dalco Drive.

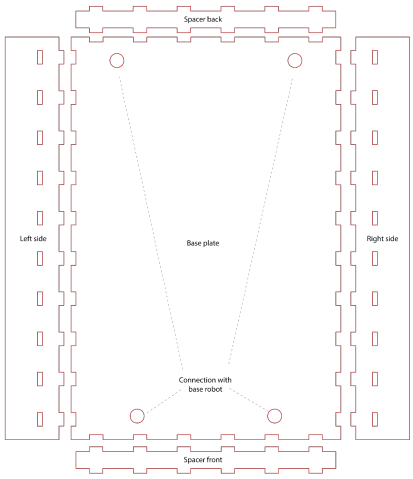

Figure 81. Parts of the base

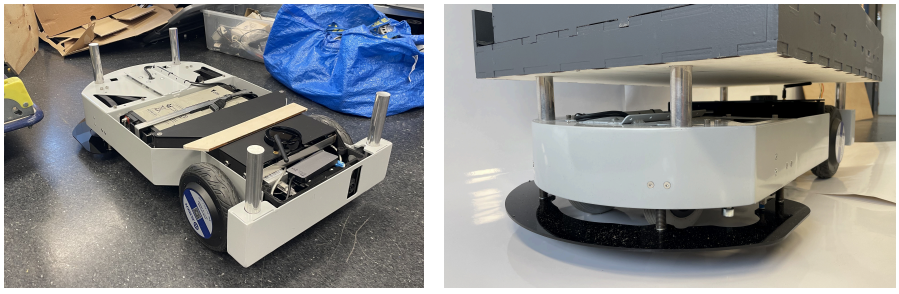

Figure 82. Dalco Drive connected with the prototype

Storage compartment

Like the base, the parts for the storage compartment were also created in Solidworks with the pin and slot connections. After lasercutting the first version of the storage bottom, some more slots were added to fit the linear actuators and the wires that connect with the electronics (Figure 83). The electronics are hidden in the area between the base plate and the storage bottom.

Next, the storage compartment's front and sides were laser cut and assembled together with tape. It was not glued together so it was still possible to disassemble the prototype and change parts. After this, the sides were connected with the interface and base (Figure 84) and finally, the rubber matt was cut to fit the storage compartment and the wings (Figure 85). Figure 86 shows the final result of the base and storage compartment.

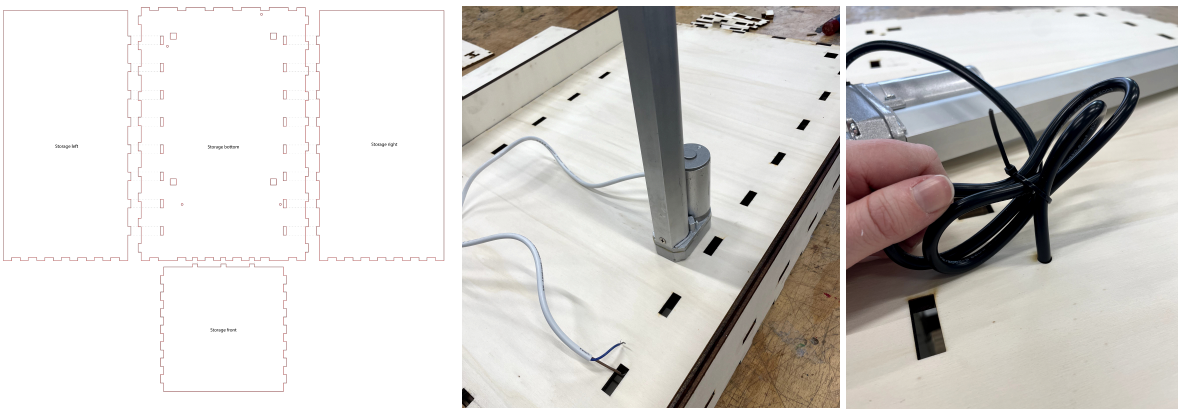

Figure 83. Lasercutting the storage compartment (left), assembling the base and storage bottom (middle) making holes for the linear actuators and wires (middle, right)

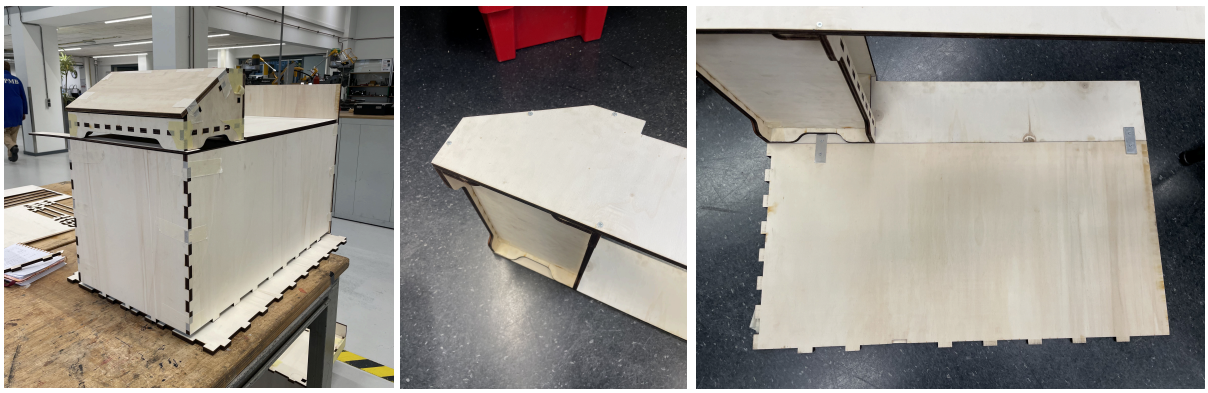

Figure 84. Assembling the storage compartment front and sides with the interface and the base



Figure 85. Assembly and placing the rubber mat



Figure 86. Final design storage compartment

7.2.3 User interface

The interface is where the painter gives commands to the robot using the interactive display and physical buttons.

This section explains the design and construction of the user interface (Figure 87). The final prototype of the design is shown in Figure 89.



Figure 87. Prototyping the interface

Design process

Figure 88 visualises the design process of the interface. The online tool Boxes.py was used to generate the different parts with wooden finger joints (Boxes.py, n.d.). It was then laser cut out of poplar wood. The interface was then assembled and connected with the sides of the storage compartment. To operate the lifting mechanism and light, the two buttons were attached to the interface after painting. Finally, a piece of rubber was cut out to resemble the interactive display.

In the sketch, the construction light is located on all sides of the storage container. For the prototype, it was decided to put the lights on the railing of the worktop. This decision was made so the painter could also set the light at a desired height.

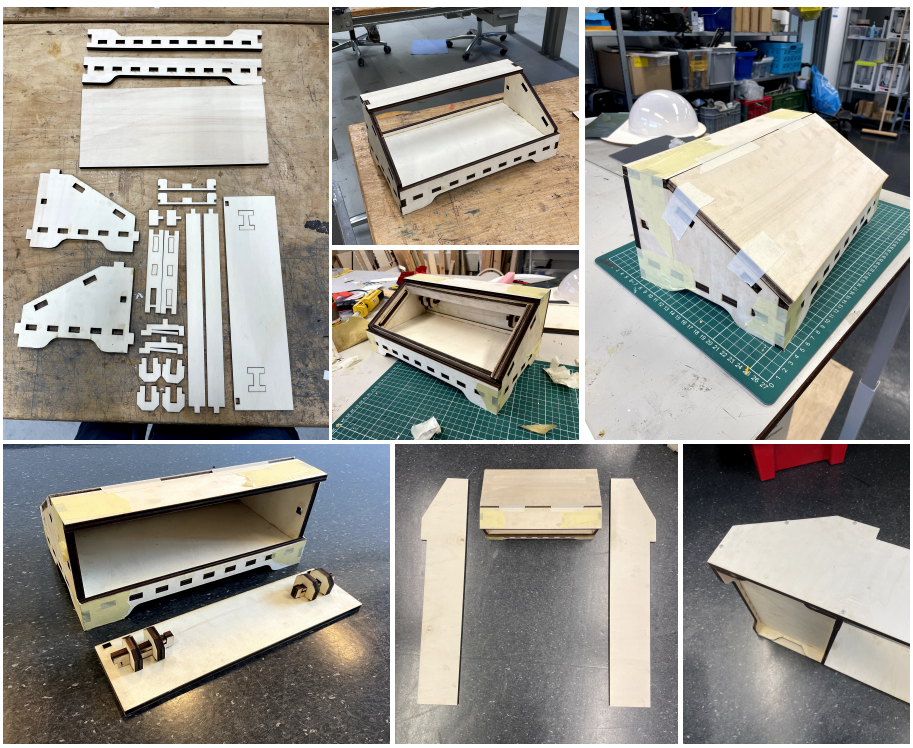

Figure 88. Design process of the interface

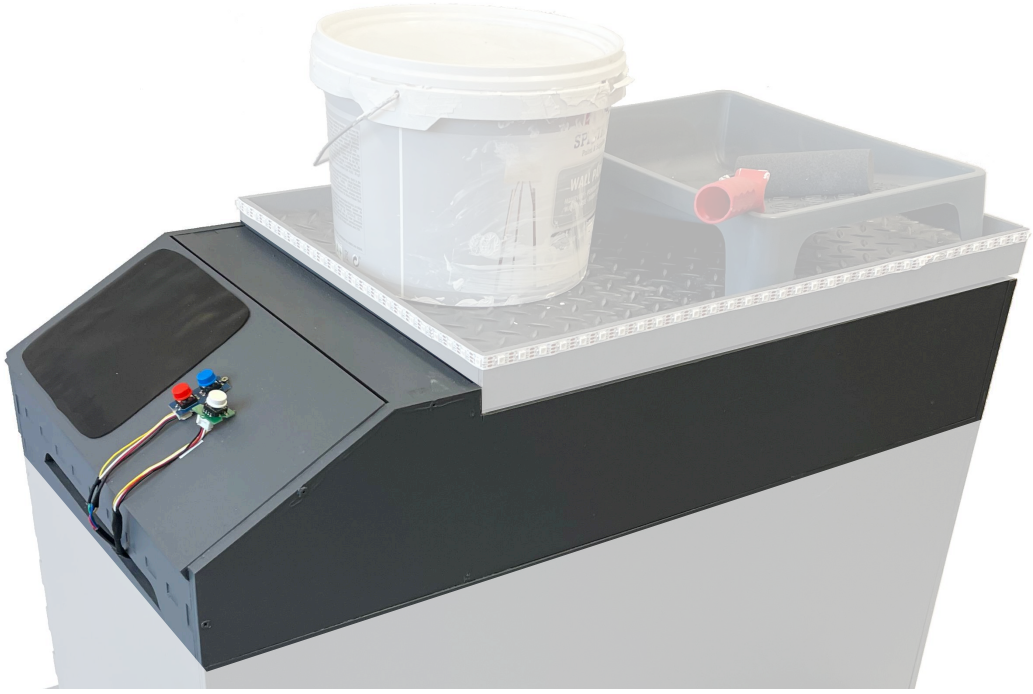

Figure 89. Final design of interface

7.2.4 Lifting mechanism

This section explains the design and construction of the lifting mechanism of the worktop (Figure 90). It also explains the set-up of the electronics and how the electronics were powered.

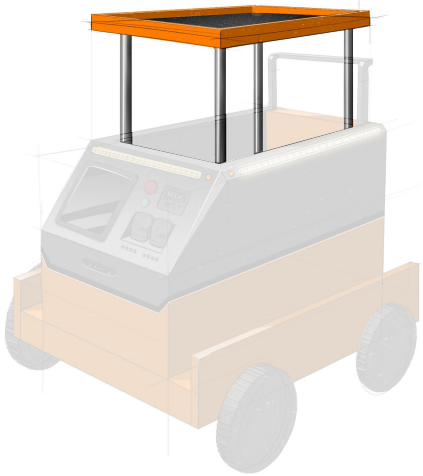

Figure 90. Prototyping lifting mechanism

Design process

It was decided to use four actuators instead of two, because there could be large forces on the worktop when the painter leans on it while using the worktop.

The first step was to actuate the linear actuators at the same time using an up and down button. To write the basic code for the microcontroller, the AI software Claude was used. On the same speed, the actuators moved slightly different from each other, so after observing the difference in speed, the individual speed for going up and down was altered to synchronise them (Figure 91).

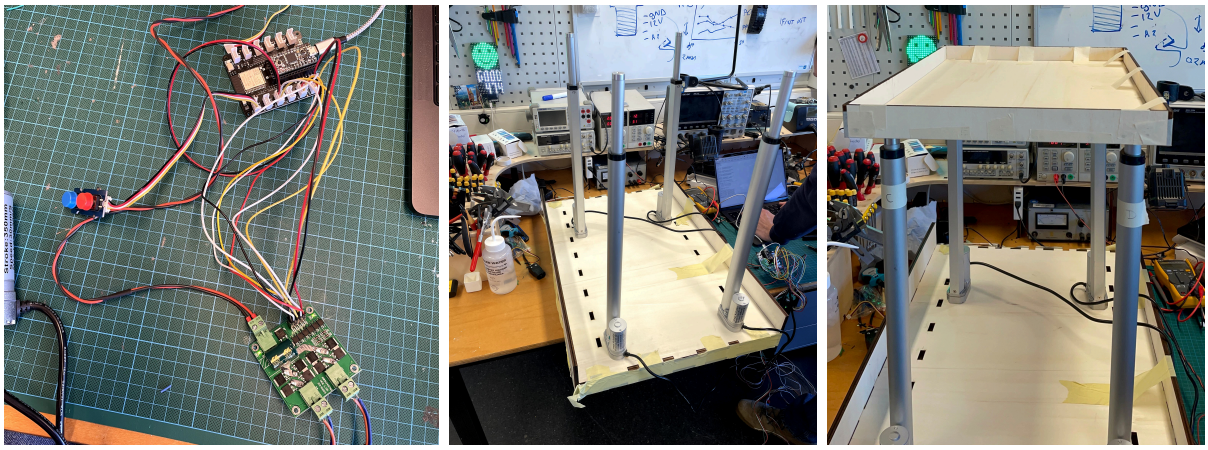

Figure 91. Testing and synchronising the actuators

After this, the electronics system was expanded with a led strip, a button to turn on the light strip, and a battery to power the system. A step-down converter was used to convert the voltage from the battery to a suitable voltage for the microcontrollers and the led-strip. For safety reasons and to prevent fire hazards, the heating mat was not integrated into the wooden prototype. A schematic of the electronics setup is shown in Figure 93. Once the electronics were functioning, the actuators were secured to the bottom plate of the storage compartment (Figure 92). Due to the thickness of the wood, the connection was covered. This issue was resolved by using a thinner metal rod that passed through the actuator's hole.

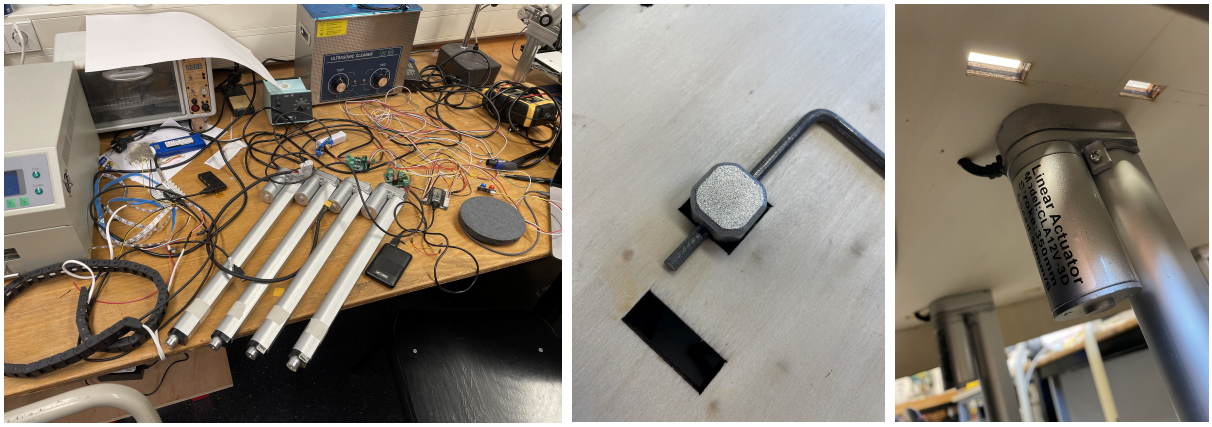

Figure 92. Attaching the actuators to the prototype

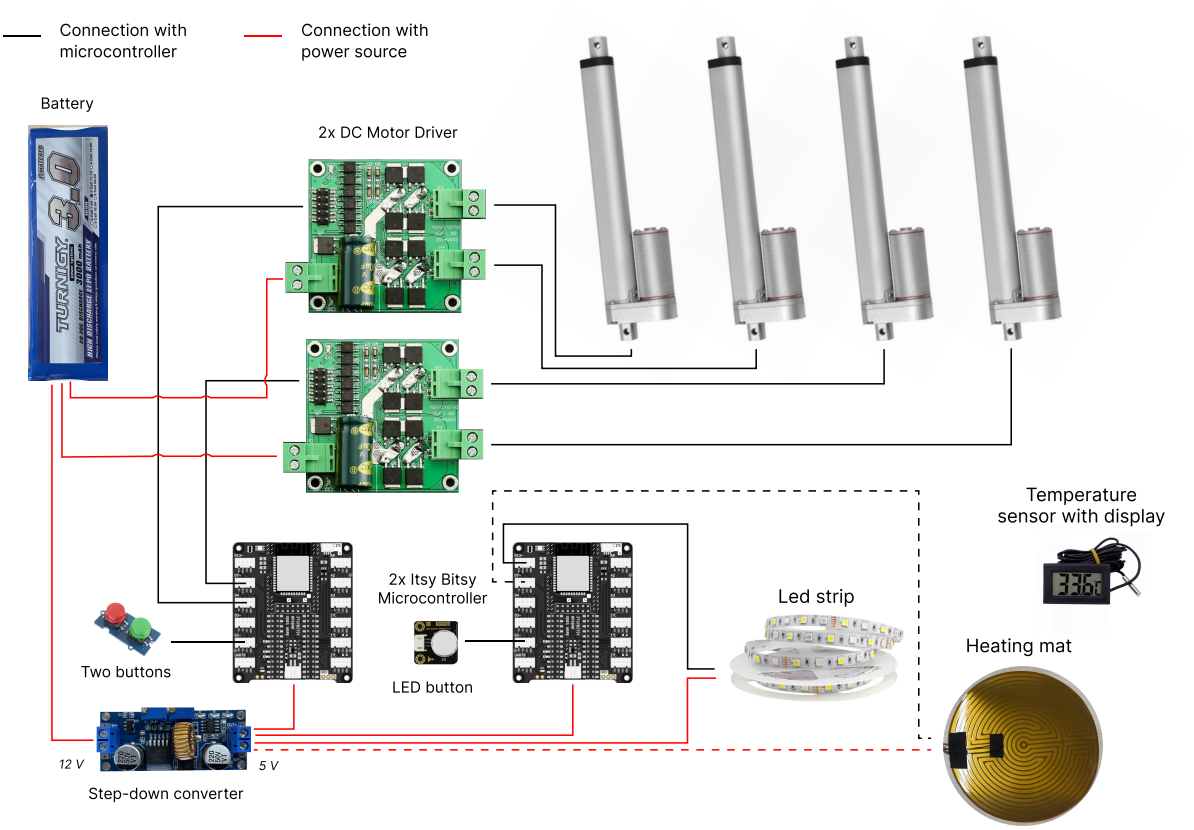

Figure 93. Schematic set-up of the electronics

The entire electronics system is secured on the backside of the bottom plate of the storage compartment. The microcontrollers, motor drivers and step-down converter were secured with small screws, and the wires, battery and the usb-hub were organised and secured with cable ties to the adhesive cable organisers (Figure 94). The led cables were organised with a flexible cable organiser (Figure 95). One of the slots from one of the sides of the storage container was cut off so that the wires from led strip and linear actuators could be connected with electronics system. Finally, the buttons of the light and lifting mechanism were attached to the user interface. The final prototype is seen in Figure 96.

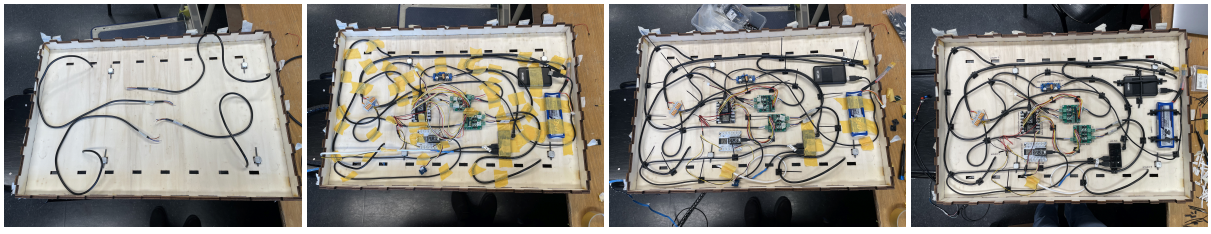

Figure 94. Connecting and organising the electronics in the prototype



Figure 95. Flexible cable organiser



Figure 96. Final design lifting mechanism

7.2.5 Back door

The back door can be opened to access the storage compartment and its handle can be used for manual control of the location of the robot.

This section explains the design process of the back door. Figure 98 shows the final prototype of it.

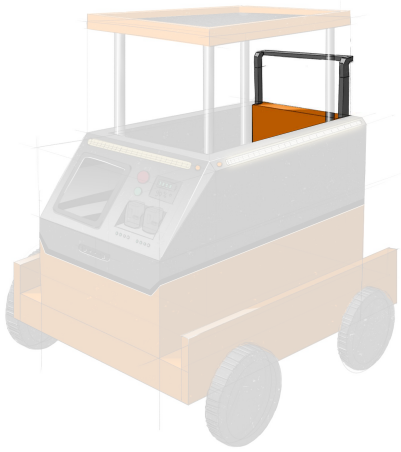

Figure 97. Prototyping the back door

Design process

The back door was first laser cut and then attached to one side of the storage container using three piano hinges, allowing it to open and close. The decision was made to have the door open to the side rather than having to pull it down, as originally considered in the design direction (Chapter 7.2). This approach reduces the overall length of the robot and prevents painters from placing heavy objects on the open door, which could lead to the door breaking. Two square magnets were embedded in both the door and the opposite side of the storage container to keep the door in place when it was closed. Finally, an adjustable handle was attached to the back of the door (Figure 99).



Figure 98. Final design of the back door



Figure 99. Adjustable handle

Personal take-aways of making the 1:1 prototype

This prototyping process taught me a lot. Not just about building, but about how fast you can learn by actually doing. Starting with a rough mock-up out of boxes helped me quickly test proportions and measurements. Using tools and materials painters helped to make decisions for the measurements. A recommendation for future me is to bring a mock-up into the real context (like putting it on scaffolding) to test things like how much space is left and how easy it can move around the context.

Building the storage compartment came with several challenges that taught me valuable lessons. Using Solidworks with the pin-slot connections and laser cutting all the parts, made it easy for me to make design adjustments. Not glueing but taping together the parts were also helpful to easily assemble and disassemble parts. The bending of the wood was unforeseen, but I used tape to bend it back in position. For the next time, more pin slot connections can be used to keep the material straight. The challenges showed me the importance of starting prototyping as soon as possible, so the problems quickly become visible and you can improve the design step by step.

Getting the electronics to work was a big challenge, as I had little experience wih it. I started from scratch, but breaking it down step-by-step, and using AI tools to help generate code, made it doable. I also learned new skills like soldering, shortening cables, and cable management.

Overall, making this prototype showed me how useful it is to start building early, stay flexible, and let the prototype guide the next design iteration.

7.3 CO-CREATION SESSION

For evaluating the designed robot features and deciding on the desired interaction between the robot and the painter, a user study was performed. This chapter explains the method, results and insights gathered from the user study.

7.3.1 Research aim

The goal of this study is to evaluate the designed functionalities of the robot, and to find out how the painters visualise their ideal robot assistant.

To research this, the following research questions were formulated:

1. What is the painter's preferred way of interacting with the robot?
   a. What level of intelligence does the painter expect from the robot?
   b. What level of control would painters like to have over the robot?
   c. Do painters prefer a physical, digital or hybrid user interface?
2. Which functionalities of the robot are useful for the painters? Which functionalities are not useful/unnecessary for the painters?
3. What is still unclear or confusing for the painters while collaborating with the robot?

7.3.2 Method

Participants

Two male older painters, both aged between 55 and 64, participated in the study. They attended the session together to stimulate the discussion.

Two researchers were present during the user study. The main researcher led the conversation, while the assistant researcher controlled the robot prototype.

Tools and equipment

The following tools and equipment were used to conduct the user study:

- Consent forms
- Pens and paper
- 2 phones for audio recording and taking photos
- Robot prototype
- Robot base
- Car
- Safety shoes for researchers
- Fake or empty props (to simulate a realistic painting environment without putting too much weight on the robot)

- Paint bucket
- Drip tray
- Large cardboard pieces
- Different types of buttons (to test painter preferences for physical interaction).

Procedure

Prior to the study, the research ethics checklist (Appendix E) was completed and discussed with ethics coordinator Thijs Slot and data steward Jeff Love. Before starting the experiments, the participants were asked for consent.

A pilot was performed prior to the user study (Figure 100). The pilot improved the clarity of the introduction that is given at the beginning of the user study and helped the main researcher and the assistant researcher work together more smoothly.



Figure 100. Pilot

The co-creation session

The proposed methodology was inspired by the Speculative Enactments approach to speculative design (Elsden et al., 2017). The session was executed in the working context of the painters, including a storage container, gallery and scaffolding. At the briefing, it was stressed that the product is not finished and the researcher asked the participants to play along to interact with the robot and think along how to improve it. The complete briefing can be found in Appendix R.

Scenarios

The participants went through a set of scenarios, which act like starting points (Figure 101). At the beginning of a scenario, the researcher first explained the intended purpose of the robot. The participants are given freedom to see how they would interact with the robot.

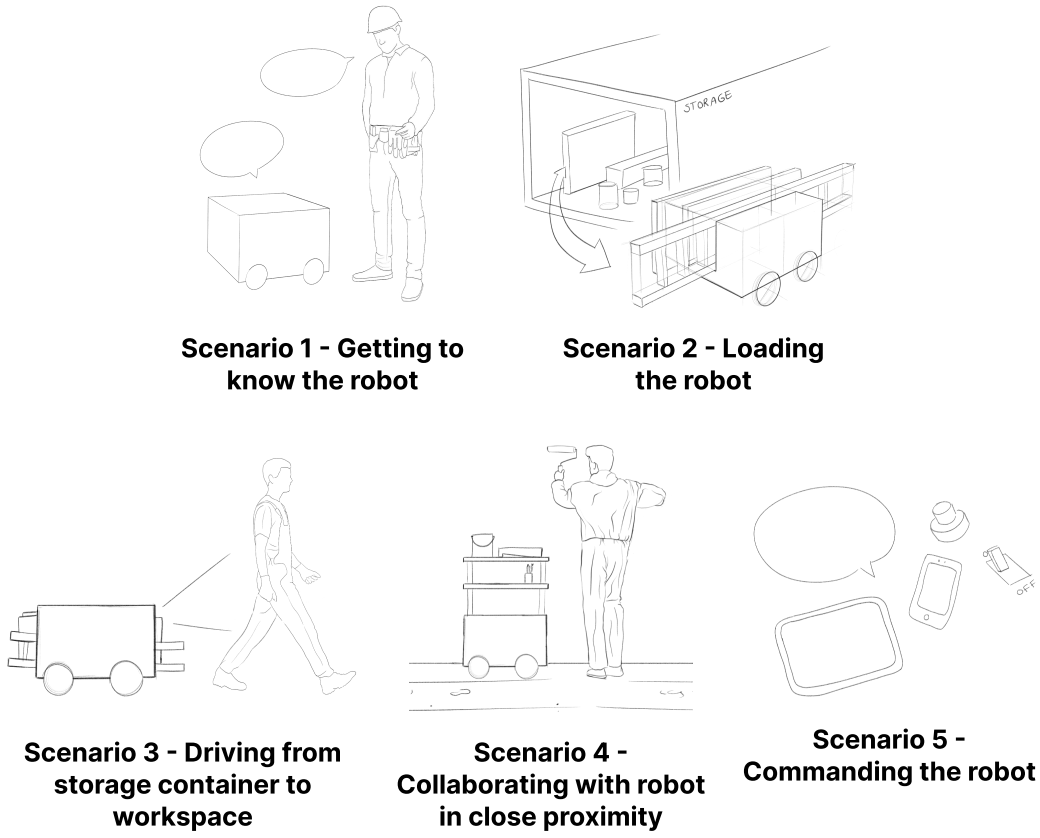

Figure 101. Scenarios of the co-creation session

The role of the main researcher
During the session, the discussions, ideas, and opinions of the painters are most important. The painters should form their own opinions, so the researcher should take on a guiding role rather than a leading one. The researcher can ask questions to elaborate on thoughts or gently stimulate the painters' creative thought process.

Prompts to stimulate interaction
"What would you like the robot to do at this moment?"
"How would you achieve this?"
"How would you prefer the robot to act now?"
“And [asking the other painter] how would you do this?”

Prompts to stimulate reflection
- *"Was this interaction intuitive for you?"*
- *"What would make this process easier or faster?"*
- *"Do you feel comfortable working with the robot in this way?"*
- *“What other purpose could the robot have in this scenario? What smart functions could it have?”*

Each scenario takes around 20 minutes. Once there is enough information gathered about the research questions, the researcher moves on to the next scenario.

The role of the assistant researcher
The robot's behaviour was controlled by a research assistant. They made the robot act how the painters wanted the robot to act. The lifting mechanism and the light system only work using physical buttons, so if the painter wanted to control the lifting mechanism with voice commands, the research assistant pushed the buttons to manipulate the robot for the painter.

Data processing and analysis
For the qualitative results, the audio recording of the user study were transcribed and analysed. Any personal information will be anonymised. After transcribing the interview, the audio recording was deleted. The transcription of the full session can be found in Appendix S. The transcripts were analysed in a step-by-step process (Burnard, 1991). The transcripts were first read through and interesting quotes were highlighted. These quotes were then grouped to extract key insights from each interview.

The ideas and suggestions of the participants were summarised in five clusters which are explained in Chapter 7.3.3; getting to know the robot, collaboration at the storage container, collaboration between the storage container and workspace, collaboration at the workspace and commanding the robot.

7.3.3 Qualitative results

The qualitative results are insights gathered from analysing the interview transcript. The full transcript can be found in Appendix S. The insights are substantiated with quotes from the two older painters.

1. Getting to know the robot assistant

These insights focus on how painters adapt to working with the robot. Like a new colleague, they want to get to know it first and understand its potential before fully relying on it. Once it proves its usefulness, they begin to see it as part of their team.



Figure 102. Painters getting an introduction to the robot

1A - Building a relationship with the robot

Working with a robot takes time to get used to. Painters need to get to know the robot and its capabilities, just like they would with a new colleague. They also give the robot a name.

'It's takes some time getting used to how it moves and reacts.' - Painter

'Let's go Bassie.' - Painter talking to the robot

1B - The robot must earn its place on the job site

At first when hearing about a robot assistant that would help them in the workspace, the painters were skeptical about the robot's usefulness. The robot proved its usefulness during the user study with their daily tasks and gained the trust of the painters. The painters appreciated that it assists rather than replaces them.

'First I was skeptical, but now I see the usefulness.' - Painter

'Do you see this tool more as an assistant or a replacement for a task?' - Researcher

'More like an assistant.' - Painter 1

'Exactly, it takes work off our hands, but doesn't replace us.' - Painter 2

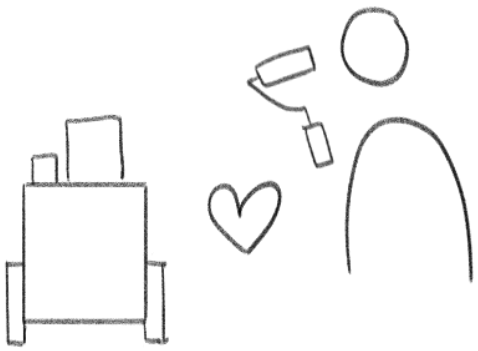

2. Collaboration at the storage container

These insights focus on how painters want to collaborate with the robot at the storage container, mainly for loading and unloading tools and materials.

In short, the painters use both the storage compartment and the top when loading the robot. There are improvements to be made to the side wings and the width of the storage compartment to fit commonly used materials and tools. The access of the storage compartment is also to be improved, as it currently leads to poor posture.

The painters would like to charge the batteries of their electronic devices inside the storage compartment of the robot, and finally, they would like to lock the robot so it can be left unattended and will not be stolen.



Figure 103. Collaboration at the storage container

2A - Loading tools and materials on the worktop of the robot

Painters instinctively place items on top of the robot when loading their tools and materials for the day. However, there is a increased chance that the materials vibrate and fall off the top when the robot moves on uneven terrain.

'The storage compartment is full, so I started placing things on top' - Painter 1

'When we work with two or three people, it quickly fills up.' - Painter 2



Figure 104. Painters used the worktop to store tools and materials



Figure 105. The side wing was too small for the ladder



Figure 106. Unloading the storage compartment

2B - The side wings are not wide enough
The ladders used in the painting context were wider than expected, so it didn't fit in one of the wings (Figure 105). The painters suggested a wider wing, so that it could fit a ladder, and also suggested using hooks or rope to securing it.

'Our ladder doesn't fit. Maybe if it had hooks or rope to secure it, it would work. The materials are also standing too straight, causing them to fall easily.' - Painter

2C - Slightly wider storage compartment
The distance between the linear actuators was a bit too narrow to fit the 10 litre paint buckets.

'The 10-litre buckets don't fit in the storage compartment. When we tried, we had to lift the worktop. It is just a bit too narrow.' - Painter

2D - The access to the storage compartment is not ideal when worktop is retracted
When loading materials, painters struggled to use the storage space efficiently due to poor visibility and they could not reach all the way. It also results in poor posture when (un)loading the storage compartment (Figure 106).

'Maybe you could make a slide-out system?' - Painter

2E - Charging batteries inside the storage compartment
Painters want to charge batteries inside the storage compartment to protect them from rain and sunlight.

The charger that is used in the painting context is also much larger than expected.

'I would place the charger here inside the storage compartment, so it's protected by the rain.' - Painter



Figure 107. The painters would like the battery charger to be inside the storage compartment

2F - The painters want to be able to lock the robot
When taking breaks, painters want to lock the robot so it cannot be moved, used, or stolen. However, they still want the batteries to charge while the robot is locked.

'While the robot's locked, it should still continue charging batteries, but the robot cannot be moved and the buttons and screen cannot be used.' - Painter

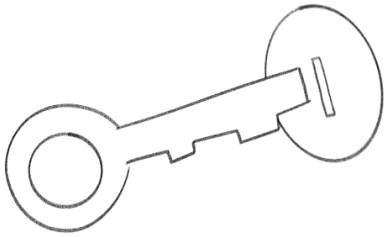

3. Collaboration between storage container and workplace
These insights focus on how painters want the robot to assist when moving between the storage container and the workspace.

They expect the robot to carry all necessary tools and materials and follow them to the workspace. Since obstacles and uneven terrain can be challenging, securing materials during transport is important. While painters would like the robot to retrieve items from storage, they don't expect it to work entirely on its own without human assistance.

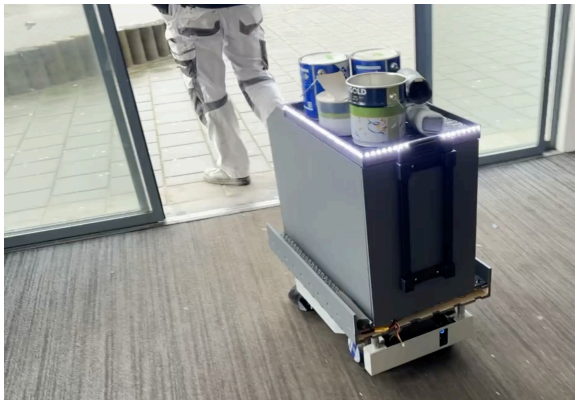

Figure 108. Collaboration between storage container and workspace

3A - Painters normally carry their tools to the workspace
The storage container is often not directly in front of the workspace. It could be located several streets away, so painters must carry their tools and materials the entire distance. Sometimes, they use a wheelbarrow, but then they still have to carry and push the wheelbarrow. The wheelbarrow then also has to be in a central position for all painters, so they still have to walk back and forth between the wheelbarrow and the workspace carrying the materials.



3B - The robot follows me
Painters want the robot to autonomously follow them to their workspace. They adjust their own walking route to ensure the robot can follow the same path behind them.

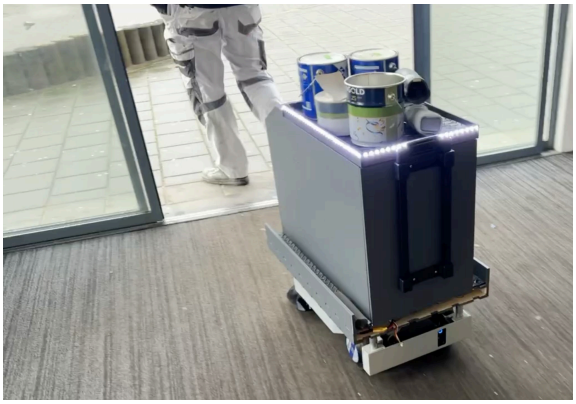

Figure 109. The robot follows the painter

3C - Navigation challenge: Robot must overcome obstacles
While navigating between the workspace and storage compartment, the robot can come across different (uneven) terrains, sloped surfaces and other obstacles (Figure 110).

3D - Securing materials during transport
During the study, the robot and the materials on the top were vibrating quite a bit on the uneven terrain. When driving over a sloped surface, something even fell off the top.

'It is mostly flat terrain, but it gets trickier on uneven terrain. It needs to be more stable.' ***- Painter***



Figure 110. When navigating between the storage container and the workspace, the robot encounters many obstacles

3E - The robot retrieves items from storage container
If a painter forgets something, they want to send the robot to retrieve it from the storage container. The robot should communicate the demand with a colleague present at the storage container, who can help load it.

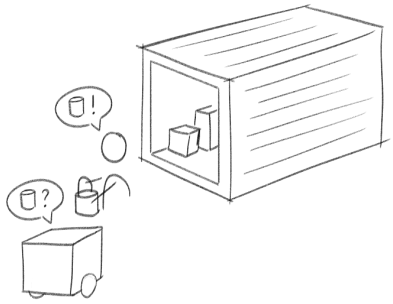

3F - Painters do not expect the robot to execute all commands by itself
Sometimes the painter or a colleague gets involved to complete the task of a robot. For example, the painter helps the robot inside the elevator by pushing the buttons (Figure 111), a colleague can help loading a requested material at the storage container.

'I don't expect the robot to push the buttons of the elevator. I can help with that.' - Painter



Figure 111. Painter helps the robot with pushing the elevator buttons

4. Collaboration at workspace

These insights focus on how the painters would like to collaborate with the robot at the workspace.

The painters would like the robot to stay on the gallery instead of the scaffolding so it doesn't get in the way of other workers. They prefer to have one robot per two painters. They want it to give weather statistics and useful notifications, and help with the language barrier. They would also like to change the angle of light, have a trash compartment, and have battery status light indicators.



Figure 112. Collaboration at workspace

4A - Not on the narrow scaffold, but on the gallery

The painters do not want the robot to move on the narrow scaffold, as it takes up too much space. Carpenters often pass behind them, and they need to keep the walkway clear. The goal is for the robot to be as close as possible to the workspace, but it should be safe for the painters, other employees and the environment.

Even while the robot is on the scaffold, the painters still held their brush and bucket in their hands.

Painters prefer the robot to stay on the gallery on the same floor, mirroring their location (Figure 114). This way, they can quickly grab additional tools or materials when needed.

'There are often other workers on the scaffolding as well. The robot should not block the walkway for them.' - Painter



Figure 113. Robot on the scaffolding (left) and gallery (right)

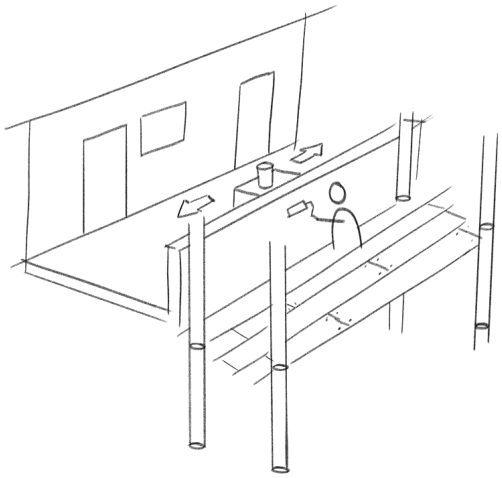

Figure 114. Robot working on the gallery mirroring the painter on the scaffolding

4B - The robot keeps a preferred distance from me
When painters move around their workspace, they want the robot to automatically adjust its position, staying at a preferred distance.

'He (the robot) needs to give me some space. I would prefer him to manage that himself. If he stands in the way, it can be annoying.' - Painter

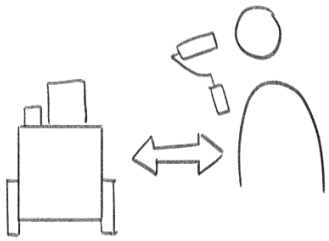

Figure 115. Robot keeps at a set distance

4C - One robot per two painters
Painters often work on tasks in duos. While there could be six painters at a job site, the painter duos can be spread over the entire flat, making it difficult to share one robot. It would be ideal to have one robot per duo.

'One robot per duo would be ideal.' - Painter

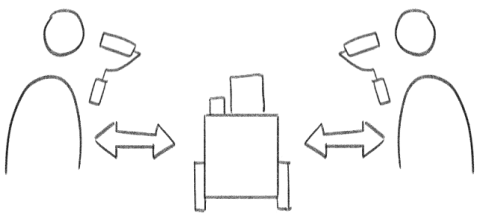

Figure 116. One robot per two painters

4D - Advisor about incoming rain, temperature and humidity
The painters would like to get reminders from the robot about temperature, incoming rain and the humidity level, because their work and specific tasks are affected by it.

'Rain forecasting would be useful, especially in the Netherlands.' - Painter 1

'Humidity is also important. We are not allowed to paint above 85% humidity. If the robot can measure that, it would really help.' - Painter 2

'Yes, and temperature too.' - Painter 1

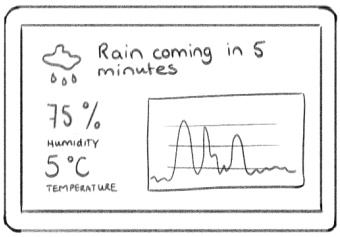

Figure 117. Weather advisor

4E - Alerts about time
Painters want to be able to tell the time on the interactive screen. They also like the robot keeping track of time during tasks, like drying times, or announcing breaks.

4F - No information overload
The robot should only give important information to the painter, to prevent information overload

'I only want to get a notification if it is really useful for me. Not too many notifications.' - Painter



4G - Overcoming language barriers between colleagues or tenants
The robot should be able to act as a translator between colleagues and tenants.

'If they don't understand us, we now try to explain things using gestures. The robot would be able to stand in between and translate the conversation' - Painter

'You just say, 'Hey Karel, tell him this in Polish." - Painter

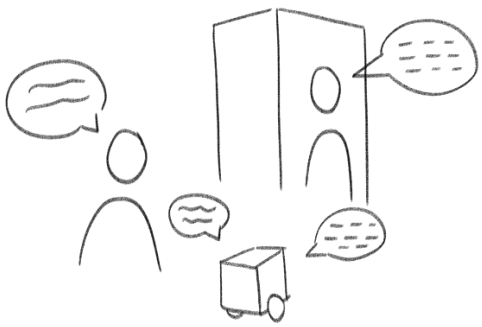

Figure 118. Robot acts as translator

4H - Adjustable angle of construction light
Painters want control over the angle of the construction light to direct the light where they need it.

'Additional lighting would be useful, especially if we work early or late.' - Painter

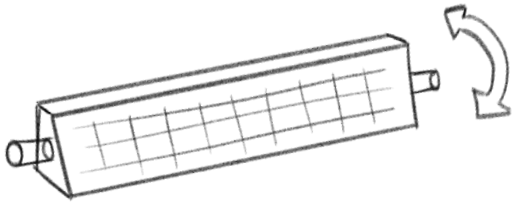

Figure 119. Adjustable angle of construction light

4I - Trash compartment
The painters would like to have the possibility to attach a trash bag or have a trash compartment for collecting the trash they gather throughout the day.

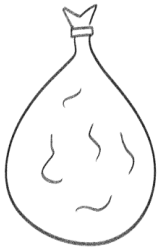

4J - No need for the heating element
Painters believe the heating element won't benefit their work because any heat applied to the paint will be lost once it is painted on a cold surface. The heating element also poses a safety hazard if left unattended.

'During breaks, do you then take the paint inside normally?' - Researcher

'No, we usually just leave it. And it's fine then.' - Painter

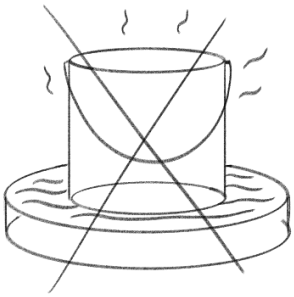

Figure 120. No heating element

4K - On/off and light indicators
The painters would like some way of telling wether the robot is turned on or off, and they would like to see the state of the battery using light indicators.

5. Commanding the robot

These insights focus on how painters would like to control the robot.

In short, they want the option to switch between different modes to adjust the robot's behaviour. They prefer a hybrid system with both physical buttons and a digital interface, as well as a manual-automatic switch and a physical joystick for manual control.

It's also clear that painters will interact with the robot in a rough manner, so it needs to be robust to handle this.



Figure 121. Commanding the robot

5A - Using different modes to control the robot's behaviour

The painters want to control or command the robot using different modes, like follow-mode, loading- and unloading-mode, work-mode, parking-mode, or retrieve from the storage container-mode.

'But if you stop somewhere and he keeps running after you, isn't that annoying?' - Painter 1

'Maybe there should be a 'parking mode'. - Painter 2

'Yes, a function that allows you to stop it and release it again.' - Painter 1



Follow-mode: follows painter's to workspace and storage



Work-mode: staying at a preferred distance

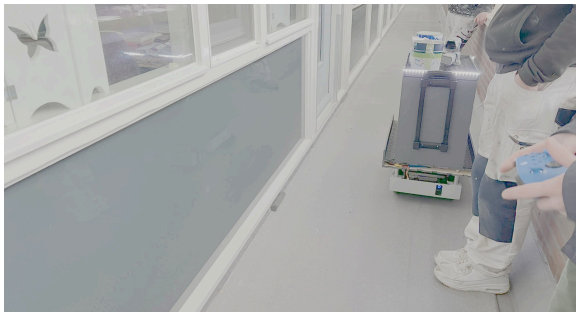

Park-mode: the robot stays at a certain location



(Un)loading-mode: turns back to the storage container

Figure 122. Different modes to control the robot

5B - Adjusting personal preferences manually
Painters prefer to have physical buttons to control the lighting and lift mechanism.

They are also more familiar with physical buttons through interactions with cherry pickers and machines.

'The controls are the similar to the cherry picker controls.' - Painter

5C - Desired physical buttons
The robot should have an emergency stop button that is visible and accessible. It should have buttons to turn on and off the robot and the light. The lifting mechanism buttons should have an up an down icon.



Figure 123. Desired physical buttons



Figure 124. Prototype's handle

5D - Joystick for manual control of the location of the robot
Painters didn't use the handle for manual control (Figure 124). They prefer a joystick to make adjustments to the robot's location. It could be a physical joystick on the back of the robot or a digital joystick on their phone.

5E - Switch between autonomous and manual mode
The painters want the option to manually control the robot's location to help if it gets stuck or to adjust its position when it doesn't accurately understand where it needs to go.

Would you prefer to control it with the joystick or should it automatically come after you?' - Researcher

'Maybe both options should be possible so you can choose. If the robot gets stuck, you should be able to control it manually.' - Painter



5F - Giving painters multiple options to control the robot
This gives painters the ability to control the robot based on their needs, preferences or specific work-related tasks.

‘Maybe both options should be possible so you can choose. If the robot gets stuck, you should be able to control it manually.’ - Painter

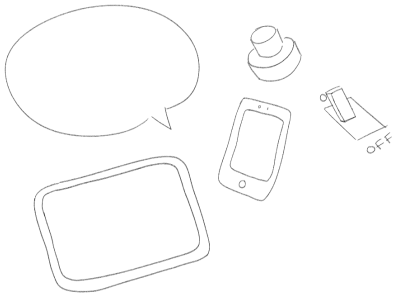

5G - No careful treatment
The painters expect the robot to be robust, as the painters won't treat it carefully.

'People will not be careful with it.’ - Painter



7.3.4 Conclusion

This user study provided valuable insights into the interaction preferences, functional expectations, and challenges faced by painters when collaborating with the robotic assistant.

Evaluation of the robot's features

Some features of the robot played a big role in improving the efficiency of the work and making it less physical challenging. The ability to carry a lot of tools and materials, follow painters autonomously, carry large materials, charging batteries, the lifting mechanism and staying at a preferred distance at the workspace helped the painter work more efficiently and makes the work less physically challenging. The painters also came up with new features that would be beneficial for them; the robot can retrieve forgotten items from the storage container with the help of a colleague, the robot can be (un)locked with a key, it keeps track of temperature, humidity and gives alerts on upcoming rain.

Some functionalities were less useful for the painters. The heating element for paint was considered ineffective and posed potential safety risks if left unattended. They also proposed to use a joystick rather than a handle to manually control the robot.

Some features also need some changes to fit to the needs of the painters. Both the storage compartment and the side wing needed to become broader to fit the materials of the painters (Figure 125, left). For the wings, the painters came up with the idea of making it modular so that they can choose a wing that fits the job best. It was not expected that the worktop would also be used for storage during transportation. During transportation, materials on the top and in the wing vibrated significantly, especially when overcoming obstacles, so it needs a way of securing these items. It was also not ideal to access the storage compartment; it was dark and hard to see where the painters placed their items, it was not used filled efficiently because they couldn't reach all the way inside the storage container, and this also resulted in poor posture (Figure 125, right).



Figure 125. Some features of the robot could be improved

Desired interaction with the robot

Painters approach the robot as a pet or a colleague rather than a tool, and want to get to know the robot and its capabilities. It takes some time to fully trust the robot; it needs to prove its usefulness to them first.

The painters do not want the robot on the narrow scaffolding, as it stands too much in the way. Instead, they want it to stay on the gallery and keep at a preferred distance. This way, the tools and materials are always close to them and it saves them time and effort to get the items they need.

The painters prefer the robot to take on assistant role rather than full automation, so they maintain control over their tasks. The expected intelligence level is one that assists with repetitive and logistical tasks but does not replace decision-making responsibilities.

Painters appreciated the autonomous following and navigation of the robot, but also found it important that it is possible to take manual control over the robot with a physical joystick to adjust the positioning of the robot. The painters acknowledged the necessity of human intervention in certain tasks, such as operating elevators.

They also like to have physical buttons for operating the lifting mechanism and the construction light, so they have more control over it.

Next steps

In conclusion, this study aimed to evaluate the design and explore how painters would modify it to create their ideal robotic assistant. Overall, painters view the current design as promising and believe it has the potential to make their work more efficient and less physically demanding. There are some points of improvements to be made to the design based on the gathered insights. These design improvements are elaborated in Chapter 7.4. The improved design is then explained in Chapter 7.5.

7.3.5 Discussion

This discussion reflects on the user study method used in the research. It reflects on the set-up of the user study, the challenges faced during the study, and the different methods of engaging the participants. The insights gained from this discussion can inform improvements for future user studies for this project or for other designers that want to use this method.

One main researcher supported by two research assistants
The researchers had many tasks during the user study; guiding the conversation, making pictures, recording audio and controlling the robot. It became clear that more hands were needed.

Ideally, there should be three roles: one main researcher that guides the main conversation, one person to record audio, photos, and videos while also sometimes helping with questions and keeping the conversation going, and one person to control the behaviour of the robot. Keeping the conversation active was important, so having two people focusing on this aspect was useful.

Active role of the robot
There were not many scenarios where the robot played an active role and initiated an action, like turning its back to the storage container for easier (un)loading. To improve engagement, it is also possible to prompt the participants by actions of the robot to see their reaction. It would also help to prepare sub-scenarios where the robot performs certain actions, which could be pre-programmed.

Reflecting on the functionalities and interaction
The painters reflected on the functionalities of the robot after interacting with them in the different scenarios. The prompts helped the painters to better express their preferred way of interacting with the robot.

Participants aren't used to creative thinking
Some participants found it more difficult to engage in the role play to collaborate with the robot. The painters are not used to this creative thinking, talking about emotions and they are not up to date about the latest technologies, so they found it difficult to come up with their own ideas for new functionalities that the prototype did not yet have. It helped to give the participants some example features, to help them with the creative thinking process to come up with new features.

Staying neutral and not too dominant
As the main researcher, it was important to remain neutral during discussions. This is challenging as you want to support the participants with prompting questions, but you don't want to become too dominant in the conversation. Sometimes you can keep silent and see what the participants will start talking about.

Useful tool for concept evaluation
Overall, bringing the prototype to the context and let the painters interact with it was a useful tool to get insights regarding the desired interaction and evaluation of the functionalities. It helped the painters to reflect on the concept.

Automation makes the product come alive
The fact that it could be remote controlled from a distance, rather than manual control, made it easier for the participants to get into the roleplaying and reflect on the design. The ability to control it remotely gave it a sense of character, and made the idea of a robot assistant helping out more realistic. The participants appreciated this.

If the researcher had needed to push or lift the robot, it would not have given the same effect and it would be more difficult for the participants to imagine new ideas.

Prototype vs sketches
Showing a sketch of a concept is already useful for reflecting on a design, but using a prototype with working mechanisms was even more effective in helping participants imagine and reflect on the design.

Personal take-aways co-creation session

Performing the co-creation session with the users turned out to be a really effective and accessible way for the painters to evaluate the robot. It was easy and visual and they didn't need any designer skills or technical knowledge. They just shared what they liked, what they didn't, and what else this "thing" in front of them could potentially do. That made it a low-barrier method that naturally encouraged design thinking, even from people who aren't used to working in a creative or conceptual way.

Especially with the older painters, as they might not be up to date with what is already possible with technology right now. The painters were skeptical at first, but once they saw the robot following them and using the lifting mechanism, their attitude shifted. They started to believe it could really work in their day-to-day environment.

I think this kind of hands-on, scenario-based testing could be useful for other designers too. It's a great way to gather ideas for new functionalities, to see what kinds of interactions users prefer, and to get a sense of how well a concept would be accepted in a real-world context.

7.4 DESIGN IMPROVEMENTS

This chapter summarises the design improvements based on the insights gathered from the co-creation session described in Chapter 7.3. Chapter 7.4.1 describes the design improvements individually, along with the reasoning behind them. Chapter 7.4.2 presents the updated design with the integrated improvements.

7.4.1 Design improvements

Adapted and new functionalities

1. Slightly wider storage compartment
To fit the commonly used 10 litre paint bucket with a diameter of 30,5 cm. The current distance between the actuators is 25 cm, so this distance will be increased to 32 cm.

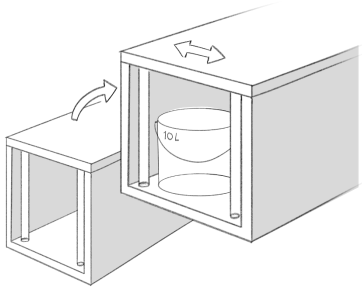

2. Slide-out storage compartment
For better access to the storage compartment and to load it in more efficiently. To prevent bad posture when (un)loading the robot.

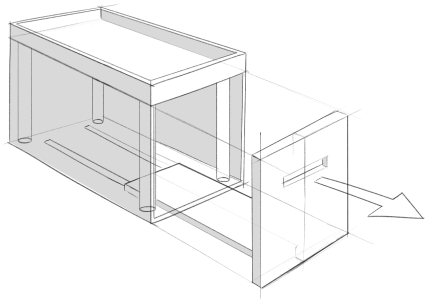

3. Small light to light up storage compartment
To give more visibility when (un)loading the robot.

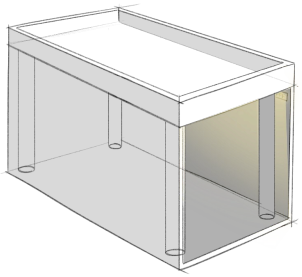

4. Tray to put smaller tools
The tray is designed to store small tools like brushes, screwdrivers, sandpaper, and paint scrapers. It is attached to the worktop and lifts simultaneously, ensuring easy access even when standing on a ladder.

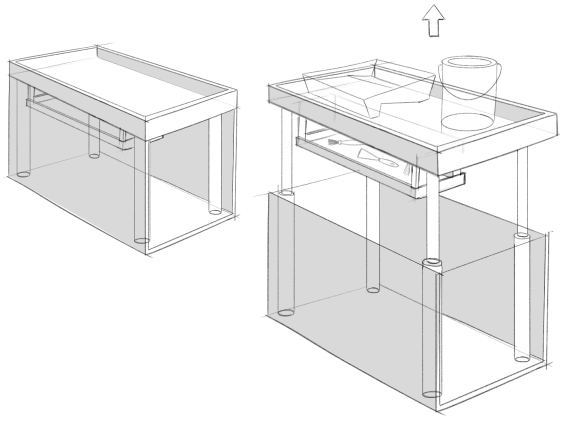

5. Charging module inside storage compartment
To protect the charger and the battery against the weather. It can also hold a spare battery, so the painter always has a charged battery available.

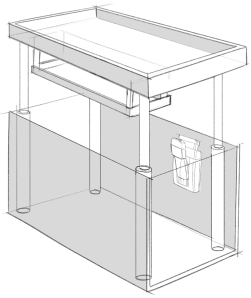

6. Trash bag
To collect the trash throughout the workday and to keep the workspace clean. Also save cleaning time.

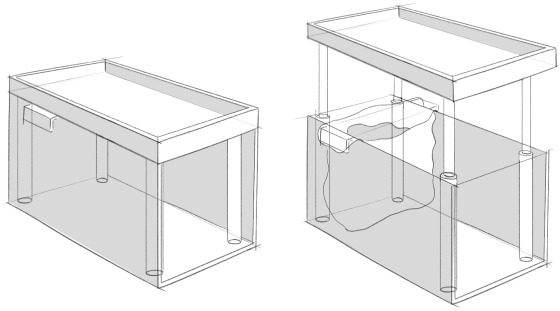

7. Secure materials during transport
Securing the the materials on the top and in the side wing will prevent them from falling out of the robot during transport. This also reduces the chance of damaging tools and materials, and reduces the safety hazard of falling objects.

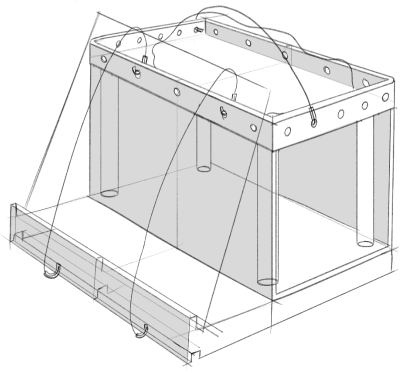

8. Foldable side wing
The foldable side-wing can be unfolded to carry large materials. It is also able to extend in width, depending on the needs of the painter. If the painter does not need the wing anymore, it can be collapsed and becomes more compact.

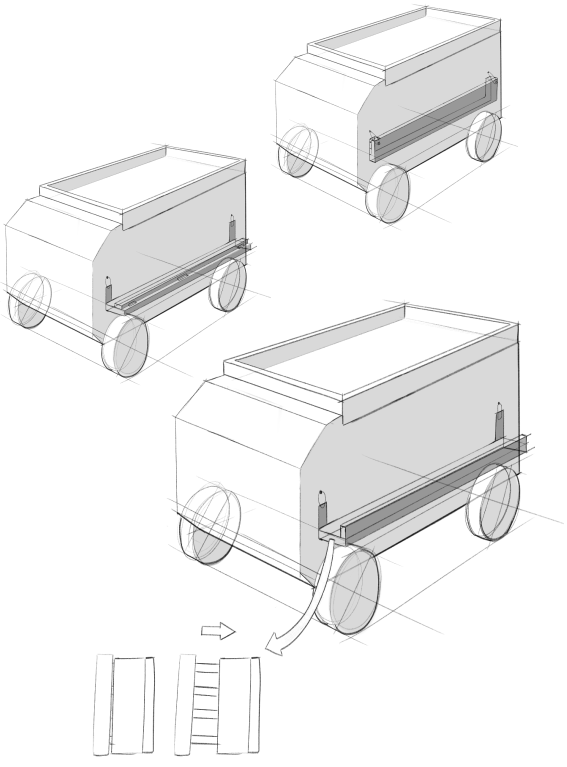

9. Adjustable angle of the construction light
The construction light is secured on a beam using a pipe clamp, making it possible to rotate the light around the beam and change the angle. This also makes cleaning and repairing easier.

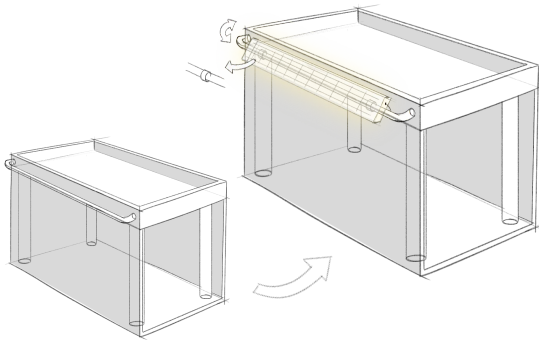

10. More robust design
Painters will not be gentle with handling the robot. It needs to be and look robust. It also needs bigger wheels to overcome obstacles.

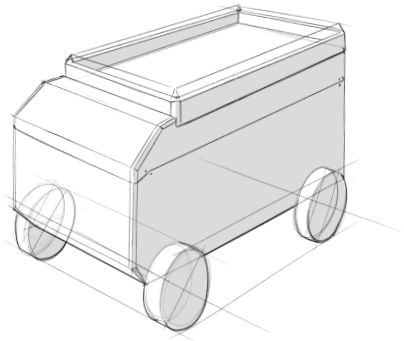

User interface

11. User interface - Home screen
Most important information is shown in the home screen: General statistics, Robot commands and Weather statistics. Painters can click on them for more detailed information. It also tells the time.

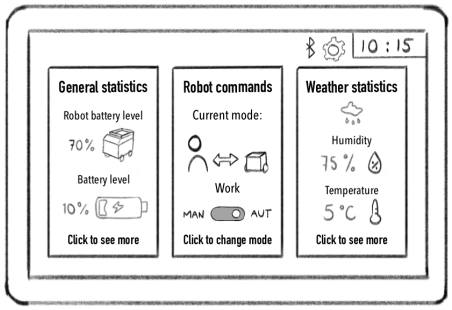

12. User interface - Different modes
The painters can select the desired behaviour of the robot by choosing one of the modes. The modes can also be changed using voice commands. The preferences for each mode can also be altered.

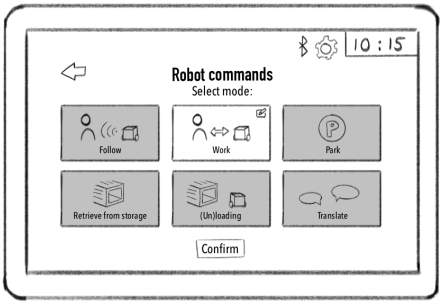

13. User interface - Changing mode preferences
The painters can adapt their preferences for each mode. These modes can be saved for each painter. The preferences can also be changed using voice commands.

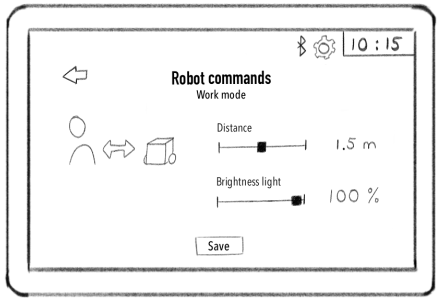

14. User interface - Switch to manual
The painter is able to switch between manual and automatic mode. In manual mode, the painter can adjust the location of the robot manually using a physical joystick. There is also a physical Manual-Automatic switch.

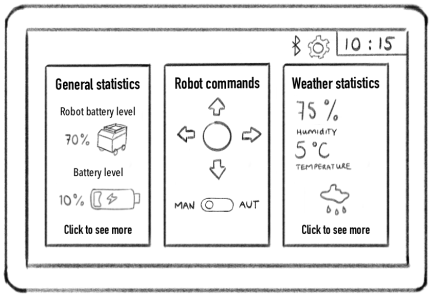

15. User interface - Weather advisor
The robot showcases useful information about the weather.

The painter is able to turn on and off weather notifications.

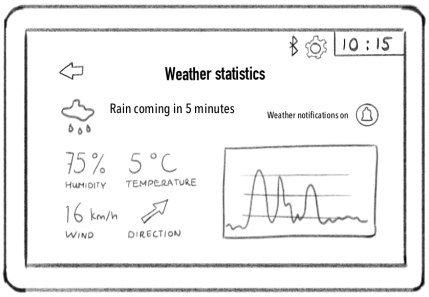

16. User interface - Translate-mode
The robot can be set to translate mode to translate conversations between painters and tenants.

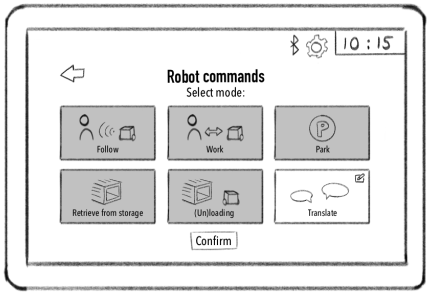

17. Physical buttons and battery indicators
Figure 126 shows the buttons and switches for the new user interface:

1. Battery indicators
2. Up-down buttons for the lifting mechanism
3. Icons to clarify the purpose of the buttons and switches
4. On-off switch construction light
5. Switch manual-automatic
6. On-off buttons for the robot
7. Key to (un)lock robot
8. Emergency button

18. Locking the robot
To use the robot, you need to unlock it with a key. When the key is out, the mechanisms are blocked except for charging the batteries. During breaks painters can leave the robot at the site and only take the key with them.



Figure 126. User interface

7.4.2 Improved design

The improved design (Figure 127) includes a light that can be adjusted and rotated around a beam. It clips onto the beam, making it easy to replace if it breaks. The new design has an improved user interface, with both an interactive screen and physical buttons. A foldable wing has been added so painters can carry large materials or fold it away when not needed. Gaps in the railing allow items to be safely secured during transportation on the top and in the wing. To enhance visibility and safety, the design now includes headlights and rear lights. These not only make the robot assistant more visible in the workspace but also indicates when it is braking, helping to prevent collisions.

The new design also features an attachment for trash bags, a battery charger, and a physical joystick for controlling the robot in manual mode.

Below the worktop, there is a small tray for storing smaller tools. The storage container now includes a drawer for easier loading and unloading. Additionally, a light inside the storage compartment automatically turns on when opened, making it easier to see inside.

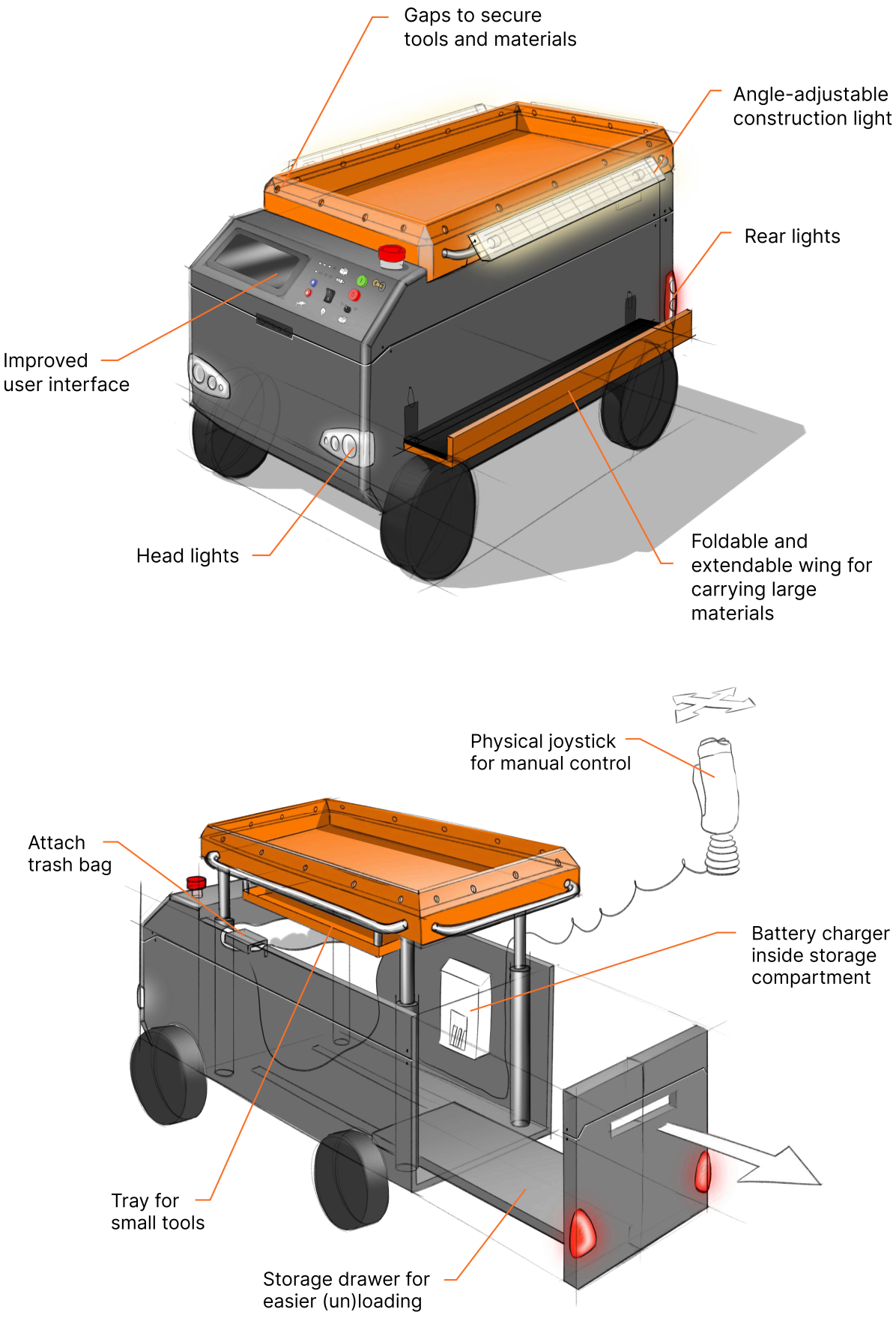

Figure 127. Updated design

7.5 INTERACTION

The co-creation session described in Chapter 7.3 provided valuable insights for designing the desired interaction between the robot and the painter. From these insights, a storyboard was created (Chapter 7.5.1). In Chapter 7.5.2, an user study is performed to evaluate the storyboard and the designed interaction with the painters.

7.5.1 Storyboard

The storyboard (Figure 128-130) explains the collaboration between the robot and the painter in a day of work.

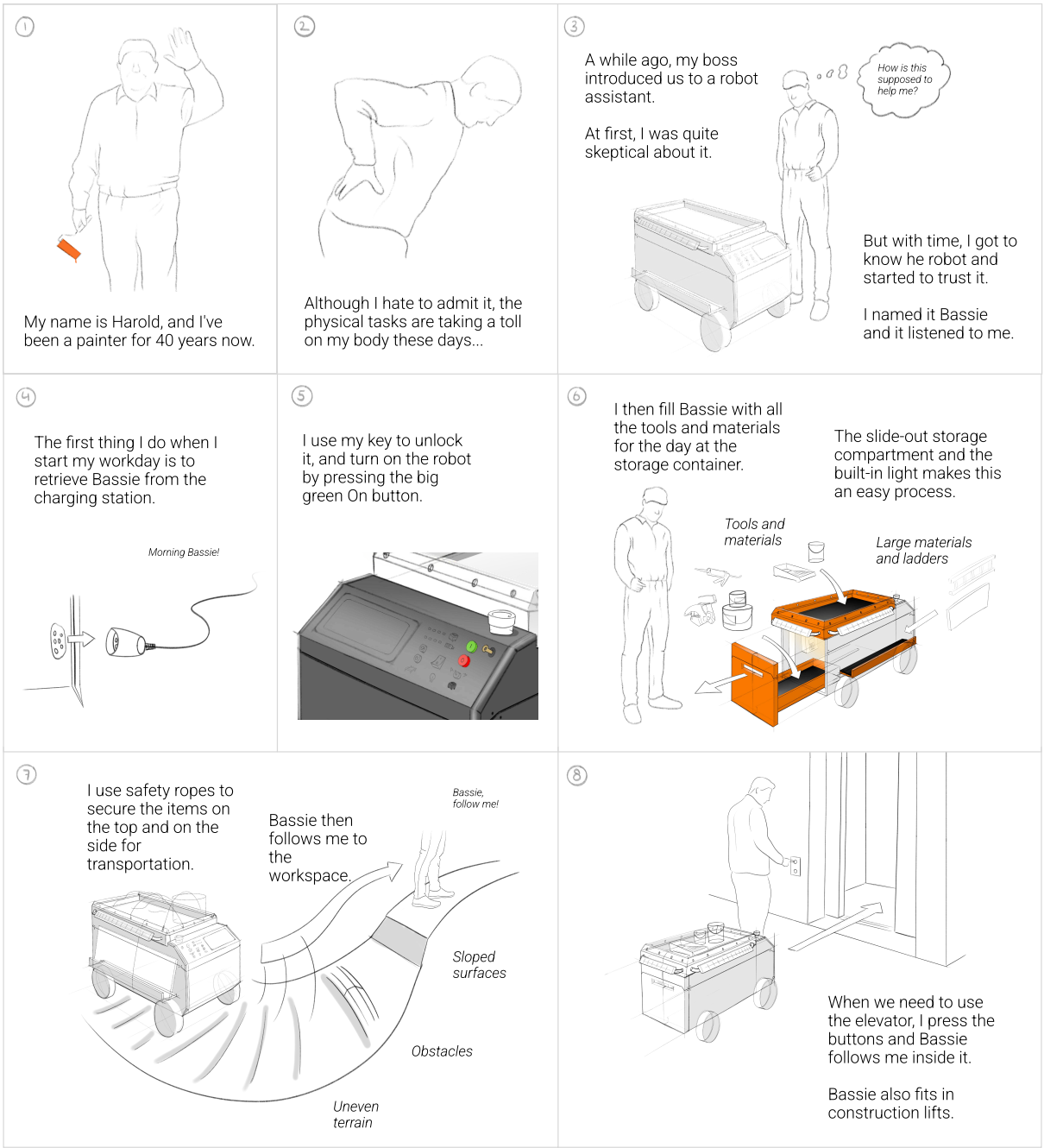

Figure 128. Storyboard

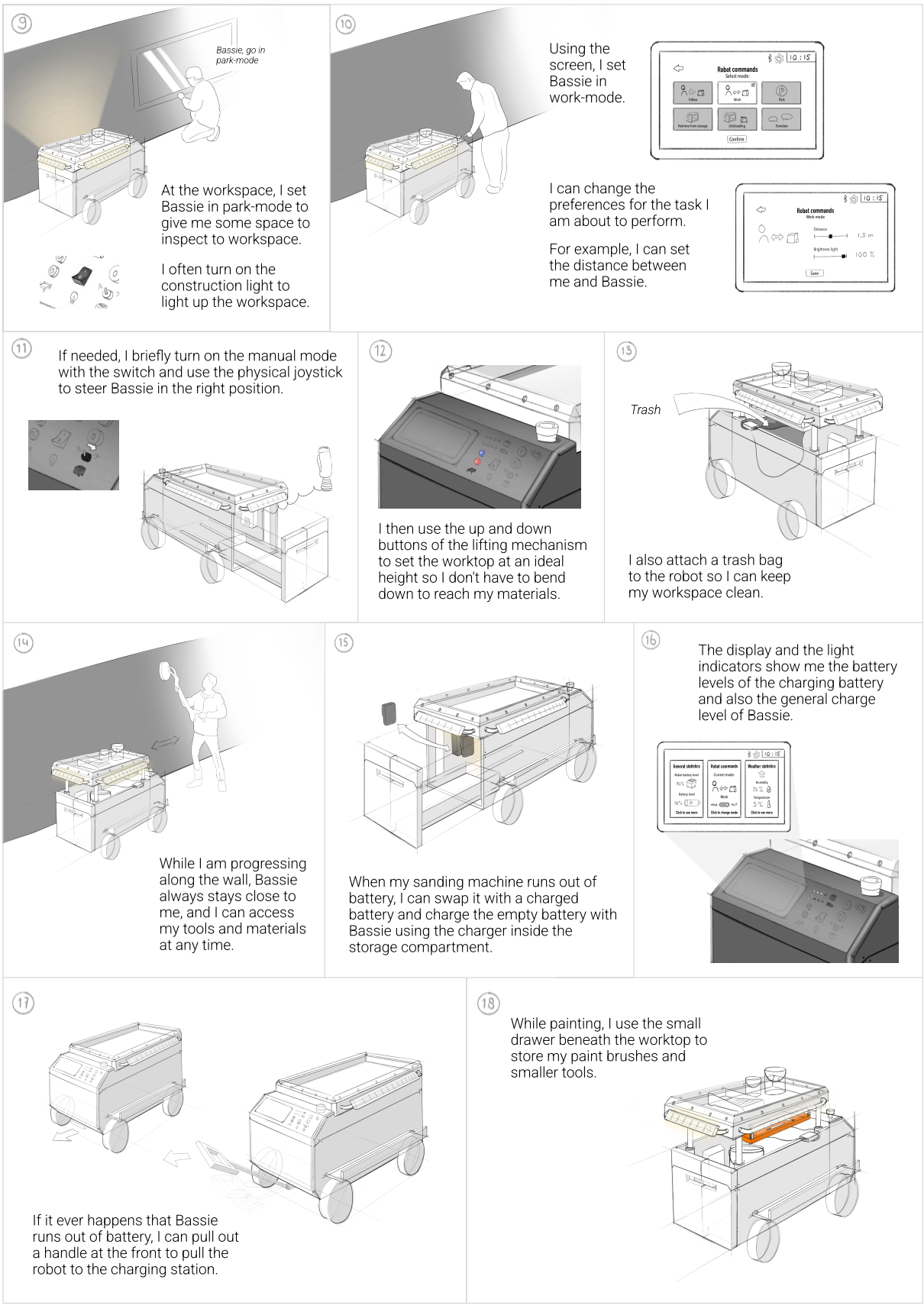

Figure 129. Storyboard

19

It sometimes happens that I run out of paint or that I forgot something at the storage container.

When this happens, I can send Bassie to pick it up for me at the storage container.

I help him down the elevator or construction lift and I can continue working, while Bassie retrieves my request.

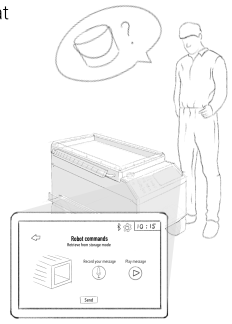

20

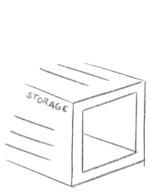

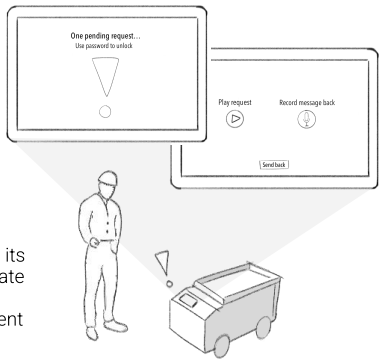

Bassie can drive back to the storage container on its own and can communicate my request with my colleagues that are present at the storage container.

21

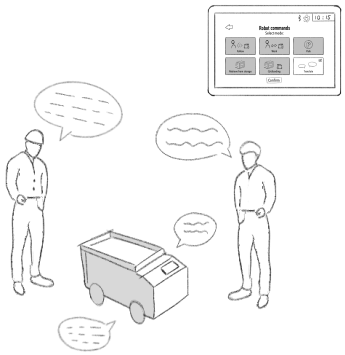

Bassie can also assist with translating to help with communication between colleagues and of tenants.

22

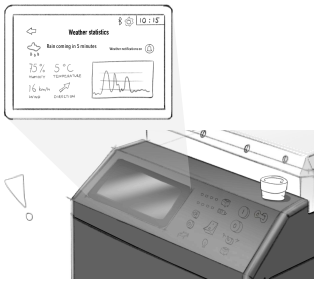

If I ask it to, Bassie can give me alerts when the humidity level is too high or if it is going to rain soon. This helps me to choose what tasks to perform. The screen shows me more detailed information about the weather.

23

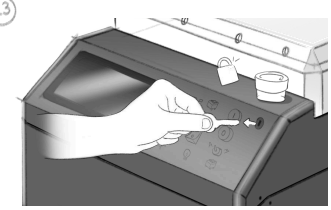

When it is lunch time, I remove the key to lock Bassie, which disables the wheels, screen, buttons, and locks the storage compartment. While locked, it can still charge the battery of my sanding machine.

During the lunch break, I leave Bassie on the gallery with my tools and materials safely stored inside.

24

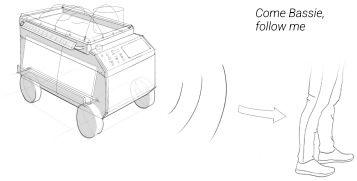

When the workday is over, Bassie follows me back to the storage container.

25

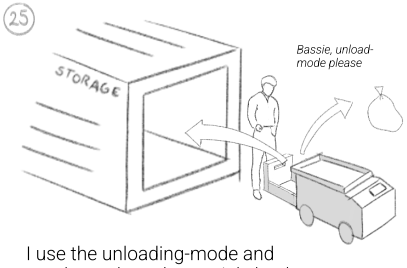

I use the unloading-mode and put the tools and materials back in the general storage container.

I also throw away the trash.

26

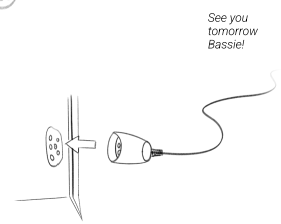

Finally, I say goodbye to Bassie and leave it at the charging station.

27

Because of Bassie, the work has become less physically challenging. I don't have to carry around my tools and materials anymore.

I also don't have to bend down as much as I did before.

Without the physical complaints, I am able to enjoy my work for a longer time.

27

It also saves me time.

Bassie always stays close to me so everything is within hands reach.

And if I forget something or run out of paint, I can continue working while Bassie retrieves my request.

27

Bassie helps me with other challenges to make my day easier and more comfortable; it lights up the workspace, it charges batteries, it alerts me for incoming rain, and it helps with overcoming language barriers.

27

It's easy to collaborate with Bassie. I can even personalise the settings of the different modes or take over manual control if I ever need to.

Bassie can assist throughout the entire painting process.

In short, Bassie is my ideal robot assistant!

Figure 130. Storyboard

7.5.1 Evaluating interaction

To evaluate the designed interaction, a small user study was performed with two painters and a project leader. This chapter explains the research goal, the method explaining the approach and required preparations, the results, a conclusion that summarises the insights, and finally a discussion and recommendation section that reflects on the methodology and gives recommendations on how to improve it for future studies.

Research Aim

The goal of this study is to evaluate the designed functionalities and user interactions. From the insights of the study, design improvements will be made to improve the overall user experience. The insights will also provide new requirements for the robot's final design.

Method

Participants

For the study, two all-round painters participated in the activity, of which one younger painter (aged between 25-54) and one older painter (aged between 55-64). Both painters work for the same company. The project leader was also present but remained in the background unless directly addressed with specific questions. This approach was taken to prioritise the painters' perspectives, as they are the end-users who will ultimately interact with the robot. However, the project leader's knowledge was valuable in certain areas, such as regulations and project monitoring.

Tools and equipment

For the study, the following materials were needed:

1. Consent forms
2. Printed robot and functionalities A3
3. Printed storyboard A3
4. Green, yellow and red dots (stickers)
    - ~25 dots per colour per painter
5. Pens
6. Paper
7. 2 phones
    - 1 for audio recording
    - 1 for taking pictures



Figure 131. Adapted storyboard

An adapted storyboard was used for the study, which can be found in Appendix T. It was translated to Dutch, as older painters often struggle with English, the introduction of the painter and the final advantages were excluded, and empty panels were added where the painters could write down their own concerns and perceived advantages (Figure 131).

Procedure
The experiment started with an introduction of the researcher and the research. Then the participants were asked to consent to participate in the research. In the consent form, it is explained how the researcher handles the data, if the participants give permission to use the data for this study, and the rights of the participant to stop the study at any time, without any reason. When the consent was given, the audio recording started.

The researcher then briefly introduced the current design and purpose of the robot, using the printed paper of the robot design (material 2). The researcher laid out the first page of the storyboard and explained the upcoming activity.

Both painters received their own green, yellow and red dots. The researcher led the painters through the storyboard, explaining each panel step by step. As they followed along, the painters were asked to reflect on each panel out loud and use the dots to evaluate the functionalities and interactions. The green dots indicated that the functionalities or interactions made sense, yellow dots indicated concerns, and red dots were used if something does not make sense to them. Finally, after going through all the panels, the participants were asked some final questions to reflect and write down their concerns and perceived advantages in the empty panels.



Figure 132. Painters evaluating the panels of the storyboard (left) and writing down their concerns and perceived advantages in the empty panels (right)

Data processing and analysis
For the quantitative results, the printed storyboard with dots was photographed at the end of the session to indicate points of improvements (yellow and red dots) and interactions that were intuitive according to the painters (green dots). For the qualitative results, the audio recording of the user study was transcribed and analysed in a step-by-step process (Burnard, 1991), where interview quotes are highlighted and clustered together to create insights. Any personal information was anonymised. After transcribing the interview, the audio recording was deleted. The findings from both the qualitative and quantitative results were combined to draw conclusions.

Quantitative results

Figure 133 shows the storyboard with the coloured dots. Overall, a lot of panels received green dots, counting 40 of them in total. The participants did not use the red dots, and used the yellow dots four times. The four yellow dots were given because of the following reasons:

- Using the display rather than using voice commands (panel 6)
- Concerns about the autonomous following (panel 8)
- Concerns about protecting the buttons and display (panel 13)
- Suggestion to charge robot at the workspace instead of only at the charging station (panel 14)

The concerns and perceived advantages will be elaborated in the next section qualitative results.

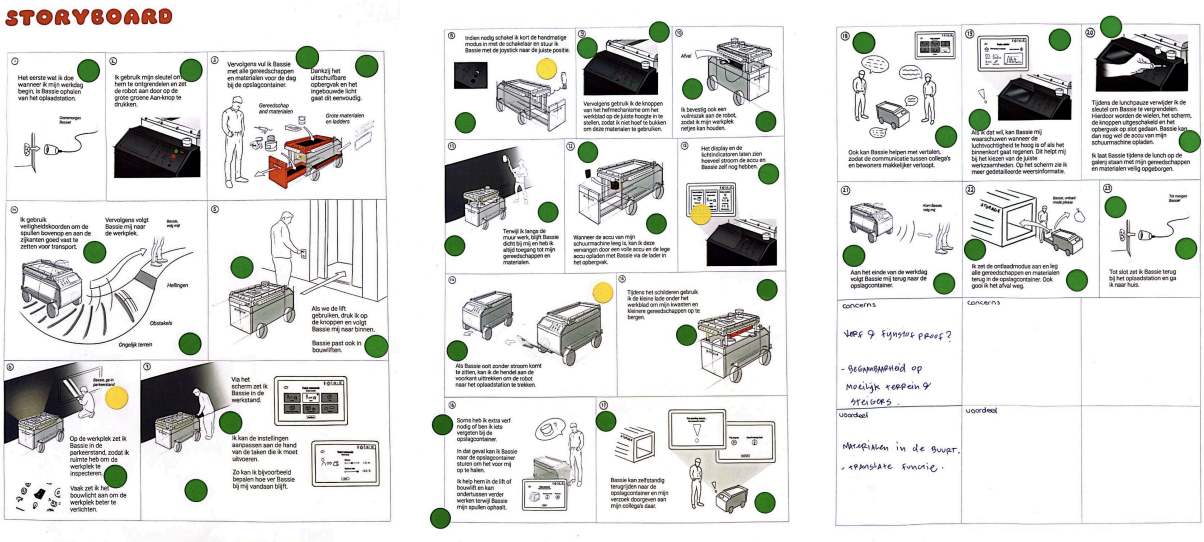

Figure 133. Storyboard evaluation

Qualitative results

The qualitative results are insights gathered from analysing the interview transcript (Appendix U). The insights are substantiated with quotes from the younger and older painters and the project manager.

The insights are clustered in six categories: effectiveness in different work environments, safety, perceived advantages, concerns, suggestions new functionalities and considerations for adoption.

1. Effectiveness in different work environments

1A. Not for narrow scaffolding
Not suitable for narrow scaffolding, but usable on wide scaffolding

'If you have a blitz scaffold (narrow scaffold), then the robot is useless. But if you have a wide scaffold, then you can actually make use of it.' – Older painter

1B. Better suitable for larger projects and charging robot in storage container
The robot is less suitable for small projects and more suitable for larger projects. Larger projects also provide space and electricity to charge the robot overnight in the storage container.

'At this location, it's difficult because it's relatively small, and we only have one power outlet. On larger work sites, we do have the facilities because we also have electricity in our storage container. There, we can make room for the robot, we have plenty of space. The robot can simply charge overnight.'
– Older painter

'Not in the break area [talking about where to charge the robot], just in the storage container.' – Older painter

2. Safety

2A. The robot should be aware of the environment
To make sure the robot does not cause incidents at the worksite, the robot should be able to detect obstacles, and moving objects like cars or humans. The robot should be able to steer around the obstacles or make emergency stops to avoid collisions.

'I wonder if the robot takes public roads into account, so it doesn't just cross an intersection. Is the robot aware of whether it's on a sidewalk or a bike path? It needs to follow the rules. It should be aware of its surroundings, not necessarily to assist us with work, but for overall safety, including avoiding potential damage by not crashing into things.' – Younger painter

2B. Locking system with physical key
For securing the robot when left unattended, the painters liked the idea of locking it with a physical key. It is similar to what they do with cherry pickers. The key would be attached to their keychain.

'It's basically the same as what you do with a cherry picker. You leave your tools inside, take the key out, and it's still there after the break. (...) Everyone can just keep the key on their keychain.' – Younger painter

3. Perceived advantages

3A. Less walking required to transport materials
The painters mentioned that the robot can carry a wide range of tools and materials, reducing the number of trips needed to and from the storage area. This is especially useful when multiple tools are needed at once, such as paint, filler, sanders, or small ladders.

'It can carry all the tools I need in one go. (...) You often need to make two trips to bring everything. It's useful when you need multiple tools—caulking, paint, a sander, a small ladder. The robot carries everything for you, which is ideal.'
– Younger painter

3B. Materials always within reach during work
Painters found it especially useful to always have their tools nearby during tasks like sanding, filling, or caulking. The robot acts as a portable workbench, helping them work more efficiently.

'Mainly, it's great to always have your materials nearby.' – Younger painter

'Now, you just have everything with you, it's like a portable workbench.'
– Younger painter

'If you're painting a ceiling, you can put the heavy paint bucket on the work top and keep going without stopping.' – Older painter

3C. Less physical strain from carrying materials
By letting the robot carry heavy tools and materials, the painters feel less strain on their bodies throughout the day.

'The robot carries everything for you, which is ideal. It reduces the need to lift and haul materials.' – Younger painter

3D. Less bending during painting tasks
Having the robot follow along while painting makes it easier to access tools and paint without constantly bending down, reducing strain on the back.

'For rolling paint, having the robot nearby is also helpful. Normally, you'd have to bend down repeatedly. If it moves along while you work, it's ideal.' – Older painter

3E. Improved communication with the translation feature
The painters see added value in using the robot to support communication with residents or colleagues who speak different languages. It could help avoid misunderstandings on site.

'That's great. We can use it if we struggle to communicate with a resident. We just bring the robot to the front door.' – Older painter

3F Built-in trash bag helps keep the site clean
A built-in trash bag was seen as a practical addition, especially for collecting used tape and other small waste items immediately.

'That's a really good idea [about the trash bag]. When I walk on the scaffold, there's tape everywhere. It would be great if you could dispose of it immediately.' – Older painter

3G Extra drawer for small tools and personal items
An integrated drawer for tools like putty knives or screwdrivers was considered convenient. It could also store personal items.

'A drawer you can pull out easily, for things like putty knives. It's useful for keeping small tools clean, like screwdrivers. (...) 'I could even put my pack of cigarettes in there.' – Older painter

3H Flexible control options for different user preferences
Offering multiple control modes, such as voice control, touch display, or manual joystick, allows painters to choose what suits them best. Older users may prefer manual operation, while younger ones may enjoy using a touchscreen or voice commands.

'Instead of voice control, could it also work with buttons? I'd prefer that.' – Younger painter

'I still have some doubts about the automatic follow mode... If both options are available, users can choose what works best for them.' – Older painter

'Voice control can be useful when you're busy and don't have time to press buttons, you can just call the robot. That makes it a handy feature.' – Younger painter

3I. Access to weather updates on the display
Having weather information available on the robot display is seen as convenient, especially when wearing gloves or working outside.

'There are apps like Buienradar, but then you have to take out your phone, remove your gloves... That's distracting.' – Younger painter

4. Concerns

4A Disturbance caused by voice-command function (yellow dot, panel 6)
The younger painter prefers using the display and buttons over the voice-command option. Especially when work starts early in the mornings, he does not want to bother residents with the noise.

'Especially in the morning when you're working near someone's house at 7:00, you don't want to be shouting commands at a robot. If it doesn't respond, you'd have to raise your voice even more. I'd rather just use buttons.' – Younger painter

4B Concerns about the autonomous follow mode by the older painter (yellow dot, panel 8)
The older painter (painter 2) expressed his concerns about the automatic follow mode, and would rather operate it with the physical joystick. He is concerned that the robot causes issues and, as he would be responsible, it will cause him more time and trouble to fix the issues. The robot needs to earn his trust before trusting the autonomous follow mode.

'Maybe it's always better to control the robot with a joystick instead of having it automatically follow you. You don't always know what it's going to do. With the controller, you're in control; if you stop, it stops immediately.' – Older painter

'If the robot gets stuck, you can always grab the controller. If it works as expected and just follows you, then there's no issue.' – Younger painter

'If there are problems, I'll be the one who has to fix them. The robot has to earn my trust. I don't want it to be a hassle.' – Older painter

'I still have some doubts about the automatic follow mode. I might always prefer to control it manually. If both options are available, the user can choose what they're most comfortable with.' – Older painter

4C Concerns about leaving the robot drive around unattended
The painters and the project leader have concerns about the safety if the robot would independently drive to the storage container to retrieve materials. If something goes wrong, the painters would have to resolve it.

'I'm not sure if you want it driving on the street where anyone can access it. On public roads, I also don't know if it's even allowed to be unattended.' – Project Manager

4D. Concerns about protection against dust, paint, and dirt (yellow dot, panel 13)
The robot will quickly get dirty during use and must be resistant to these conditions.

'I wonder how resistant the robot is to paint and fine dust. That's something we deal with daily.' – Younger painter

When painting with a roller, the robot will get covered in paint splatters. You'd need to protect it well, maybe with a protective layer you can remove daily.' – Older painter

'All the buttons must be well-protected, like on a scissor lift. It needs to be durable.' – Younger painter

4E. Material retrieval must be faster than manual pickup
While the ability to send the robot to retrieve materials from the storage container was seen as potentially useful, painters said that it must save time to be worthwhile.

'If I need a small can of paint and the robot takes 20 minutes, I might as well go get it myself." – Older painter

'It would be useful to send the robot in advance and then call someone in the site office. If that speeds things up, then it's a good option.' – Younger painter

4F. Robot not suitable for relaying messages
Using the robot to deliver messages between team members was not considered effective. Painters would rather shout or give them a call.

'I don't think that's efficient. I'd just shout or call them instead.' – Older painter

5. Suggestions new functionalities

5A. Language settings to support multilingual teams
Painters suggested including language settings to accommodate team members who speak different languages or dialects. A control panel or translation function would help improve usability for non-Dutch speakers.

We also have guys with different dialects—Polish, Bulgarian. They struggle to give commands in Dutch. They would be better off using a control panel. Or there should be a translation function. – Older painter

You can also set it to Polish, right? That you can adjust the language settings. Some projects have up to 60% Polish workers. – Younger painter

5B. Give confirmation of the given commands
With a display, painters could immediately see if a command was processed. For improving the voice-command functionality, the robot should also respond with a confirmation so the painter know their command is processed.

'What I like about the display is that you can immediately see that your command has been processed.' – Younger painter

5C. On-site charging capability (yellow dot, panel 14)
The ability to charge the robot on-site using an extension cord was proposed as a practical solution in case the battery runs low during the workday. This avoids the need to tow the robot back to a charging station. The handle bar can still be used to move the robot for short distances.

'Can you also charge the robot on the go? Like if you only have 30% battery left... can you just grab a power reel and charge it on the worksite?'
– Older painter

'Or if you're at a resident's house far from the storage container, you could just plug it in there.' – Project Manager

5D. Simple, intuitive display for accessibility
Painters emphasised that the control interface should be easy to use, particularly for older workers who may not be comfortable with digital systems.

'It shouldn't be too complicated to give the robot commands. If you have a remote control, it should only have three buttons: follow, stop, and move.'
– Older painter

5E. Storing weather data for documentation
The project manager expressed interest in storing weather data (e.g. temperature, humidity) to help explain delays or address quality concerns post-project. This data could serve as evidence for warranty or performance-related issues.

'Ideally, you'd want to store that weather data. For performance requirements, we need to prove that if there are issues with the paintwork, we can check what the temperature and humidity were.' – Project Manager

5F. Daily weather forecasts to improve planning
Painters would benefit from the robot providing a morning weather forecast to help determine whether conditions are suitable for painting.

'If the robot already knows the humidity in the morning and whether it's suitable for painting, that would be really useful.' – Older painter

6. Considerations for adoption

6A. Affordability compared to existing tools
The project leader sees a price range between €2,500 and €3,500 as acceptable, comparing it to other professional tools like exoskeletons.

We're definitely going to buy it. How much should something like this cost? If I had to guess, somewhere between €2,500 and €3,500? An exoskeleton costs about the same, so we should aim for that range. – Project Manager

6B. Buying is preferred over renting.
Buying the robot is preferred over renting, as the initial investment is seen as manageable. Renting is typically reserved for much more expensive equipment like scaffolding or cherry pickers.

I think buying is better. The investment isn't big enough to justify renting. A cherry picker costs around €150,000, so you rent it. But for this? No need. – Project Manager

You can buy four of these and rotate them across different projects. You won't use the robot on every project if it doesn't provide much benefit. That's why you don't need 30 of them right away. Start small. The most important thing is that the robot is always in use so it pays for itself. – Project Manager

Conclusion

This study evaluated the designed functionalities and user interactions between the painter and robot. The study showed the strengths and advantages of the current design and also showed areas that could be further improved.

Overall, the painters were positive when going through the storyboard. The key advantages of the robot were its ability to reduce physical strain by assisting them with carrying materials and lifting the materials so the painters did not have to bend as much. Another benefit was that the painters always had their materials within reach, which boosted overall efficiency. Controlling the robot accommodates for personal preferences of the painters, allowing them to control it by voice, using the screen or buttons, and choosing between the manual and autonomous mode. Other functionalities, like the small tool drawer, the weather information and translation mode assisted with other challenges the painters come across in the workspace.

However, the painters also had some concerns about the robot. Especially the older painter had concerns about the autonomous follow mode, worrying that it would cause incidents and more hassle to fix these issues. He preferred using the physical joystick instead, or the robot needed earn his trust first to trust it with the autonomous following. The younger painter would use the follow-mode, but highlighted the need for the robot to be aware of the environment to avoid collisions. The younger painter also preferred using the display instead of the voice-commands, worrying about noise complaints from tenants. The painters were also concerned about protecting the robot from paint and fine dust, and about it being robust enough to overcome obstacles and different terrain. Both the painters and the project manager also had doubts if it was wise to let robot drive to the storage container on its own, and if it would be time efficient to let the robot collect the items or if it would be faster to do it themselves.

The suggested functionalities and design improvements aim to make the robot easier to use and more helpful on the job. The ideas include adding language settings so it can be used by teams who speak different languages, giving clear feedback through a screen or voice when a command is received, and making sure the robot can charge on-site. It would also be helpful if the robot could show weather updates and give advice at the start of the day to help with planning. Additionally, if the weather data could be saved for documentation, it would be valuable for proving delays caused by environmental conditions.

The insights gathered from the study will be used to make the final design of the robot assistant, which is presented in Chapter 8.

Discussion and recommendations

The study using the storyboard to explain the functionalities and the interaction proved a useful tool for finding out design improvements, and the perceived advantages and concerns of the users.

The inclusion of both a younger and an older participant in this study was insightful, as it provided a range of perspectives and showed the generational differences in the use of technology and preferred interaction. Performing the study with both participants simultaneously, helped them to think out loud and respond to each other's opinions. It is important to ensure that both participants are equally contributing to the activity. More prompting questions can be asked to the participant if they are less active during the interview.

Limitations and recommendations
The storyboard reflects a typical work day of painters. It is important to note that some activities may have been overlooked in the process. While previous interviews provided a foundation of knowledge regarding the painters' daily routines, the diversity of tasks and contexts encountered in a painter's day means that additional scenarios could emerge. Therefore, it is essential to incorporate reflective questions at the end of the study, prompting participants to consider other situations where they might see the robot providing support.

Another limitation of this study lies in the fact that the storyboard presented the preferences of a single painter, yet the robot is designed to accommodate various interaction preferences. Future studies using storyboards to evaluate a robot's design could benefit from creating multiple versions of the storyboard, showing different ways painters could interact with the robot. This way, the participants can imagine the different possibilities and express their desired interaction.

Another limitation of the study is the small sample size, with only two painters participating. To gain a more representative understanding of user needs and preferences, future studies should involve a larger group of participants, potentially from different painting companies, to capture a wider range of experiences and insights. This would help validate the findings and check if the robot’s design aligns with the diverse needs of the painting industry.

The presence of the project manager during the interview could have unintentionally influenced the answers of the participants. While the project manager's insights on regulations were valuable, it could be helpful to conduct separate sessions. One with the painters and one with the project manager.

7.6 AESTHETICS

This chapter explains how the embodiment of the robot is designed to align with the aesthetic preferences of the painters. In Chapter 7.6.1, the evolution of the current design and the design choices that were made are discussed. Chapters 7.6.2 and 7.6.3 describe the methodology developed to gather information about the painters' aesthetic preferences and the user study that was conducted with it. Finally, Chapter 7.6.4 explores the aesthetics of the robot by combining the current design with the desired aesthetic qualities.

7.6.1 Evolution of the aethetics

The first embodiments followed from the ideation, which were mainly guided by the functionalities of the robot. AI generations were also used when creating the seven concepts as an inspiration for the robot's shape (Appendix O). After choosing a design direction and adding or changing the functionalities, the embodiment changed as well. The shape was also explored with different SolidWorks models (Appendix Q).

The prototyping process also adapted the embodiment and placement of components, for feasibility and practicality. For example, the door opens in a different way to save space on the scaffolding, and the robot has four actuators instead of two to prevent the worktop from breaking when force is applied, for example if the painter leans on it. A co-creation session was conducted using the prototype, which again led to changes in the embodiment. Based on this session, certain functionalities were adjusted, like the position of the battery charger and the adjustable LED strip, and new features were added, like a physical joystick and front- and backlights. The insights gathered about desired interaction also changed the look and feel of the user interface.

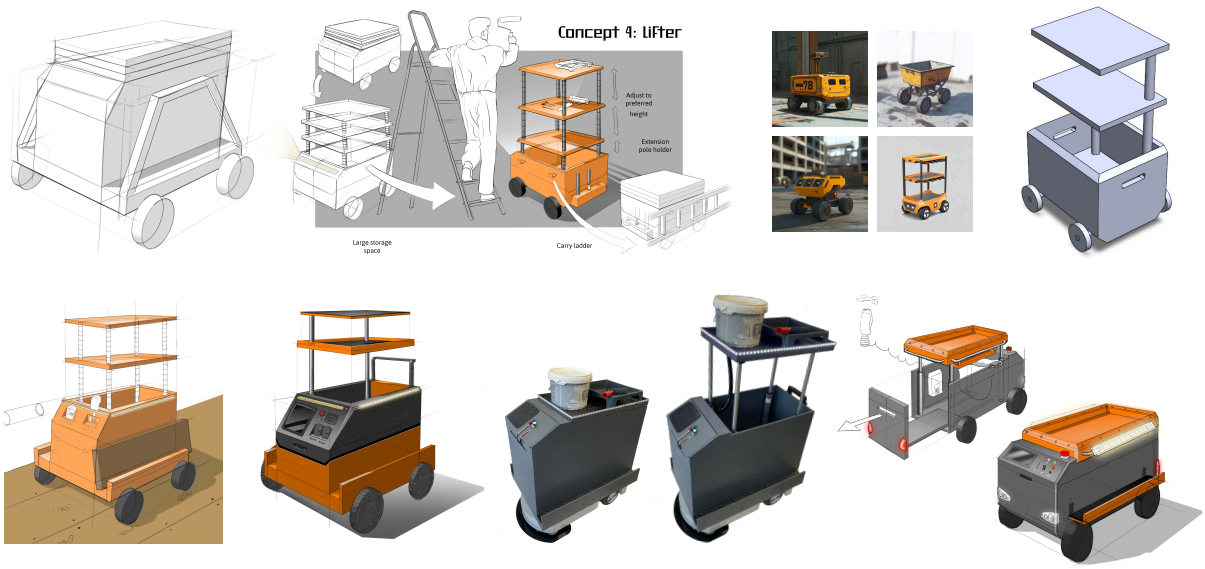

Figure 134. Evolution of the embodiment of the robot

7.6.2 Aesthetics quadrants

To determine the aesthetic preferences of painters for their ideal robot assistant, four aesthetic quadrants were developed. The two chosen axes, robust vs refined, and familiar vs novel, create four interesting quadrants concerning the aesthetics of a robot cart.

From previous research, it was concluded that painters can be quite traditional (Muzus, 2024). Based on this, it is expected that they will prefer a more familiar aesthetic that aligns with existing tools and objects they recognise. To test this assumption, novelty was placed at the opposite end of the axis to assess whether painters are also open to new shapes and design aesthetics.

The second axis, robust vs. refined, explores whether painters prefer a sturdy, industrial look or a more sleek and polished design. It also shows whether specific elements of the robot should be more robust, such as wheels and buttons, while other elements of the robot should be more refined. Initially, the term "elegant" was used for this axis, but due to its potential feminine associations, it was changed to "refined" to keep the description more neutral.

These two axes result in four aesthetic quadrants: Familiar and Robust, Familiar and Refined, Novel and Robust, and Novel and Refined. Figure 136 illustrates these quadrants using cars as an example of differing aesthetic directions.

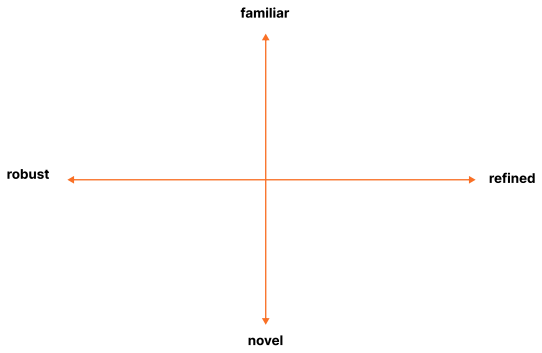

Figure 135. Two axes to describe possible aesthetic of the robot cart

For each quadrant, a mood board was created. Each mood board includes images of reference products, shape inspiration, materials and textures and functional details that are in line with the corresponding quadrant. Each image was carefully selected to reflect the aesthetic characteristics of its respective quadrant.

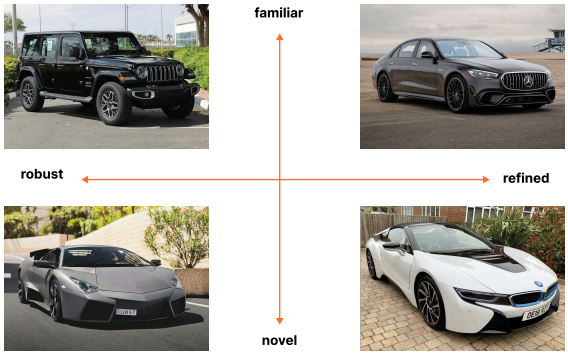

Figure 136. Example aesthetics with cars

Each quadrant and its mood board is elaborated in the following sections. The study that was performed with the mood board is explained in Chapter 7.6.3.



Figure 137. Aesthetics quadrants

Familiar and Robust

The robot is characterised by a rugged, industrial appearance. It looks strong and durable. Its shape is robust and functional, resembling tools and equipment painters already work with, like industrial storage boxes or trolleys. The materials are textured and practical, typically a mix of metal and plastic, built to withstand rough use. The colour palette is mostly black, complemented by bright accent colours like red, yellow, or orange. Functional details include large, protruding buttons and heavy-duty wheels. A mood board of the Familiar and Robust quadrant is shown in Figure 138.

Familiar and Refined

In the Familiar and Refined quadrant (Figure 139), the robot has a smooth and calm look. Its design is inspired by tools and trolleys that painters already know, but with a more polished and refined appearance. The shape is sleek, with soft curves and smooth, flowing lines that give it a calm and friendly look.

The materials are matte and come in warm, neutral colours, with one warm accent colour to add a bit of contrast. It is made out of aluminium, and matte plastics. Functional elements, such as buttons and screens, are neatly integrated into the surface, maintaining a clean and uncluttered aesthetic.



Figure 138. Mood board Familiar and Robust

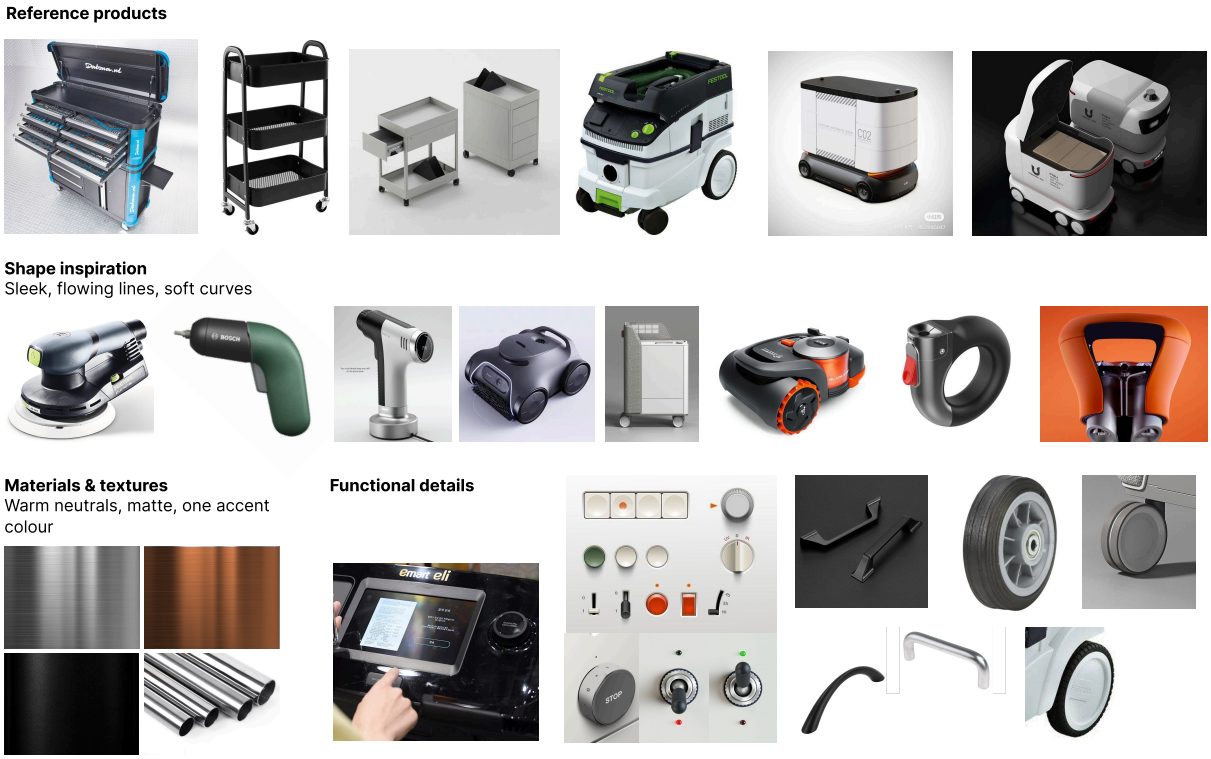

Figure 139. Mood board Familiar and Refined

Novel and Robust

The robot's appearance for the Novel and Robust quadrant (Figure 140) can be described as futuristic, inspired by futuristic looking carts and sci-fi products. The shapes are sharp, geometric, and sometimes asymmetrical. Materials includes brushed aluminium and new materials like carbon fibre. Bright neon lights are used in the design. The functional details include unconventional wheels and buttons, and geometric shaped handle bars.



Figure 140. Mood board Novel and Robust

Novel and Refined

The Novel and Refined quadrant (Figure 141) shows modern, minimalistic and organic products with soft and rounded shapes. The products are made out of soft pastel coloured materials and it has soft lights included in the design. Functional details include sleek buttons, integrated screens, and omni wheels.

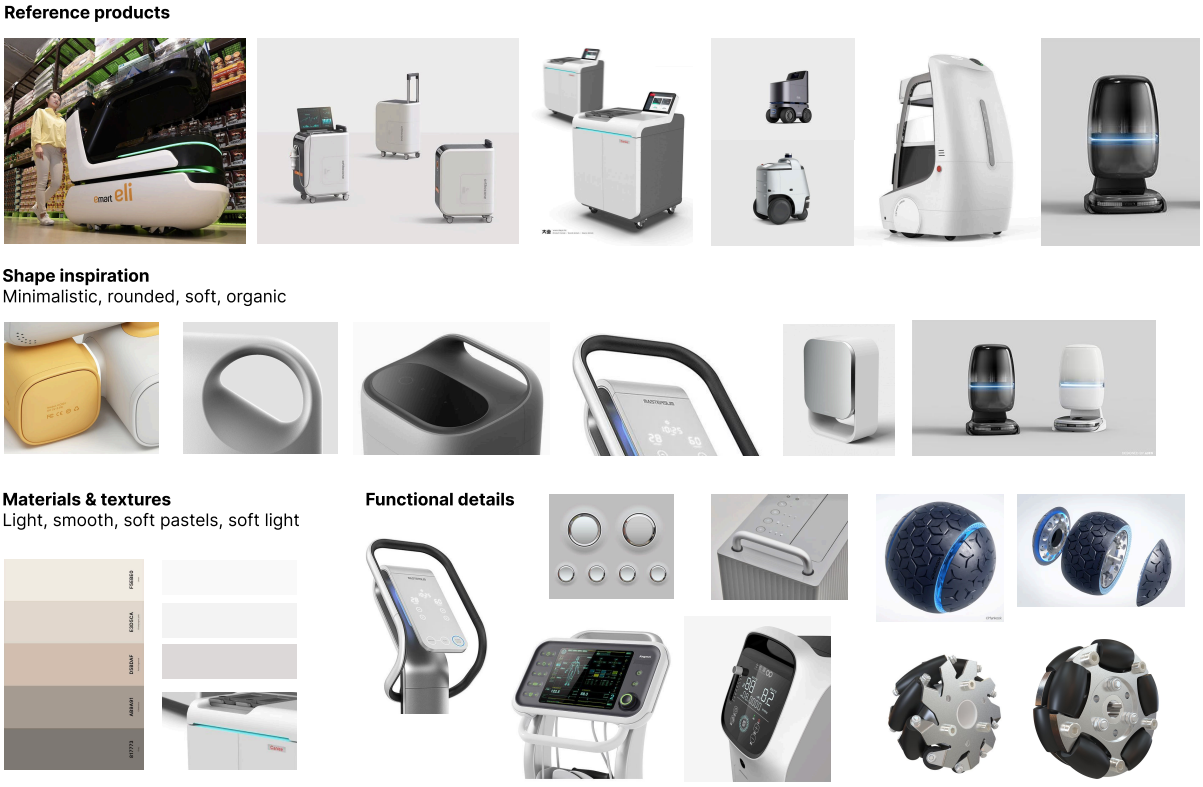

Figure 141. Mood board Familiar and Refined

7.6.3 Evaluating aesthetic preferences

Information regarding painter's preferences regarding the aesthetics was gathered through a short user study using the mood boards and aesthetic quadrants described in Chapter 7.6.2.

Research Aim

The research aim of the study is to find out the painter's preferences about the aesthetics of the robot. The following research questions are formulated:

- *Do painters show a strong preference for a specific aesthetic quadrant, or do they appreciate elements from multiple quadrants?*
- *What are important aesthetic factors that should be considered when designing the robot (e.g., color, texture, material, shape)?*

Method

Participants
For the study, two Dutch male all-round painters participated in the activity, of which one painter was younger (aged between 25-54) and one painter is older (aged between 55-64). Both painters work for the same company. The project leader was also present during the user study. While he was not actively participating in the activity, his expertise was asked sometimes on matters related to safety and regulations.

Tools and equipment
For the study, the following materials were needed:

1. Consent forms
2. 4x empty A3 papers
3. Tape
4. 4x envelopes
5. Cut out images from each mood board
6. Coloured pencils
7. Printed A3 with two axes only
8. Printed A3 of each car from example
9. Printed A3 with axes and car example
10. Printed A3 of axes with quadrants
11. Printed A3 mood board of each quadrant
12. Pen and notebook
13. Phone to record audio and make pictures

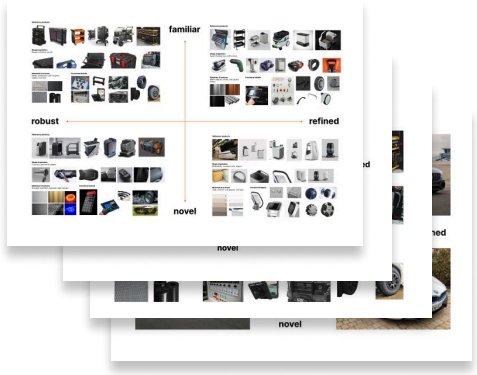

Figure 142. Materials

The materials were translated to Dutch, so that the older painter could also understand if he had difficulty understanding English. The Dutch materials for this study can be found in Appendix V.

Procedure
Rather than the painters choosing a quadrant, the painters first evaluated the individual images of the mood boards, without knowing about the underlying quadrants.

In preparation of the study, the images of the mood boards were cut and marked on the back with the colour that belongs to one of the four quadrants. In this case, brown is the Familiar and Robust quadrant, blue is the Familiar Refined quadrant, purple is the Novel Robust quadrant and yellow is the Novel Refined quadrant. Next, the reference products of all four quadrants were mixed up and stored in envelope 1. The same happened for shape inspiration in envelope 2, functional details in envelope 3 and materials and textures in envelope 4. The preparation process is shown in Figure 143. The four blank A3 sheets were taped together, with each sheet labeled from left to right with one of the four rating categories: ++, +, -, and --, as seen in Figure 143. All other materials noted in the section *Tools and equipment* were printed out or brought along for the study.

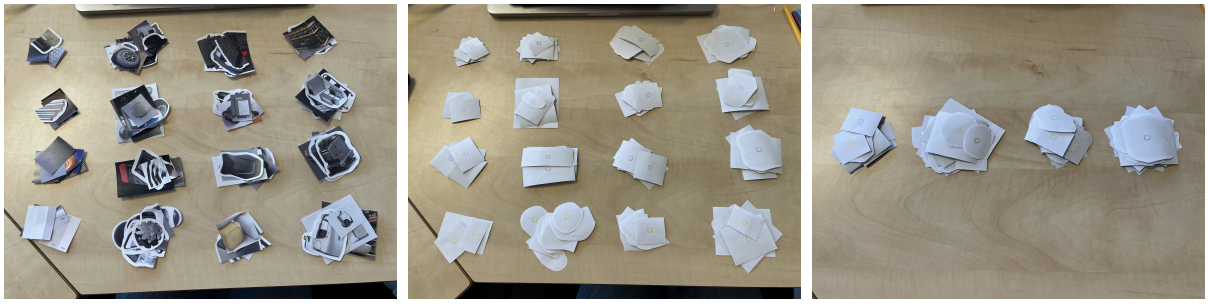

Figure 143. Preparing the user study by cutting out the images of the quadrants (left), marking them with coloured pencil on the back (middle), and mixing up the quadrants for each category (right)

During the study, the researcher first asked the participants for consent to participate in the study. The consent forms were securely stored after the study ended. When consent was given, the researcher laid out the materials in front of the painters (Figure 144).

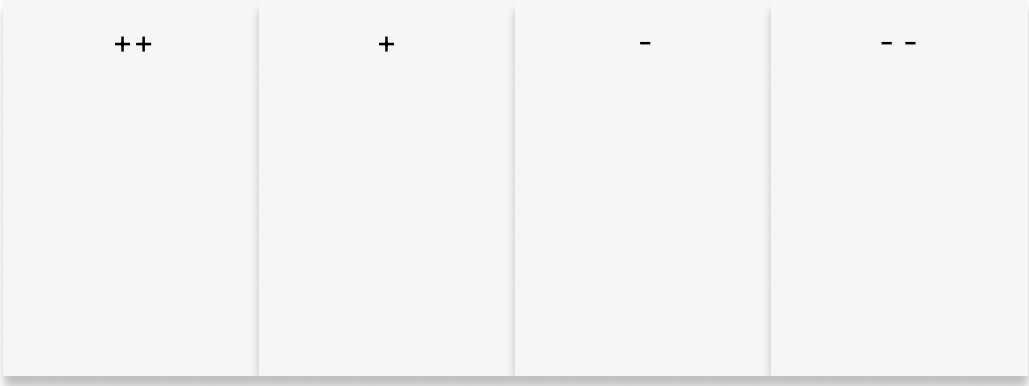

Figure 144. Laying out the materials

To prevent overwhelming the painters with all the images at once, the participants were first handed an envelope with all the images of the reference products. When they were done ranking those images, the researcher handed them the next envelope with shape inspiration images, followed by functional details and finally the images of the materials and textures. The painters were asked to rate each image in one of the four categories ++ (very good), + (good), - (bad) and - - (very bad) on what they think is most fitting for their ideal robot assistant (Figure 145).



Figure 145. Painters ranking the mood board images into one of the four categories

While the painters are ranking the images, prompting questions were asked by the researcher why they liked certain images and why they disliked certain images. The activity helped the painters to talk about their preferences. It was therefore important to listen what the painters have to say, then only to look at the results of the activity.

After all the images were ranked, the painters are given an explanation of the four quadrants, using the car example (Figure 136) to help them understand. Then, the painters were asked to turn around all the images. On the back of the images, a colour indicated to which quadrant the image belongs to. The activity ended with reflecting questions about the results of the activity and how the painters would describe the ideal aesthetic of the robot assistant.

Data processing and analysis

The audio of the interview was be recorded and written into a transcript, anonymising any personal information. The full transcript of the study can be found in Appendix W. The results of the activity were captured with a (phone) camera. The transcript of the interview and the result of the activity were analysed to identify which aesthetics painters find most appealing or suitable for their work environment. For analysing the quantitative data, the number of images in each categories and its corresponding quadrant was counted. After this, the positive percentage was calculated to see how positive the painters were about the quadrants. This was done for the general results, but also zooming in the results of reference products, shape inspiration, functional details and materials and textures.

For the qualitative data, For the qualitative results, the audio recording of the user study was transcribed and analysed in a step-by-step process (Burnard, 1991), where interview quotes are highlighted and clustered together to create insights. The findings from both the qualitative and quantitative results will help determining the final design of the robot cart, which is explained in Chapter 8.

Quantitative results

Figure 146 and Table 9 show the result of the activity. In total, 16 images were placed in the ++ category, of which 56% belonged to the Novel Refined quadrant (yellow). 40 images were placed in the + category, of which 40% of the images belonged to the Novel Robust quadrant (purple). The - category received the most images that belonged to the Familiar Robust quadrant (44%, brown), closely followed by the Familiar Refined quadrant (32%, blue).



Figure 146. Results of the activity

Overall, the painters felt the most positive towards the Novel Refined quadrant, with 78% of the images placed in the ++ or + category (Table 9). This was closely followed by the Novel Robust quadrant with 68% of the images ranked in the positive categories. The Familiar Refined was ranked third with 52% of the images ranked positive. The painters were least positive about the Familiar Robust quadrant, with 33% of the images in the positive categories.

Table 9. Comparing scores between quadrants

	++ (+2)	+ (+1)	- (-1)	- - (-2)	Total score	Positive percentage
Familiar-robust (brown)	3	5	15	1	-6	8/25 = 33%
Familiar-refined (blue)	3	10	11	1	3	13/25 = 52%
Novel-robust (purple)	1	16	5	3	7	17/25 = 68%
Novel-refined (yellow)	9	9	3	2	20	18/23 = 78%

When zooming in on the results of the reference products (Table 10 and Figure 147), the painters are most positive about the Novel Robust quadrant (100% positive percentage). Every image of the Novel Robust quadrant was ranked with a + or ++. The other quadrants have similar positive percentages.

Table 10. Results reference products

Reference products

	++ (+2)	+ (+1)	- (-1)	- - (-2)	Total score	Positive percentage
Familiar-robust (brown)	2	1	3	0	2	3/6 = 50%
Familiar-refined (blue)	1	2	3	0	1	3/6 = 50%
Novel-robust (purple)	1	6	0	0	8	7/7 = 100%
Novel-refined (yellow)	1	3	1	2	0	4/7 = 57%

Reference products



Figure 147. Results reference products

When looking at the results of the shape inspiration (Table 11 and Figure 148), the painters are most positive about the Novel Refined quadrant (100% positive percentage). Every image of the Novel Refined quadrant was ranked with a + or ++. The Familiar Refined quadrant also showed a high positive percentage, with six out of seven images ranked in the positive categories. Overall, no shape inspiration image was ranked in the - - category. Especially the images with small detailing where dirt and paint could gather, were rated in the - category.

Table 11. Results shape inspiration

Shape inspiration

	++ (+2)	+ (+1)	- (-1)	- - (-2)	Total score	Positive percentage
Familiar-robust (brown)	1	1	3	0	0	2/5 = 40%
Familiar-refined (blue)	1	5	1	0	6	6/7 = 86%
Novel-robust (purple)	0	3	4	0	-1	3/7 = 68%
Novel-refined (yellow)	3	2	0	0	8	5/5 = 100%

Shape inspiration



Figure 148. Results shape inspiration

The results of the functional details are shown in Table 12 and Figure 149. For the functional details, painters especially liked the images from the Novel Robust quadrant and the Novel Refined quadrant. Especially, the display images of Novel Refined were rated *very good*. When looking at the wheels, both Robust quadrants (brown and purple) were preferred over the wheels from the Refined quadrants (blue and yellow). For the the buttons the Novel quadrants (purple and yellow) were preferred over the Familiar quadrants (brown and blue). Almost all handle bars were rated in the + category, except for the Familiar Robust handle bar. The springs and the bumper were rated in the - category.

Table 12. Results functional details

Functional details	**++ (+2)**	**+ (+1)**	**- (-1)**	**- - (-2)**	**Total score**	**Positive percentage**
Familiar-robust (brown)	0	2	7	0	-5	2/7 = 29%
Familiar-refined (blue)	0	3	5	0	2	3/8 = 38%
Novel-robust (purple)	0	7	0	0	3	7/7 = 100%
Novel-refined (yellow)	3	2	1	0	7	6/7 = 86%

Functional details



Figure 149. Results functional details

Finally, the materials and textures were received less positively overall, with only 35% of the images rated in the positive categories, as shown in Figure 150 and Table 13. The matt black and the neutral tones were rated in the ++ category. Also the more neutral matt greys were included in the + category. Textured, shiny materials and the neon lights were rated more negatively overall.

Table 13. Results materials and textures

Materials & textures

	++ (+2)	+ (+1)	- (-1)	- - (-2)	Total score	Positive percentage
Familiar-robust (brown)	0	1	2	1	-3	1/4 = 25%
Familiar-refined (blue)	1	0	2	1	-2	1/4 = 25%
Novel-robust (purple)	0	2	1	3	-5	2/6 = 33%
Novel-refined (yellow)	2	0	1	0	3	2/3 = 66%

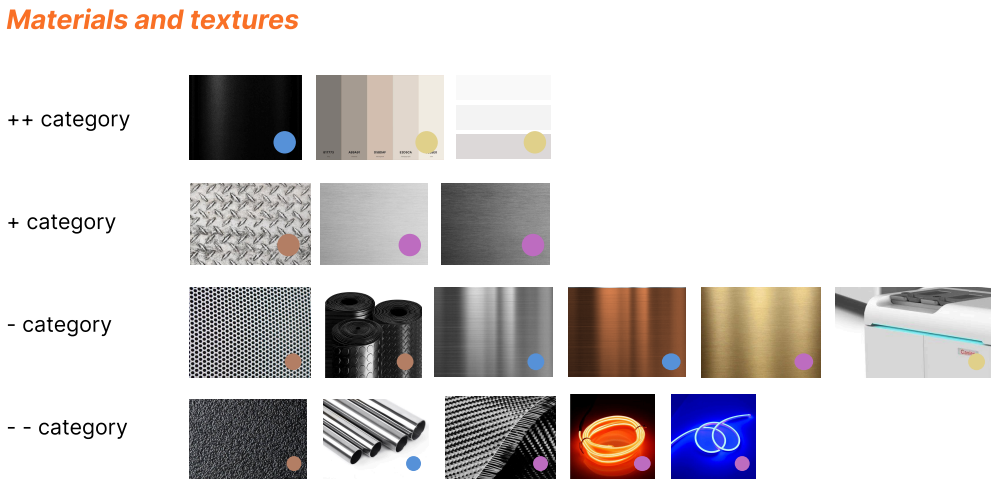

Figure 150. Results materials and textures

Qualitative results

The qualitative results are insights gathered from analysing the interview transcript (Appendix W). The insights are substantiated with quotes from the younger and older painter and the project manager. These insights reflect the painters' aesthetic preferences and practical needs for their ideal robot assistant.

General shape
Simple, smooth shapes were preferred. Painters warned against complex forms, grooves, and small details where paint and dust can gather.

'*You should avoid large corners and small shapes as much as possible.' – Younger painter.*
'You don't want a lot of ridges; that just collects dirt.' – Older painter

It was important for the painters that the robot was easy to clean. If the robot is waterproof they could clean it with a hose or pressure washer.

'If you're sanding, it'll get dirty in no time. It needs to be easy to rinse off. Waterproof. That screen should also be waterproof so you can quickly clean it by spraying it.' – Younger painter. 'Maybe even clean it with a pressure washer.' – Project Manager

While one painter suggested using a cover to protect the robot against dust and paint while working, the other painted said that this would get in the way during use. Instead, the robot itself should be built to withstand dust and paint.

'But if you're working with it and need the materials, a cover won't work. The robot itself needs to be able to handle it.' – Younger painter

Functional details
There was a clear preference for sturdy wheels that can handle rough terrain.

'You need sturdy wheels.' – Painter 2. 'The robustness is especially practical important for the manoeuvrability, so it can handle obstacles and can handle rough handling.' – Younger painter

For the buttons and user interface, simplicity was important.

'*A control panel like this. Nice and simple.' – Older painter*

Materials and textures
Regarding the colour of the robot, it is most important that the robot stands out in the workspace to increase visibility for the overall safety. The painters and the project leader suggested using high-contrast colours like red-white or yellow-black, or even adding signal lights.

'I'd want a colour that really stands out. Red-white, like a warning tape, so everyone sees the robot and doesn't bump into it.' – Project Leader. 'Yes, I agree. You need to see that there's a machine there.' – Older painter

Materials with non-slip textures were considered useful, especially for the base of the cart.

'That's an anti-slip pattern. That's useful for the bottom, so everything stands more firmly.' – Older painter

Painters said that the robot will inevitably become dirty, so the colour could either highlight the dirt for cleaning or hide it to appear less messy. One suggestion was to use a colour or pattern that already looks like splatters.

'In terms of colour, it's going to get dirty anyway. I wonder if it's better for the colour to be functional, so you can see where the dirt is, or should it be more aesthetic, so that paint splatters are less noticeable. Maybe do something with colour that already looks like splatters, so the robot doesn't appear so messy or dirty.' – Younger painter

Ideal robot assistant
After the activity and the theory behind the quadrants explained, the painters were asked to describe the aesthetics of their ideal robot assistant:

'We're somewhere in between [robust and refined]. We want the practical parts of both. This category (yellow) has a lot of components that are made of one piece. Fewer parts, fewer panels, fewer screws. That makes it easier to clean. And the robustness is especially practical for maneuverability, so it can handle obstacles and can handle rough handling.' – Younger painter

'We want the robust feel, but it should be well-finished and easy to clean.' – Older painter

'Robust and refined. I think it's practical if the robot has both. Finding a balance between the two.' - Younger painter

Conclusion

This study aimed to determine the aesthetic preferences of painters for a robot assistant in their workspace.

Do painters show a strong preference for a specific aesthetic quadrant, or do they appreciate elements from multiple quadrants?
Combining the quantitative and qualitative results, painters' aesthetic preferences are leaning most towards the Novel and Refined quadrant (yellow). This was in line with the qualitative insights, where the painters explained that the sleek finish of the robot would make the cleaning process easier. Small detailing and textures would quickly accumulate dust and paint, and would be more difficult to clean. This also resulted in requirements for the robot to be dust- and waterproof. The robot will get covered by paint and dirt eventually, so it would be useful if the robot and its components are waterproof so the robot can be cleaned with a water hose or power washer.

During the reflection at the end of the activity, the painters mentioned they seek a balance between refined and robust for their ideal robot companion. They both want a sleek robot that consists of one body and has little to no detailing like grooves, holes and other textures that accumulate dirt so that the robot is easy to clean. On the other hand, they want a robot that is robust, can handle the rough handling of the painters and can also overcome the different types of terrain and the obstacles the robot may come across. This value was also reflected in the co-creation session with other painters (Chapter 7.3).

This is also reflected back in the quantitative results of the study. When zooming in at the results of functional details, the painters preferred the Robust quadrants for the wheels, to be able to overcome the obstacles and different types of terrain. For the buttons, they instead preferred styles from the novel quadrants. These styles were more sleek and integrated with the surface of the robot, with less possibility for accumulating paint and dust.

What are important aesthetic factors that should be considered when designing the robot (e.g., color, texture, material, shape)?
When it comes to colour, visibility and safety were the top priorities. Painters suggested using high-contrast colour combinations like yellow and black or red and white to ensure the robot stands out on the worksite. They also proposed adding signal lights to further improve visibility and overall safety in the workspace.

As for shape, painters preferred a simple, unified form with smooth surfaces and minimal components. This makes the robot easier to clean.

For materials and textures, matte and smooth finishes were preferred. Shiny or heavily textured materials were seen as impractical and more likely to become dirty over time.

In conclusion, painters prefer a robot design that balances refinement and robustness. A sleek, smooth appearance helps with the ease of cleaning, while robust components ensure the robot can withstand the demands of the painters and the environment. The insights from this study provide clear direction for the final design of the robot assistant that is accepted by the painters. The final design of the robot is explained in Chapter 8.

Discussion and recommendations

Overall, the method provided a visual and straightforward way to facilitate discussions about the desired appearance of the robot. Since painters often find it difficult to articulate their aesthetic preferences in words, the images served as a useful tool to express their opinions more clearly. The approach acted as a conversation starter, and encouraged participants to elaborate on what they do and do not want to see in the robot's design.

'I found it to be a useful and insightful method.' – Younger painter
'I think you've worked it all out very well. You've clearly put a lot of thought into it.' – Older painter

To gain deeper insights, it was necessary to ask reflecting questions during and after the activity. The answers to these questions should be combined together with the output from the activity to be able to draw conclusions. For example, painters said that the robot should be bright in colours so it would be visible in the workspace, yet this preference was not strongly reflected in the selected images. It is also recommended to ask more questions to the painters during the study, to gain more information why they made certain decisions.

Another advantage of the study is that you can identify both preferred aesthetic elements, and also disliked or even hated aesthetic elements. For example, the method showed that the painters did not want any small detailing, like small gaps or grooves, as the robot would quickly become dirty and difficult to clean.

It is important to note that the method is quite subjective. Several factors influence the results, including the choice of axes, the terminology used, and the selection of images for the mood boards, all of which were determined by the researcher and could be interpreted differently by someone else. To address potential language barriers, the activity was also translated into Dutch, which may have affected how participants interpreted the axes and the descriptions of the quadrants. A recommendation is to run a pilot study with someone and see how the descriptions and axes are interpreted.

Reflecting on the preparations
The activity was conducted with two painters: one younger and one older. The older painter did have difficulty with the smaller images, so a suggestion is to use bigger images. The activity seemed a bit too overwhelming for him, and he took a less dominant role than the young painter.

'It's getting a bit too much for me. He [other painter] can handle it.' – Older painter during the third envelope functional details

The young painter mentioned that it was a good and visual activity, but that maybe some images looked too similar. Another recommendation is to be more selective of the images and make sure that the images are not too similar. Quality should be prioritised over quantity, because if too many images are used, participants lose their attention toward the end of the activity.

Reflecting on the execution of the user study
Presenting the images in the four envelopes one by one was helpful in preventing participants from feeling overwhelmed. It helped the participants to remain focused and it helped with clarity throughout the exercise.

The final round, which involved evaluating materials, appeared to be less effective than the previous rounds. Instead of ranking individual material images, an alternative approach could be to offer a limited selection of materials and ask participants to compose their ideal material combination for the robot.

7.6.4 Designing the aesthetics

To combine the insights from Chapter 7.6.3 into the robot's design, new sketches were made that try to combine the functional elements from the chosen functionalities and desired interaction together with the preferred aesthetic preferences of the robot. Figure 151 shows some of the exploration and process to the final aesthetics of the robot assistant. Figure 152 finds a balance with making the robot look both refined and robust, uses few textures and and seamless outside body for the refined look, and use big wheels and chamfered edges to make the robot look robust. It also uses high-contrasting colours to improve visibility. The complete exploration of the aesthetics can be found in Appendix X. The final design is presented in Chapter 8.

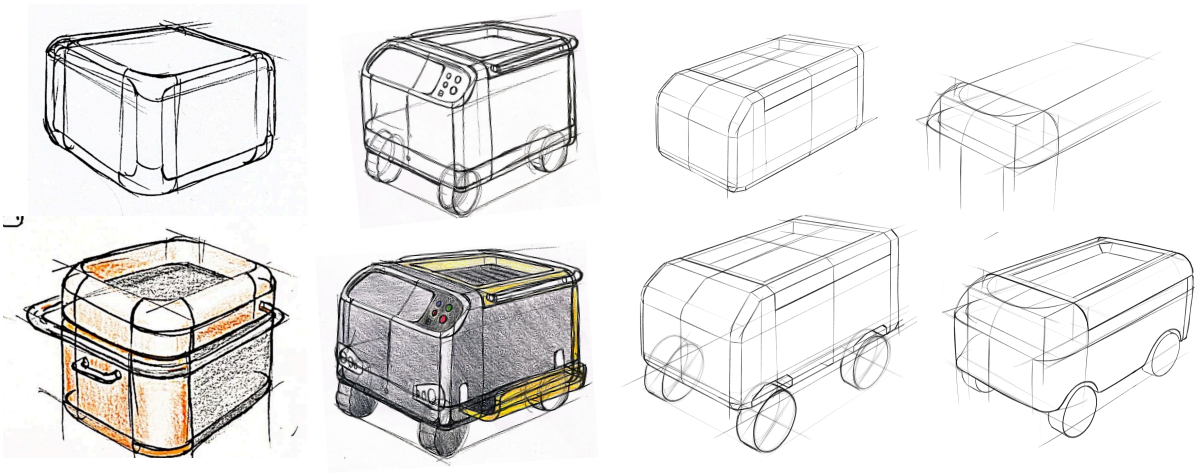

Figure 151. Exploration embodiment using aesthetic preferences of the painters

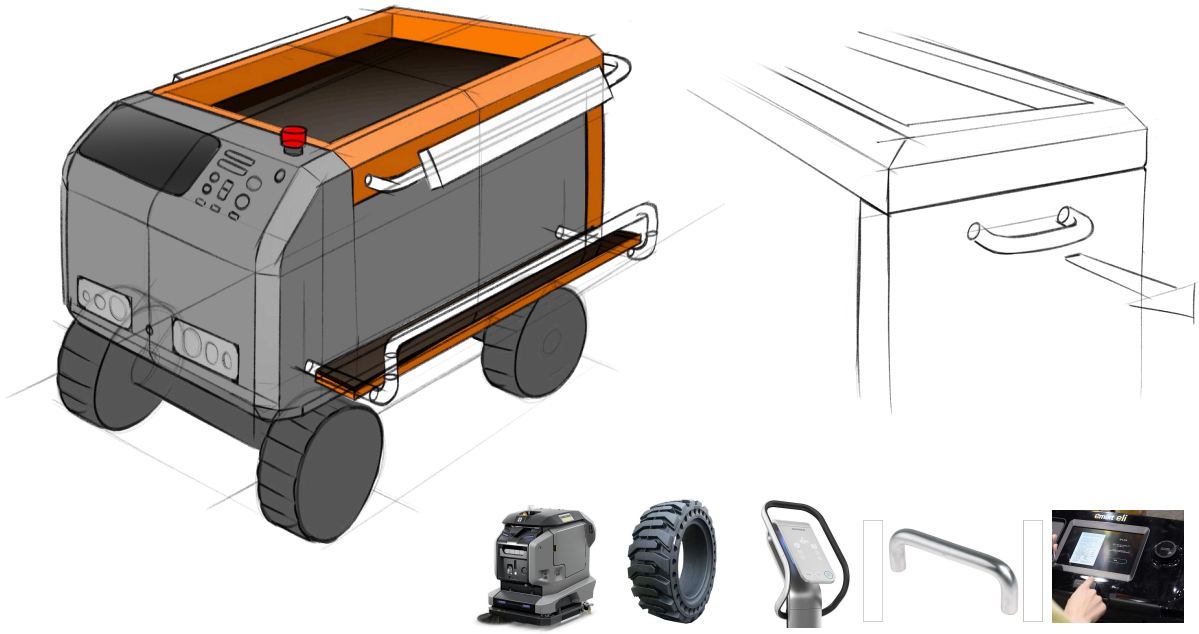

Figure 152. Integrating ++ and + rated elements from the aesthetics evaluation in the design, and finding a balance between a sleek but robust look and feel

Personal takeaways Concept detailing

After the concept evaluations with painters from different contexts, it was quite hard to decide on a final design direction. I started exploring again, and this led to new ideas and directions. This process taught me that sometimes, you have to make design decisions on your own, without always going back to the user. I realised I was stuck in the converging phase and needed to move forward by narrowing things down and making design choices.

When making the full-scale prototype, I improved and learned new skills, like working with SolidWorks, using a laser cutter for prototyping, coding, electronics and soldering.

Creating the storyboard helped me think about the full workday of a painter. It showed me where some parts of the design were still unclear or missing. This helped make the design more complete and realistic.

Making the mood boards helped me to make decisions about the aesthetics of the robot that aligns with the aesthetic preferences of the end-user.

From designing and executing the different user studies (the co-creation session, the aesthetics and interaction evaluation) I also learned a lot. For example, I learned how to create and adapt methodologies to fit my own research goals, I learned to lead the sessions where I as a researcher take on a non-dominant role where I stimulate the participants to reflect on the design. The methods I used were a visual, interactive and simple way to evaluate the design with end-users, and the gathered insights could be used to improve the design. The prototype that was used during the co-creation session was also helpful tool to let the participants imagine new functionalities.

08 FINAL DESIGN

Throughout the project, many interviews and evaluations were carried out to immerse in the context, and understand the challenges and needs of different stakeholders to design a robot assistant that fits both the users and their environment. Following a user-centered design approach, users and other stakeholders were actively involved in each phase of the process, and the outcome of the sessions helped improving the design and inspired new iterations. This chapter presents the outcomes of this project, summarising the robot assistant's final functionalities, interaction, and physical embodiment.

8.1 FINAL DESIGN



Figure 153. Final design



Figure 154. Final design - Storage drawer and inside housing integrating the actuators, battery charger and wires

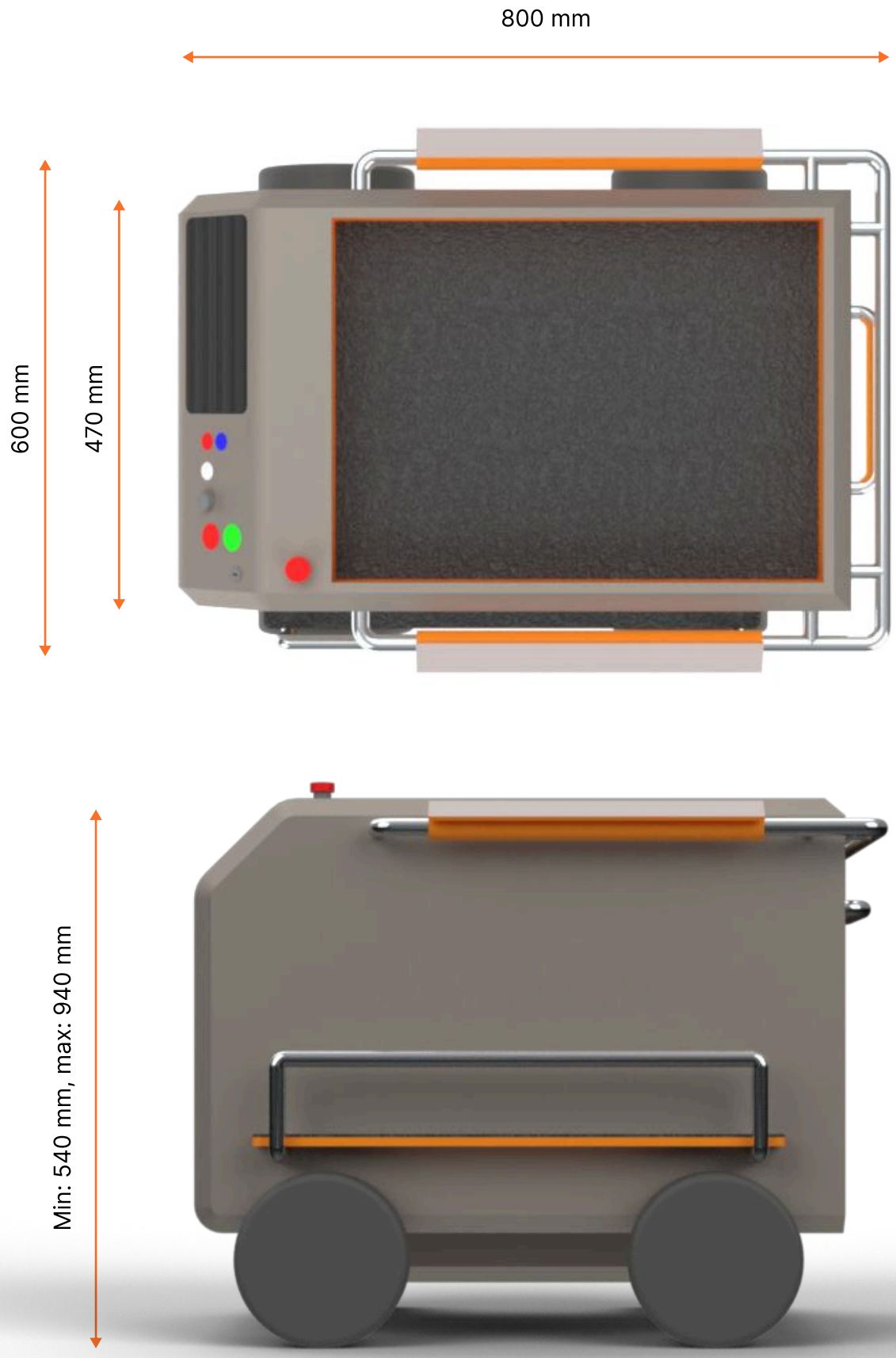

Figure 155. Measurements final design



Figure 156. Front view of final design with access door to electronics



Figure 157. Final design in comparison to human body

8.1.1 Embodiment

Look and feel

Sleek and easy to clean

The final iteration of the robot's embodiment was driven by the aesthetics evaluation (Chapter 7.6). From this study, the painters wanted the robot to both be refined and sleek without too many details or textures to avoid paint and dust getting stuck. This makes it easier for them to clean the robot at the end of the workday. In response, the robot's form was streamlined: it has minimal protruding elements, and the components are flush with one another to create a smooth, unified appearance.

The outer shell of the robot is made out of brushed stainless steel sheet metal, making it both look sleek but also robust and strong to withstand the rough conditions of the workspace. The outer shell is made of bent metal formed in one continuous piece, minimising seams to make the design more waterproof.

For the user interface, the buttons and the screen are neatly integrated in the robot (Figure 158). They do not stick out to avoid collecting dust and paint.

Like the outside, the inside was also designed without any small corners that attracts dust and makes it easier to clean. The actuators and battery charger are neatly integrated in a plastic housing in the storage compartment.

The front- and back lights were adapted into more elegant lights that were in line with the aesthetic preferences.

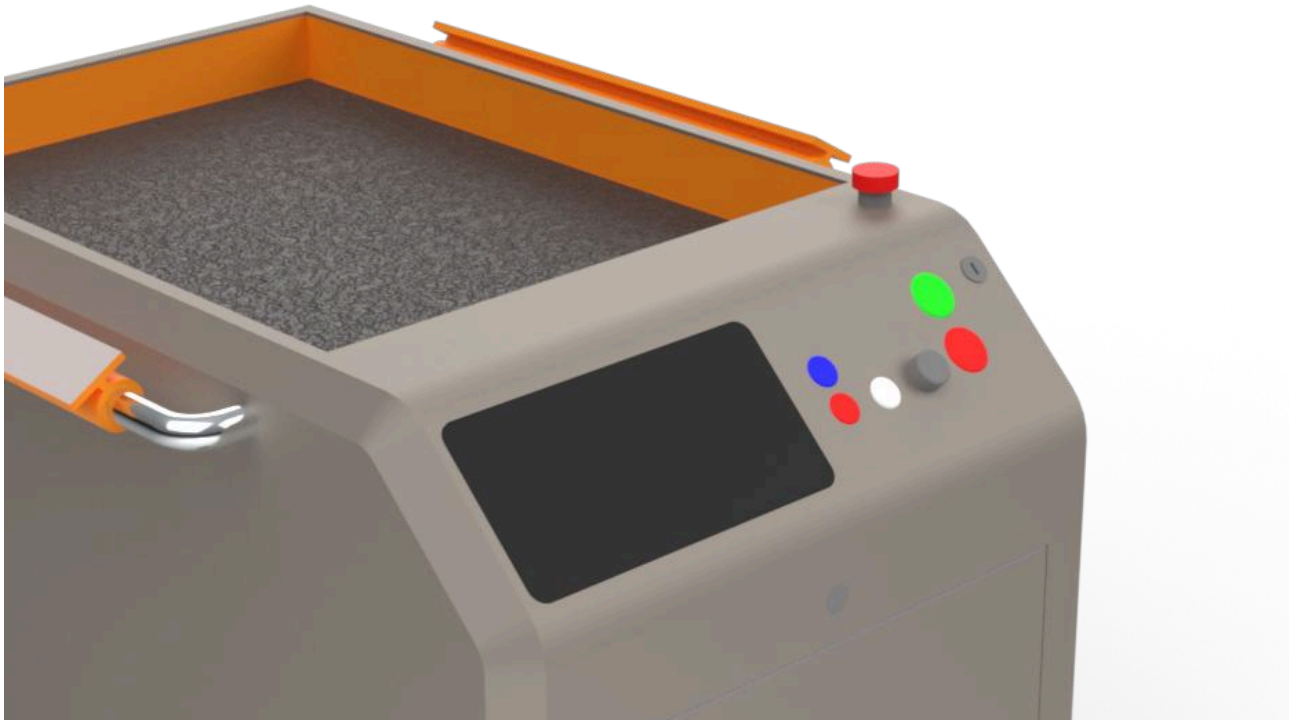

Figure 158. The buttons of the user interface are neatly integrated

Robust
While the painters preferred a sleek look, they also wanted the robot to look robust and capable of handling the different terrain and obstacles. Big robust wheels similar to the ones they liked during the aesthetics evaluation were placed on the outside of the body. It was not integrated in the body of the robot, as it would make it more difficult to clean the wheels. The sheet metal outside and its chamfered edges keeps the design sleek, but gives the robot a more robust look and feel.

Organisation of tools and materials
The aesthetics evaluation also showed their preferences for organisation with storage drawers. The robot has multiple ways of storing and organising tools, with a height-adjustable worktop to place the materials the painters are using for a task, a storage drawer for put in small tools, a storage drawer for larger tools and materials, and magnetic hooks that can be attached anywhere on robot to hang tools like paint brushes or rollers.

High-contrast colours
The painters also wanted the robot to stand out on the scaffolding. In earlier analyses, use-cues from other products showed that high-contrast colours help users identify which parts are meant for interaction. The final design features brightly coloured elements like the back door, worktop, wing, buttons (for the lifting mechanism, light, and emergency stop), and the charger cap. These choices improve visibility and safety, while also guiding users on how to interact with the robot. The rest of the robot is more neutral coloured, to help with the contrast.



Figure 159. The interactive parts of the robot are highlighted in orange

Materials and production

A cross section of the robot can be seen in Figure 160, showing the layers of the robot's materials.

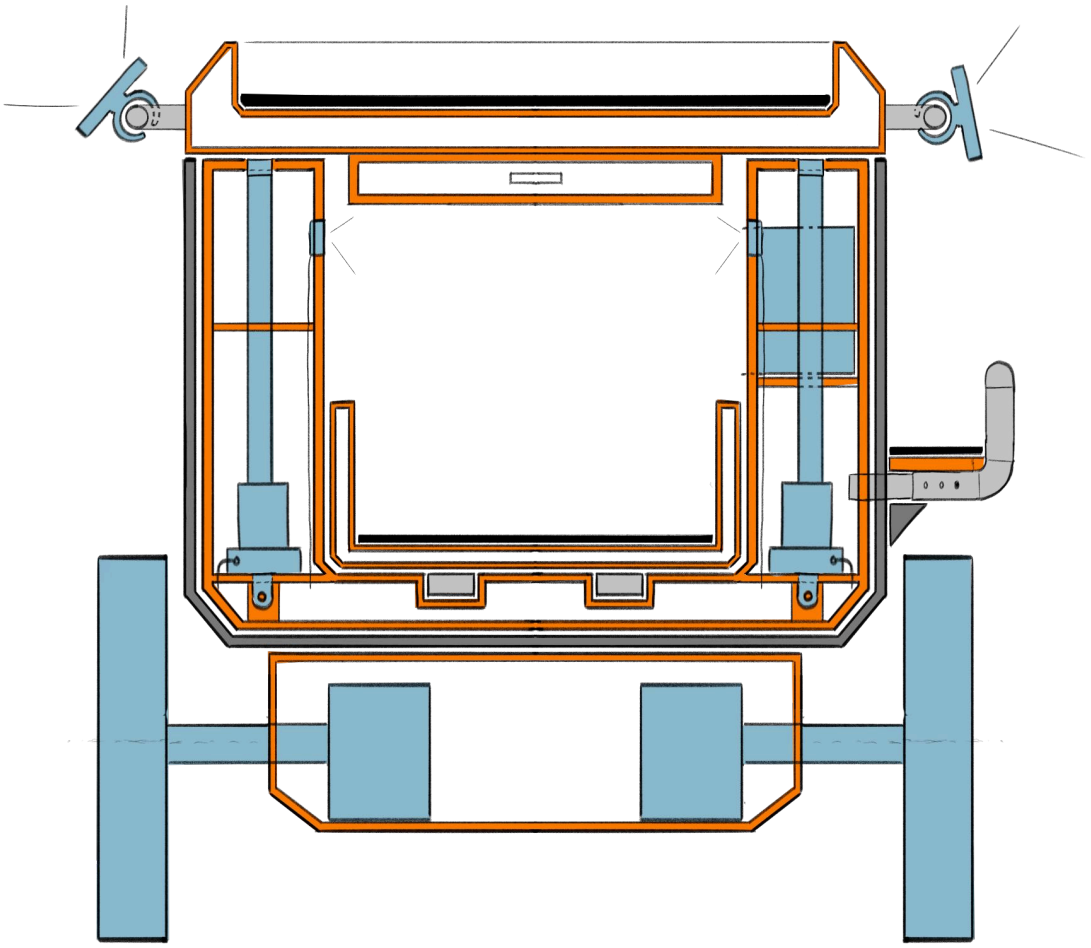

Figure 160. Cross section of the robot showing the metal outside (dark grey), plastic housing (orange), aluminium parts (light grey) and other components (blue)

Metal outside

For determining the materials and the production method, it is assumed that the robot is produced in low (0-100) to medium production volumes (100-10.000). The batch size affects the production methods, as some methods are advantageous for higher volumes. The following proposed production method is a suggestion when the robot would be produced in a lower volume.

The outside of the robot is made from brushed stainless steel sheet metal. The sheets are laser cut and bent into the right angles and shapes. The laser cutting is used for cutting slots and connection points from the metal. Bending combined with laser cutting is a cost-effective production method and suitable for low to medium production (Komaspec, n.d.).

Plastic inside housing

The plastic inside housing could be produced using additive manufacturing. Additive manufacturing is suitable for producing low volumes and allows for production with little waste. Another great advantage to additive manufacturing is that it is cheap to iterate and change the design of the part. For injection moulding, it is expensive to make changes as you would need a new mould. The downside of additive manufacturing is the need for post-production. If the robot would be produced in higher production volumes and the part's design does not need to change anymore, injection moulding could be a faster and cheaper alternative. The advantages of injection moulding compared to additive manufacturing is that the production time is much smaller and there is no or little need for post-production. However, for the smaller batches, the set-up costs of the mould would be too much in comparison with additive manufacturing. (Padasak, 2023) (SyBridge Technologies, 2023)

Polypropylene (PP) was selected as the best fitting material. The plastic is relatively cheap, lightweight, medium impact strength, good electrical insulation (good for the electronics) and low water absorption (good for cleaning) (IMS, 2022). As can be seen from the cross section, the plastic housing has a double layer to improve the stiffness and overall strength of the housing. The spacing is also used to integrate the linear actuators and the battery compartment. Making the inside housing seem thicker also makes the sturdiness more convincing to the users.

Wing and handle bar

The tubes of the wing, the handle bar and adjustable light are hollow aluminium tubes which are bent in 90 degree angles. The aluminium tube runs in one piece from side to side through the back of the robot. This was inspired by the functional details that the painters liked during the aesthetic evaluation. For the final design, the lights were only added to the sides, and the aluminium tube in the back serves as a handle bar to manually push or pull the robot in the right position. The hollowness of the tubes is used to create a telescopic mechanism to adjust the width of the wing (Figure 161). For the adjustable lights, the cables run through the tubes to a flexible cable organiser. This flexible cable organiser is fully integrated in the plastic housing when the worktop is retraced, and only visible when the worktop is extended.

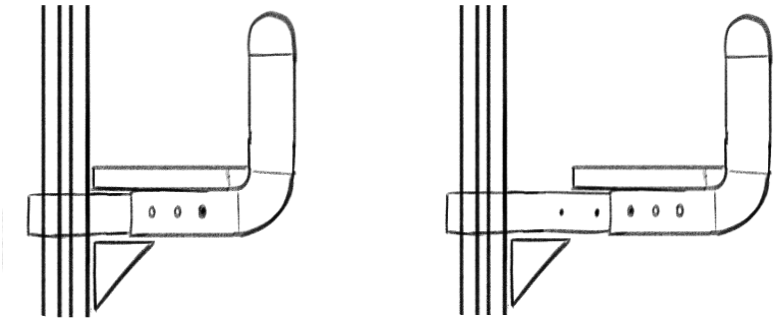

Figure 161. Telescopic mechanism of the wing, min width (left) and max width (right)

Anti-slip
To avoid the tools and materials from sliding around, rubber anti-slip matts are placed on top of the worktop, wing, and storage drawer (Figure 162).

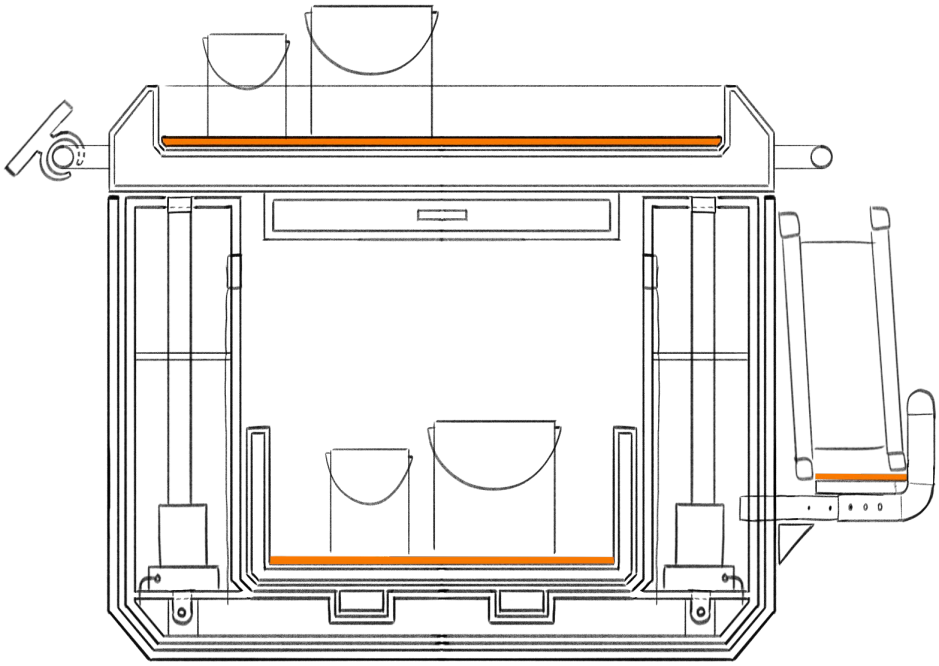

Figure 162. Anti slip matts (indicated in orange) to prevent tools and materials from sliding

Assembly
Figure 163 shows the top view of the back of the robot. Here you can see how the backdoor slots into the rest of the robot. Magnets on either side keep the back door in place.

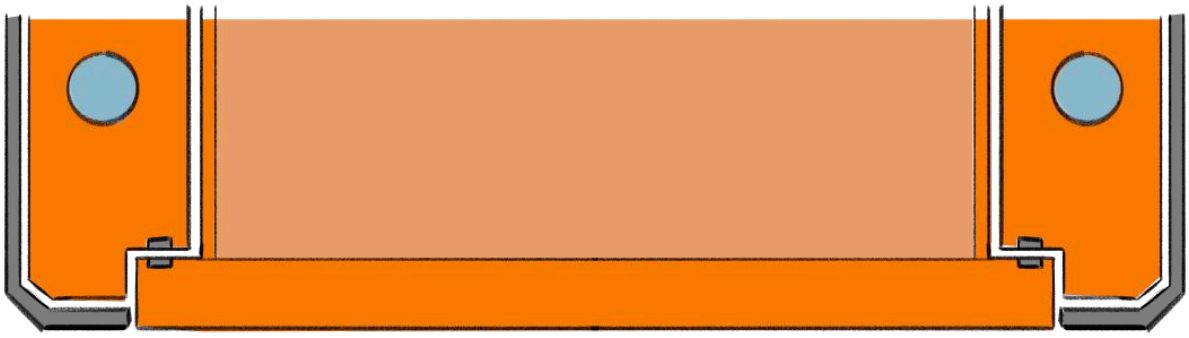

Figure 163. Top view showing the connection between the back door and the storage compartment with magnets. The orange indicates the plastic housing, the dark grey the metal outside and the magnets, and blue the linear actuators.

Figure 164 shows that the wires from the linear actuators, the battery charger, the construction lights in the flexible cable organiser and wires from other electronics can all be integrated in the plastic housing.

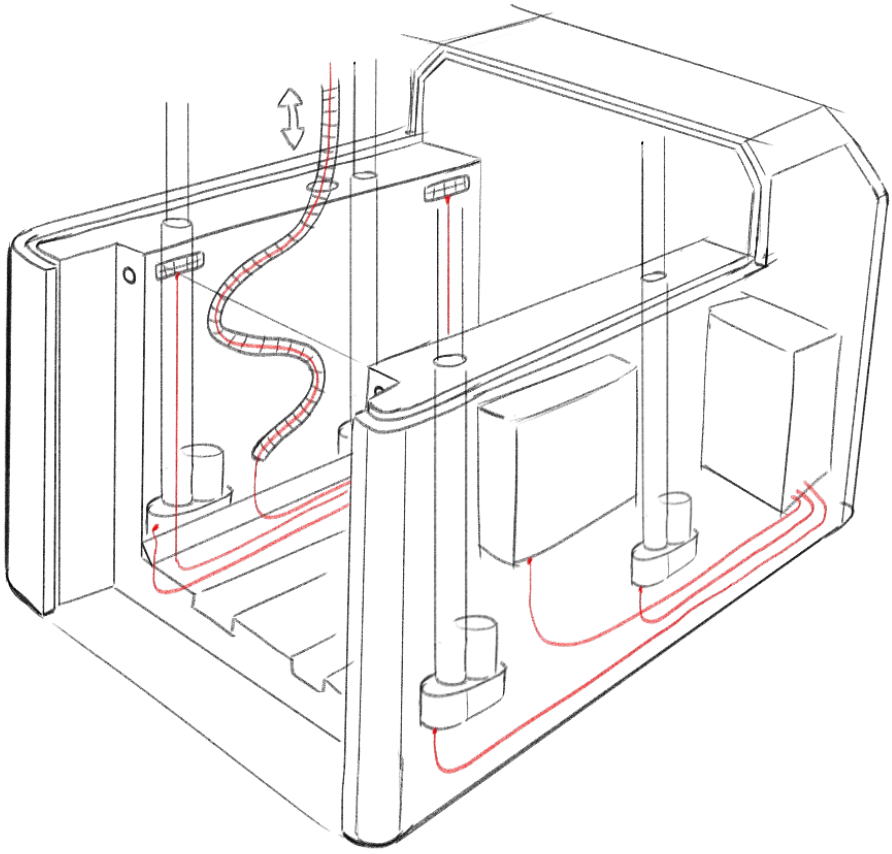

Figure 164. The wires are also integrated in the plastic housing

The front of the robot contains most electronics and can be accessed through a door (Figure 165).

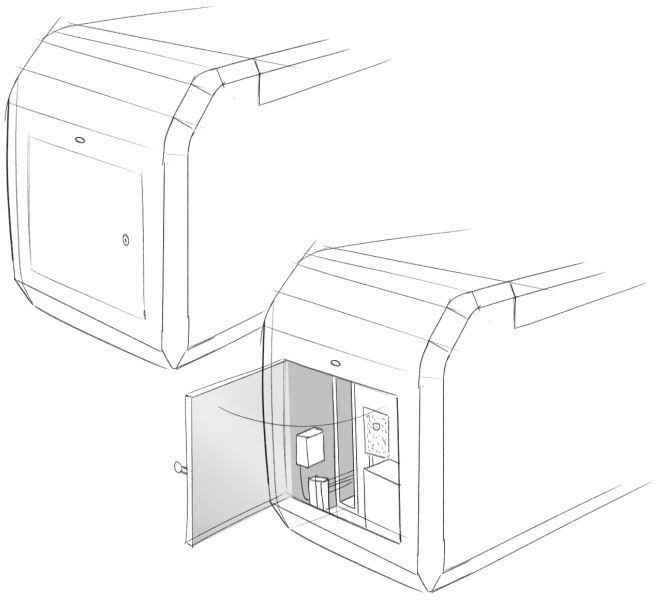

Figure 165. Access to electronics

Connection metal outside with plastic housing

The plastic housing is connected with the metal outside with screws. As PP has a higher linear thermal expansion coefficient than metal, so the plastic can expand more (JC Fasteners, 2020). To solve this, the parts should have slotted screw holes to allow some movement (as shown in Figure 166), and the fasteners should not be too tight. The housing can be removed entirely from the storage compartment. This could be useful for repairing or replacing malfunctioning components.

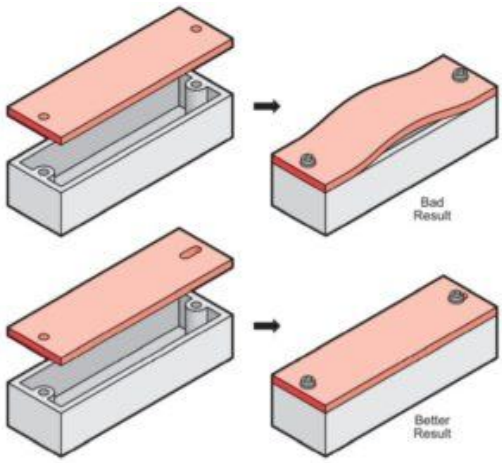

Figure 166. Connection of plastic (red) and metal part (grey). Add slotted screw holes to deal with the high thermal expansion of plastic. Photo: JC Fasteners

Other connections with the components are visualised in Figure 167.

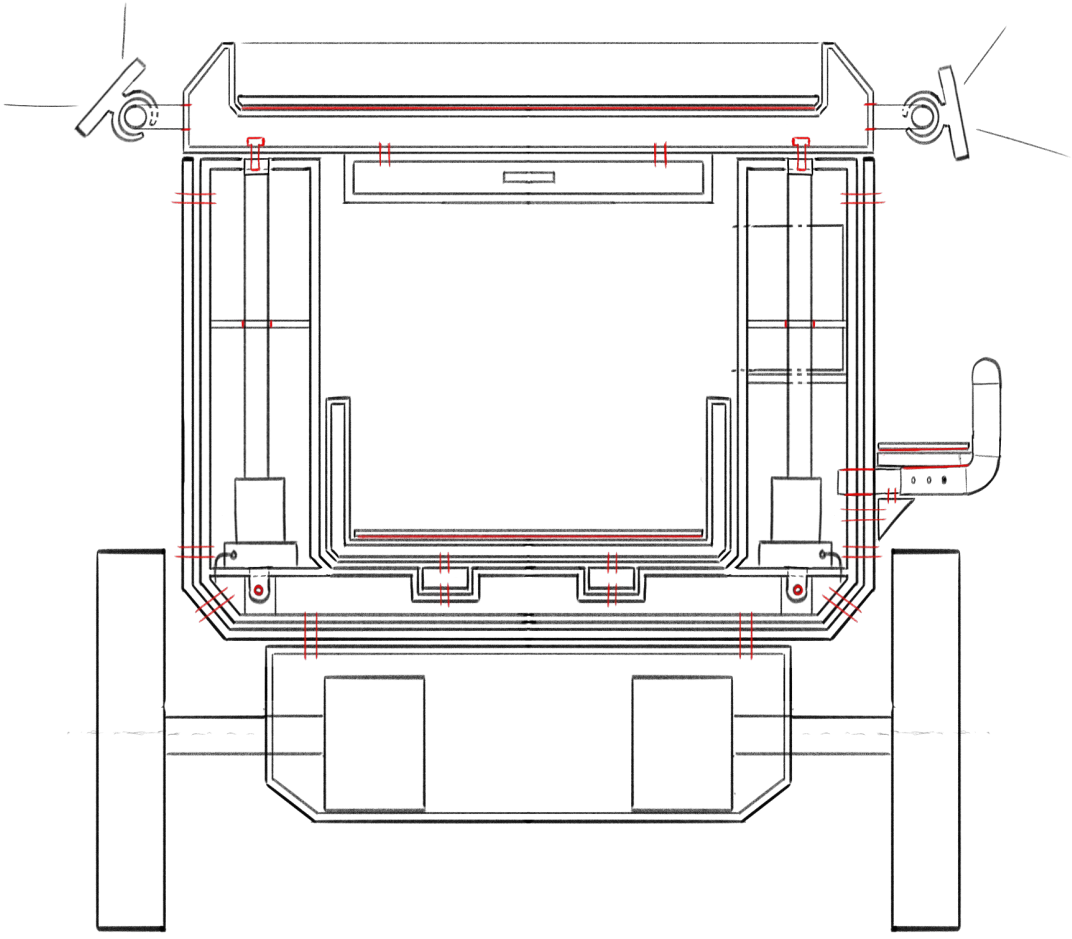

Figure 167. The wires are also integrated in the plastic housing

8.1.2 Functionalities

After the final aesthetic and interaction evaluation and thinking about the final design and materials of the robot, the following new functionalities were added to the design:

Water drain
It would be useful and time efficient if the painters could clean the robot with a hose or power washer. During cleaning or the robot stands outside in the heavy rain, the worktop and storage compartment collect water. To solve this, a drain pipe was added to both areas to channel the water away. To prevent the drain from clogging with paint or dust, there's a cap that painters can remove when they want to drain the water. A grid drain is also included to stop larger debris from blocking the pipe.

On site charging
On one side of the robot, a power supply retractable cable can be accessed (Figure 168). With this cable, the robot can be charged at the storage container or plugged in at the workspace. To prevent dust and paint from getting in, a screw cap protects the charge cable.

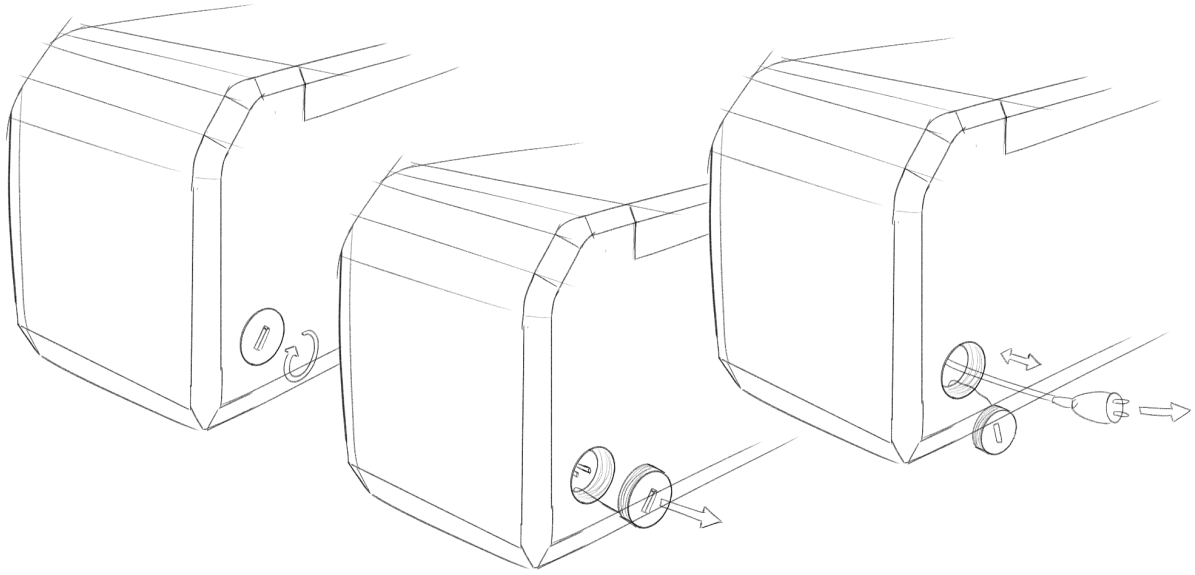

Figure 168. Easy and on-site charging with a retractable power plug

Weather advisor
In addition to showing the rain forecast, temperature and humidity level, the robot can also save weather data for administrative purposes, and can give painters weather advice to improve planning the tasks for the day. It also includes a temperature and humidity sensor to more accurately give the weather data at their location.

Hang tools with magnetic hooks
As the outside of the robot is made out of metal, painters can use magnetic hooks to hang brushes, rollers, screwdrivers and other small tools (Figure 169).

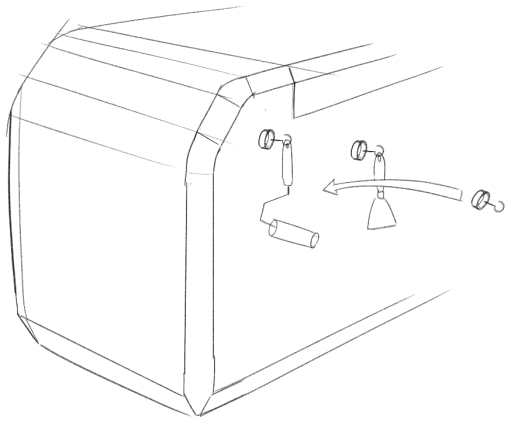

Figure 169. Magnetic hooks

Removed functionality: autonomous retrieval mode
The final evaluations, described in Chapter 7.5, also revealed concerns about the autonomous retrieval of materials from the storage container. Painters did not trust the robot to drive unattended and were skeptical that it would actually save time. They were also worried that the robot might cause problems if it damaged personal property. For these reasons, the autonomous retrieval mode was removed.

Final functionalities
In summary, the final design of the robot assistant has the following functionalities:

At the storage container
- Carries tools and materials for the whole day
- You can easily access the storage compartment with the drawer
- Lights up the storage compartment with an automatic light
- Carries and keep small tools organised in the small tool drawer
- Carries bigger materials (like a ladder, or large pieces of wood) in the adjustable side wing
- Hang tools with the magnetic hooks

Between storage container and workspace

- You can secure items to the robot during transportation
- Avoids tools falling off with the railing
- Avoids tools from sliding with anti-slip matts
- Follows you to the workspace or back to the storage container (follow-mode)
- Avoids obstacles (e.g. humans, walls)
- You can take over manual control over the robot's movement by switching to the manual-mode and use the physical joystick
- You can shut off the robot with an emergency stop button
- Overcomes small obstacles (e.g. curbs, door posts)
- Can drive over multiple terrain types (e.g. grass, uneven streets, dirt)

At the workspace

- Listens to voice-commands or use the intuitive user display for commanding the robot (multiple options to take into account different user preferences)
- Gives confirmation of the given commands
- Gives daily weather advice to plan ahead with painting tasks
- Measures and displays humidity level and gives alerts when it gets too high to do painting work
- Measures and displays temperature and gives alerts when it gets too low or high to do painting work
- Displays local rain forecast and gives alerts about incoming rain
- Can support on (wide) scaffolding, the gallery, different terrain types and inside
- Can stay at a preferred distance to keep your materials close at all times (work-mode)
- Can stay in a set position (park-mode)
- Lifts tools and materials at the desired height (set height between 54 and 94 cm)
- Lights up workspace with adjustable construction light on both sides
- Locks the robot during breaks to keep your tools and materials safe by taking the key out
- Can help with translating between colleagues or tenants (translate-mode)

Charging and maintenance

- Integrated charger for easy and on-site charging
- Displays battery level of the robot
- Charges batteries of electric devices (like sanding machine) inside the storage compartment and displays their battery level
- Drains rain- or cleaning water from worktop and storage container with drain pipe
- Access to main components for maintenance

Components

The robot consists of the following components:

General shape

1. Metal housing
2. Plastic housing

General components

3. Bumper
    - Instant stop if it hits something
4. 4x wheels
5. Depth camera
6. Lidar sensor 360 degrees
7. Ultrasonic sensors
8. Battery
9. Power converter
10. Power supply retractable cable
11. Back-drivable electronic motors
    - To be able to push the robot around when it is out of power
12. Front lights
13. Back lights
14. Microcontroller
15. Wireless Wi-Fi module
16. Microphone module
17. Voice recognition module
18. Speaker

Functionalities

19. 4x linear actuators
20. 2x motor drivers for the linear actuators
21. Angle-adjustable construction lights
22. Battery charger
23. Clip for trash bag
24. Magnetic hooks

User interface

25. Touchscreen monitor (7-inch)
26. Temperature sensor
27. Humidity sensor
28. Battery indicators
29. Up- and down button lifting mechanism
30. On- off buttons construction lights
31. On- off button robot
32. Emergency button
33. Key switch



Figure 170. Components

Technology

From interviews, it was clear that the cost expectations were quite low (between €2.500-3.500). The project manager's expectations were shaped by current solutions, such as exoskeletons. To keep the cost price low, means to keep the technology simple and not too complicated.

The painter's expectations on the robot's technology were gathered through the co-creation session described in Chapter 7.3. During the co-creation session, the researchers presented the idea that the robot could collaborate autonomously with the painters. However, the prototype was actually controlled by the assistant researcher. The session revealed the painters' expectations regarding the level of autonomy and intelligence they desired from the robot. Painters want to maintain significant control over the robot, so they prefer to control its behaviour by selecting modes (e.g., follow-mode, work-mode). These modes can be pre-programmed and personalised by the painters via voice commands or a user interface. The ability to save personal settings, including language preferences, was also appreciated by the painters.

The robot also needs to be able to follow the painter to the workspace and back to the storage container. It should be aware of its environment, avoiding collisions and potential damage to personal property, or even the risk of injury to workers. The robot achieves this with LiDAR (Light Detection and Ranging) sensors, which allow it to map its surroundings and detect obstacles in real-time. This enables autonomous driving and tracking painters to follow them around the worksite. Additionally, the robot is equipped with ultrasonic sensors for closer-range obstacle detection. These technologies are widely used in robotics for cost-effective obstacle avoidance.

Painters can control the robot through a microphone to give voice commands, which are processed by the robot's voice recognition module. The robot also includes a speaker, giving confirmation of the commands, ensuring the painter knows that their input has been received. Painters prefer to operate the robot’s lifting mechanism and lights with simple buttons, so there is no need for complex AI technologies.

The robot needs software that can interpret the gathered data to be able to interact with the painter and the environment. As for automation, the research results show that painters want the robot to track them and drive autonomously, while still having the option to manually override it. This is level 4 (out of 5) automation, called high driving automation.

The used technologies of the robot are already applied in many robots across various contexts. The robot's preferred technology could be compared to serving or delivery robots used in restaurants and warehouses. The price of simple serving robots range between €5.000-15.000. These robots also contain a user interface for controlling the location of the robot, can calculate their ideal route to their destination and can stop and avoid obstacles.

The Coco Delivery Robots are priced at $5.000 (Wenming Machinery, n.d.). T8 Delivery Robot is a more advanced delivery robot, with autonomous charging and sensors to detect trays, and is priced around €10.000 (VeDoSign, n.d.).

Cost-price estimation

To give a rough estimation of the total cost, the cost price of the components, technologies and assembly were considered.

The cost price estimation of the robot is shown in Table 14.

Table 14. Cost-price estimation of the robot

Item	Cost (€)
General shape	*300*
General components	*900*
Functionalities	*484*
User interface	*107*
Hardware subtotal	***1791***
Assembly	*160*
Software (40% of cost price)	*1300*
Total cost price	***3251***
Sell price (with 20% profit margin & 21% tax)	***4721***

Hardware

The cost of the general shape was estimated based on the materials and production methods that were considered suitable options for producing the robot in low volumes. From the SolidWorks model, the volume of the plastic parts were derived and the total weight was estimated to be around 7 kilograms. The total production costs (€210) for 3D printing were estimated using an online tool (Prusa Research, 2020), which includes labour costs like print preparation and post-processing.

The robot's exterior comprises sheet metal components. The cost of sheet metal fabrication, including cutting and bending, varies based on complexity and volume. On average, the cost is estimated at €1.50 per kilogram (Artizono, 2024). From the SolidWorks model, the surface area of the metal was measured to calculate the weight. The metal parts weigh around 40 kilograms, so the cost would be around €60. Another €30 was accounted for the other materials, like the aluminium tubes and rubber matts.

Appendix Y gives an overview of all the individual components and their prices, assuming the parts would be bought on mainstream sites, like Amazon, AliExpress and Tinytronics. The prices of the components still include the tax and are bought in single batches, not in bulk. When buying the components for a higher volume, the components will also be cheaper. The tax can also be deducted from the component prices (21%).

Software
According to Dr. Henrik I. Christensen, a researcher on robotics and artificial intelligence, the software costs are about 40-60% of the total cost price (Christensen, n.d.). As the robot's intelligence does not need to be high, the 40% estimate was used to estimate the software costs.

Assembly
It was estimated that the total assembly time of the robot would be eight hours. Using an hourly rate of €16, which is the average rate of factory workers in the Netherlands (ERI, 2025), the total assembly costs are estimated to be €128.

Conclusion
This makes the total estimated production costs of the robot €3251. If the robot would be sold with a 20% profit margin, and then adding the tax (21%) to this, the sell price would be around €4721 for consumers.

The calculated cost price of the robotic assistant falls within the general expectations of the investors. When compared to existing robots on the market, the price is relatively low (Wenming Machinery, n.d.) (VeDoSign, n.d.). Although the project manager initially expected a lower cost price (€2500–3500), this estimate was based on exoskeletons, which are intended for individual use and would require separate units for each painter. In contrast, the robotic assistant is designed to collaborate with two painters simultaneously.

Other costs that could emerge for the consumer after purchasing the robot are the installation and set-up costs, maintenance costs, and a subscription fee to keep the software up to date. Also the training costs should be kept in mind, as the painters would need to get introduced to the robot and get used to collaborating with it before using it in the real-world. The set-up costs can range between $2000-5000, maintenance costs are in general 10 or 20% of the purchase price per year (~ €470-944), and software subscriptions can cost between $500-1.000 dollars a year (Qviro, 2024).

For entrepreneurs, smaller and mid-size painting companies, it is recommended to first rent the robot, for example how it is currently done with scaffolding and cherry pickers, to see how often the robot can be used in their context. If the robot saves significant time and effort and it can prove its usefulness, the companies can buy the robot. For larger companies, first a few robots can be purchased and tested in different teams or projects. If the robots show their value, more can be purchased to expand their use.

8.1.2 Interaction

After the final interaction evaluation the following things were changed for the interaction between the robot and the painter:

Improved user interface
Painters highlighted during the interaction evaluation that the interface should be easy and intuitive. The older painter suggested using just three buttons to control the robot. The feedback was taken into account when designing the final design of the user interface. First, the overview screen was simplified and less relevant data was removed. The overview screen now shows the humidity level and temperature, the mode that the robot is in, and the robot's battery level. The improved overview screen is visualised in Figure 171. The painters can click on each button to get more detailed weather information, change the mode of the robot or view the battery level of the robot and from the battery that is charged in the battery charger.

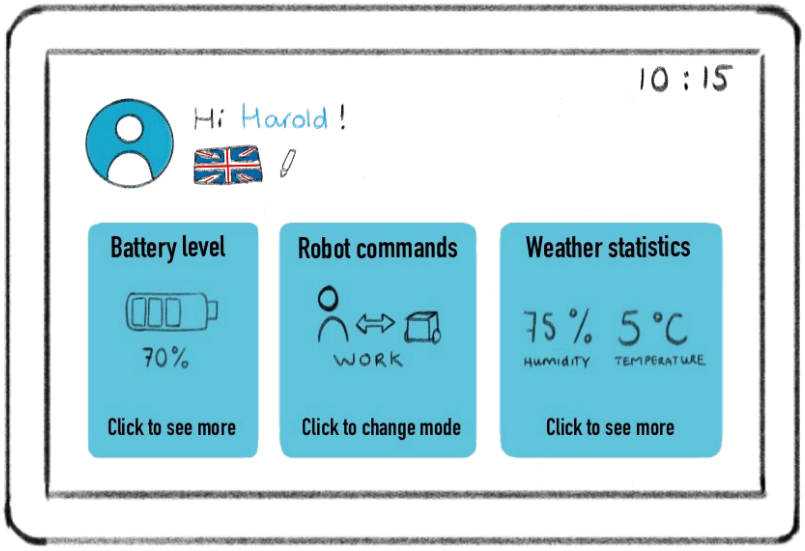

Figure 171. Improved overview screen

User account and language settings
Painters can save their personal preferences with their user account. In the account option, the painter can create a new user (Figure 172). If the robot is used by multiple painters between days, the painter can easily switch between accounts. In the account, the user also sets their language so the robot talks in that language, and can include their name so the robot can address the painter using their real name, just like a colleague would call them by their name.

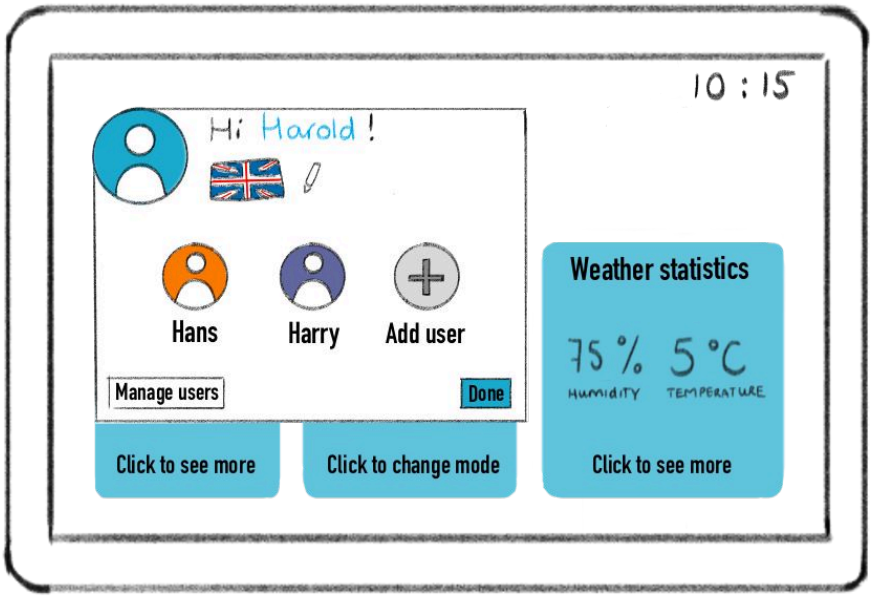

Figure 172. Switching between user accounts

Confirmation of commands

The robot gives confirmation of the commands that are given by the painter. If the painter uses voice-commands to set the robot in a different mode, the robot gives a verbal confirmation, while if the painter uses the screen to set the robot in a different mode, the confirmation is seen on the screen (as shown in Figure 173).

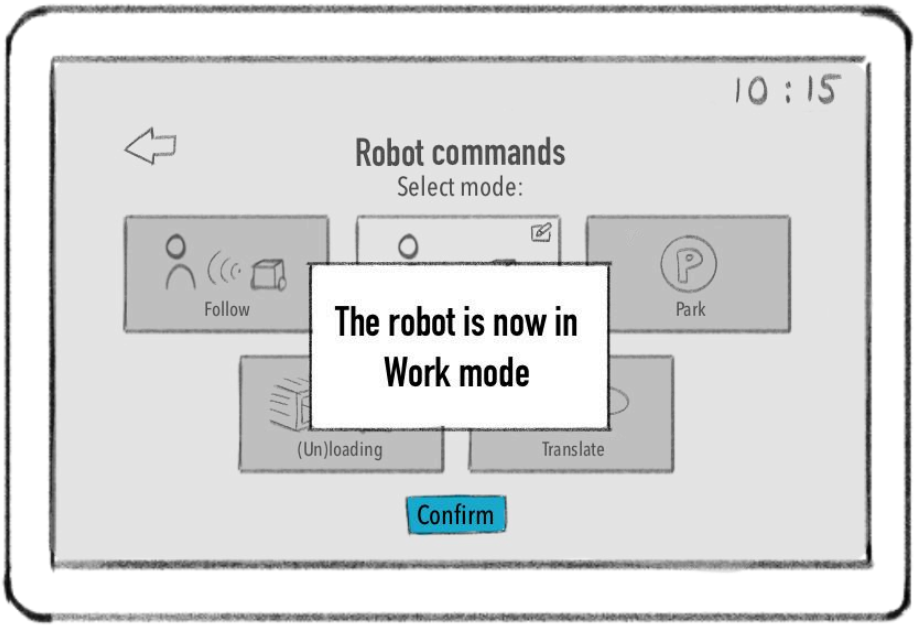

Figure 173. Confirmation of command on screen

Retrieve from storage-mode removed
For selecting the mode for controlling the robot's behaviour, the retrieve from storage-mode was removed and the design was simplified (Figure 174). It still includes the option to personalise the user settings for each mode like before.

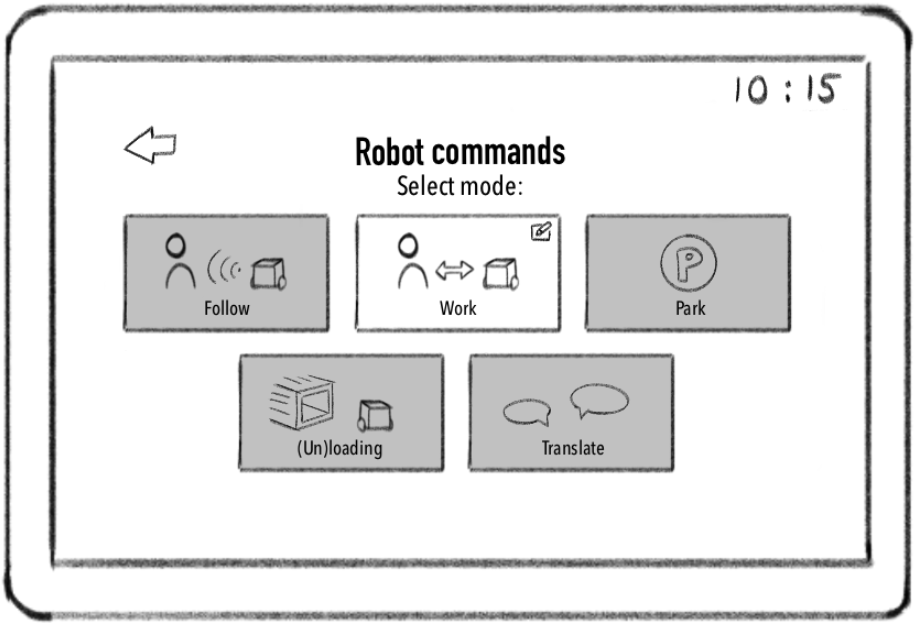

Figure 174. Robot command screen

View and download weather data
As for the weather information, the workers can see the rain forecast, get weather advice for the day, and view or download weather data from previous workdays. It still includes the option to turn on and off weather notifications.

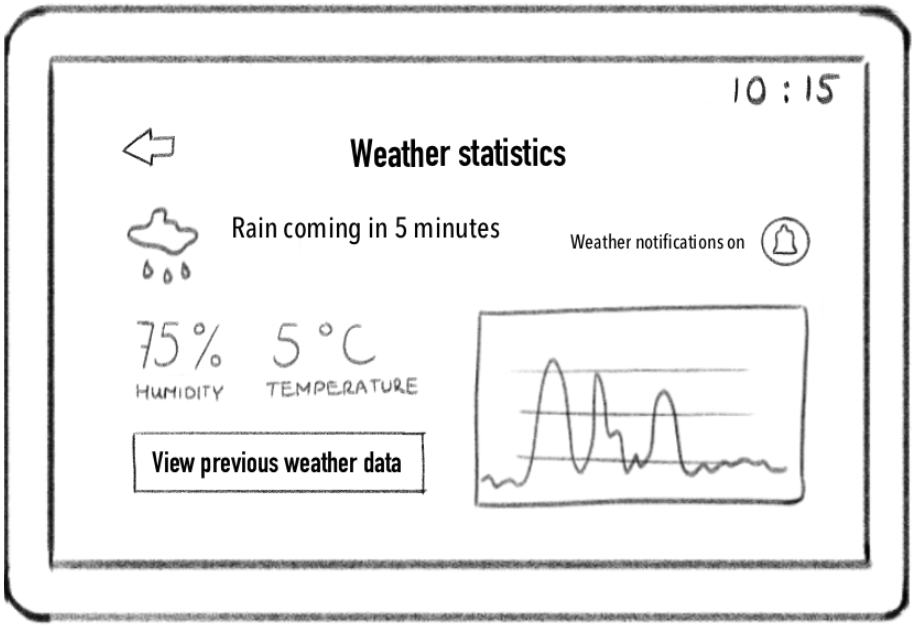

Figure 175. Detailed information - Weather

09 DISCUSSION

Throughout this project, I followed a user-centered design approach by involving painters directly in the development process. From the beginning, I focused on understanding their daily routines, needs, and challenges through interviews and context visits. Instead of designing for them, I wanted to design with them, using tools like card games, prototypes, co-creation sessions and storyboards to explore ideas together. While this approach came with some limitations and practical challenges, it helped me shape the robot design in a way that stayed closely connected to the users' needs and expectations.

9.1 REFLECTION ON USER-CENTERED DESIGN APPROACH

9.1.1 Contextual analysis

I began by immersing myself in the users and the challenges they face in their work, through interviews and site visits. It quickly became clear that the painters were not comfortable with the idea of a robot taking over parts of their painting work. Instead, they were more open to a supportive assistant. A robot that could move around with everything they need throughout the day and help reduce the physical strain.

Throughout the process, one of the main challenges was helping the painters imagine how a robot could support them within their specific work context. As a designer, I explored different ways the robot could add value with various functionalities, without immediately limiting myself to what's currently feasible in robotics. With those functionalities, I developed the Robot Functionality Cards. This playful card method helped identify which roles the robot could potentially take on, and which roles it shouldn't. The cards also encouraged the workers to reflect on what a robot could mean for them personally.

One limitation of this method was that the functionalities were selected and visualised by the designer. While this made it easier for the painters to respond to the ideas presented, it left little room for their own imagination. I did include blank cards for painters to suggest their own functionalities, but because of the large number of pre-filled cards, the painters did not really use the blank cards. That's why it's important to carefully consider which functionalities to include when designing such tools, and to avoid overwhelming participants with too many options, and to leave room for their own imagination.

9.1.2 Ideation and concepts

Insights from the interviews in both the industrial and residential painting contexts, together with ideation, rapid prototyping, and creative facilitation, led to many new ideas for what the robot could do in the painting context. Eventually, I grouped the most promising ideas into a “concept family.” Instead of evaluating the functionalities individually, I combined them into concepts. Giving the robot a form with multiple features helped the painters imagine it more clearly, and allowed them to reflect on what would and wouldn’t work for their context. One limitation of the concept evaluation in the residential context was that only one painter and one project manager participated, which led to less clear preferences. In contrast, the industrial context included six participants, which gave a more well-rounded view.

9.1.3 Concept detailing

To test and evaluate the robot's chosen functionalities and to see how the painters would interact with the robot, I built a full-scale 1:1 prototype. To make the robot feel more realistic, a robot base was used by robotics company Dalco Robotics to control the robot's locomotion with a remote control.

Prototype

The goal of the prototype was to create a tangible product for the users to reflect on, rather than a finished product. This meant finding the right balance between finished elements and open-ended, sketch-like features that invited user reflection and input.

Certain parts of the robot, such as the linear actuators, the storage compartment, and the wings, were built in a more complete and functional way. These elements were intentionally designed to be realistic and seem robust, to give participants the idea that these functionalities could work in practice. The prototype was made out of wood, but was given a layer of grey paint to make it seem more robust and capable of carrying the tools.

Other elements, like the user interface buttons, the screen, and the construction light, were deliberately left more open and unfinished. These sketchy components served as prompts for discussion, inviting the workers to imagine how they would want to interact with these elements of the robot in daily use. This created room for creative input, especially around interactions, preferences, and workflows that cannot always be predicted by the designer alone. The sketchier parts encouraged the painters to project their own expectations and ideas onto the design. Rather than presenting a closed solution, the prototype became a co-creative tool. Prototypes are not only useful to showcase the final design, but tools to explore, question, shape and improve ideas with user input.

Co-creation session

The co-creation session is a good example of user-centered design, where the focus is not just on what a robot can do, but what people need it to do. By bringing the prototype into the painters' working environment and using hands-on, scenario-based role play with the co-creation session, the participants were able to interact with the robot assistant directly. It was a visual, easy and intuitive method of reflecting on the design. The participants just responded to what they saw and experienced, sharing what they liked, disliked, and what else the robot might be able to do. The robot's ability to move around the worksite, remotely controlled by the assistant researcher, combined with functioning elements like the lifting mechanism, made it feel more real and autonomous. This sense of realism helped participants imagine more practical and believable interactions. The painters seemed skeptical initially but became enthusiastic once they saw the robot in action.

However, the session also encountered challenges. During the session, it was difficult to let the workers think about new functionalities. Reflecting on what was there was easy, but thinking about things that aren't there is more difficult for them. It required careful facilitation to prevent the researcher from becoming too directive, while still supporting participants that struggled with creative or abstract thinking.

Despite these challenges, the co-creation session was a useful tool to gather user feedback and also demonstrated how interactive prototypes can stimulate design thinking, even among users unfamiliar with robotics or speculative design.

Interaction and aesthetics evaluation

The user evaluations of interaction and aesthetics performed at the end of the project provided valuable insights into how the robot concept was received and how it could be further refined. By using visual tools like storyboards and mood boards, the studies made it easier for painters to visualise the concept and give feedback, even if they don't usually think in a creative or design-focused way. Including both a younger and an older painter was helpful to compare different views and ways of using technology. Letting them do the activity together helped them talk more openly, although it's important to make sure both participants are equally involved.

There were also some limitations. The storyboard only showed one way of interacting with the robot, while there were different ways painters could interact with it. Also, only two painters joined the study, so the findings don't represent the full range of users. The presence of the project manager might have influenced what the painters said, so in the future, separate sessions might be better.

The mood board activity worked well because painters found it easier to respond to images than describe their preferences with words. It helped them talk about both what they liked and what they didn't like. However, it was a subjective method, and the results depend a lot on how the images, axes, and words were chosen by the designer. Especially the older painter was overwhelmed with all of the images, so using fewer, clearer images and larger print could help.

Looking back, this project showed me how important it is to involve users early and often in the design process. Each study helped me better understand what painters really need, and informed me how to design their ideal robot assistant that adds value to their context and is accepted into their work routine.

9.2 CONTRIBUTIONS

A message to fellow designers
Before this project, I had little experience with designing robots. I barely knew anything about their possibilities or the typical components they're made of. The idea of designing a full robot felt quite intimidating to me as a designer. In the end, that lack of knowledge turned out to be more of an advantage than a limitation. It kept me from being constrained by existing standards or falling into clichés about what a robot is supposed to be.

As a designer, you approach robot design differently than an engineer. You act as the bridge between technology and the human user. By using a user-centered design approach, the values of different stakeholders are brought into the design process. You're also able to look beyond just the logical functionalities of a robot and add deeper value to the product. A designer can identify how the worker might want to interact with the robot and design that interaction in an intuitive, human-centered way.

Designers also bring imagination into the process. They can sketch out scenarios, visualise or simulate future use, and make problems visible that others might overlook. They can also encourage users to think along and reflect, even if those users aren't used to doing that. This helps ensure that the final solution fits better with real-world practice and aligns with the user's actual needs.

In short: don't be intimidated by designing complex products like robots. It's exactly your fresh perspective, empathy, and visual thinking skills that make you essential in the design process.

10 CONCLUSION AND RECOMMENDATIONS

The objective of this project was to design a robotic assistant that enhances the safety and health of professional painters by supporting them with physically demanding tasks. Initially, the assignment was framed with the goal of designing a robot that would support painters in their traditional craftsmanship culture while reducing physical strain. Looking at the opportunities from prior research, three key design goals were formulated to design the robot's desired functionalities, interaction and embodiment. This chapter concludes some of the key insights from the design process and recommendations for future work.

Through background research and contextual analysis, insights were gathered about the different painting contexts and the challenges each context has. What all contexts have in common, is that the work is physically demanding, taking a toll on the painters' bodies. Tasks such as carrying heavy materials to the worksite, lifting paint buckets, and working in uncomfortable positions contribute to physical strain. The repetitive work can also be mentally taxing. As the profession is known for its physical demands, it struggles to attract younger workers, and the aging painters are increasingly prone to physical complaints.

Some interesting general insights was that there is a rooted tradition and that the painters, especially the older generation, are reluctant to change. This can be seen in the adoption of safety equipment. In the industrial context, safety regulations are much stricter due to the more hazardous working conditions, including exposure to toxic gases and high temperatures. The work environment in industrial settings is often cramped, with obstructing pipelines and metalwork, requiring painters to climb and crawl to access certain areas. While painters are generally resistant to the idea of a robot taking over painting tasks, believing that robots cannot replicate the precision of handwork, they are open to the concept of a supportive robot cart. This robot could function as a personal toolbox, keeping materials close at hand and helping to organise them efficiently.

Due to the variety in needs between the industrial context and the residential and commercial contexts, the scope of the project was narrowed to focus on the residential and commercial contexts, where a robot cart could have the most immediate impact. It also led to the refinement of the design vision:

“I want to design a flexible and versatile robotic assistant that reduces the physical strain and boosts efficiency, so that painters can focus on the craftsmanship they love.”

With the new design vision, the robot enhances safety and health by addressing the physical challenges painters face in their work, supports painters' craftsmanship without disrupting their traditional work methods, and is easily integrated into painters' work environments, ensuring acceptance into their daily routines. From the design vision, the design requirements and wishes followed and were expanded as the research progressed.
After exploring various functionalities through ideation and concept evaluations, a clearer vision for the design direction was formulated, defining its core functionalities. The robot would assist the painter by organising and carrying tools and materials, helping with transport via scaffolding lifts, and staying close to the painter on the job site to always have their materials readily available. With its ability to assist with physical tasks and keep materials organised, the robot aimed to enhance the painter's efficiency and well-being while reducing the physical load. Additional functionalities, such as charging empty batteries, lighting up the workspace, and assisting with translation between colleagues or tenants, tackle other challenges painters face in the workspace.

The design was continuously evaluated and iterated through multiple user evaluations, with features like measuring temperature and humidity levels being added based on feedback. Other improvements included rethinking the access to the storage container and the robot’s ability to secure items during transportation. The evaluations also provided valuable insights into how the robot should interact with the painters. For example, painters wanted to maintain control of the robot's behaviour by commanding it through different modes, like the follow-mode, work-mode, and park-mode.

After the co-creation session, a storyboard was developed to visualise the collaboration between the painter and the robot. This storyboard was further refined based on feedback from the painters. One key insight was to remove the functionality for the robot to retrieve items from the storage container autonomously, as both the painters and project leader expressed concerns about the robot moving independently and potentially damaging personal property. The painters also suggested an option to receive weather reports at the start of the workday to improve planning their tasks. Finally, aesthetic preferences were gathered to ensure the robot's embodiment aligned with the needs and preferences of the users. This study informed that the robot should be both sleek and elegant, without many textures to avoid dust and paint from collecting, and robust to overcome obstacles and different terrain types. It was also important that the robot should stand out in the workspace to avoid collisions and injuries.

All these evaluations and iterations led to the final design presented in Chapter 8, where the final suggestions were made about materials, production, assembly and cost price.

10.1 RECOMMENDATIONS FOR FUTURE WORK

While this project has provided valuable insights into the desirability and usability of a robotic assistant for painters, several important areas remain underexplored. This primarily concerns the feasibility and viability of the product, which must be addressed before moving toward real-world implementation.

Feasibility and Design for Manufacturing
Although the final design considers some aspects of manufacturability, further development is needed to prepare the robot for mass production. A dedicated design for manufacturing phase is recommended, in which materials, components, and assembly methods are critically assessed and optimised for cost-effective, scalable production. This process could be done by an experienced industrial product designer or through collaboration with a specialised design or engineering agency. Particular attention should be given to the integration of electronics, robustness for construction site conditions, and modularity for easy maintenance and repair.

User interface and interaction design
The user interface and interaction were shaped by input from painters during this project, leading to the design of several conceptual screen interfaces. However, as UI/UX design was not a core expertise in this study, it is advised that an interaction designer further develops and tests the interface and the interaction in general. The current screen designs should serve as a starting point for usability testing, focusing on intuitiveness and simplicity. Testing should also evaluate the effectiveness of the proposed robot control modes (follow-mode, work-mode, park-mode) and how seamlessly they fit into daily routines.

Future testing
Although painters verbally confirmed the robot's usefulness and advantages during final evaluations, it is strongly recommended to validate its effectiveness through in-context testing. These tests can provide measurable data on how much time and physical effort the robot actually saves during various tasks. This type of testing can reveal where the robot delivers the most value, where it saves the most time, where it reduces the physical strain, or increase safety, and where its assistance may be less necessary. The results of this research can inform the set-up of these tests. The in-context test outcomes can help convince investors and project leaders to use the robot in all or specific situations.

Recommendation to future user tests
Future user evaluations should have a broader representation of the target user group, particularly in terms of age and experience. The research revealed that attitudes toward technology and change can vary between younger and older painters. Including both younger and older painters in user evaluations will lead to a more inclusive design that accommodates different comfort levels and preferences related to new technologies.

Viability
Besides feasibility, more research should be done around the viability of the product. While the painters and project leaders expressed their interest in buying the product, their budget expectations were relatively low (between €2,500 and €3,500). To assess whether this product can be brought to market successfully, further research should be conducted into the potential business model. This includes market segmentation, pricing strategies, competitive positioning, and identifying the value proposition for different stakeholders (e.g., painters, employers, rental companies). Operational questions such as ownership models, service and repair logistics, and responsibility for maintenance on-site should also be researched.

Technical and safety validation
As the design becomes more concrete, technical validation will be necessary to ensure the safety and durability of the robot. This includes not only physical testing of prototypes in real-world environments but also regulatory assessments related to robotics and job site safety. Future work could explore weather resistance, resistance to dust and paint, battery life, and system reliability to ensure the robot can meet the demands of daily use in painting contexts. In addition, an analysis of applicable safety standards and regulatory requirements is needed to determine whether the robot meets all necessary legal and operational criteria.

11 REFERENCES

Abras, C., Maloney-Krichmar, D., & Preece, J. (2004). User-centered design. Bainbridge, W. Encyclopedia of Human-Computer Interaction. Thousand Oaks: Sage Publications, 37(4), 445-456.

Adams, W. C. (2015). Conducting semi-structured interviews. Handbook of practical program evaluation, 492-505.

Anand, G., & Kodali, R. (2008). Benchmarking the benchmarking models. Benchmarking: An international journal, 15(3), 257-291.

Antwi-Afari, M. F., Li, H., Edwards, D. J., Pärn, E. A., Seo, J., & Wong, A. Y. L. (2017). Biomechanical analysis of risk factors for work-related musculoskeletal disorders during repetitive lifting task in construction workers. Automation in Construction, 83, 41–47.

Artizono. (2024, June 28). Sheet metal fabrication costs: Get the estimate. https://artizono.com/sheet-metal-fabrication-costs/

Bentley, J., & Turner, G. P. A. (1997). Introduction to paint chemistry and principles of paint technology. CRC press.

Bergsten, E. L. (2021). Ergonomic risk assessment of painters' work tasks-smoothing, sanding and painting. Högskolan i Gävle; Scanspac.

Breazeal, C., Dautenhahn, K., & Kanda, T. (2016). Social robotics. Springer handbook of robotics, 1935-1972.

Burnard, P. (1991). A method of analysing interview transcripts in qualitative research. Nurse education today, 11(6), 461-466.

CAO-Partijen SAG (2025, January). Cao voor het schilders-, afwerkings-, vastgoedonderhoud- en glaszetbedrijf in Nederland 2021 – 2025.

Christensen, H. I. (n.d.). Henrik I Christensen. Henrik I Christensen. http://www.hichristensen.net/

Construction Robotics. (2021, July 17). SAM - Bricklaying made simpler and safer. - Smart Lifting for Construction and Masonry - Construction Robotics. https://www.construction-robotics.com/sam-2/

Dalco Robotics. (n.d.). Dalco Drive. https://dalcorobotics.nl/#dalcodrive

Elsden, C., Chatting, D., Durrant, A. C., Garbett, A., Nissen, B., Vines, J., & Kirk, D. S. (2017, May). On speculative enactments. In Proceedings of the 2017 CHI conference on human factors in computing systems (pp. 5386-5399).

ERI Economic Research Institute. (2025, May 6). Factory Worker Salary in Netherlands. https://www.erieri.com/salary/job/factory-worker/netherlands

FANUC. (n.d.). M-900 Series. https://www.fanuc.eu/eu-en/m-900-series

Hedberg & Boulton, P.C. (2022, January 12). The health and safety risk of professional painting. https://www.hedberglaw.com/blog/2022/01/the-health-and-safety-risk-of-professional-painting/

Hoogendijk, F. (2024, February). (rep). Final report Advanced Concept Design. Delft: TU Delft.

IFR International Federation of Robotics. (n.d.-a). Standardisation. https://ifr.org/standardisation

IFR International Federation of Robotics. (n.d.-b). Industrial robots. https://ifr.org/industrial-robots

IFR International Federation of Robotics. (n.d.-c). Service robots. https://ifr.org/service-robots

Indeed (n.d.). Primary vs. secondary stakeholders: What's the difference? https://www.indeed.com/career-advice/career-development/primary-and-secondary-stakeholders

Innoway Robotics (n.d.). Keenon T8. https://www.innowayrobotics.nl/keenon-t8-47/

IMS. (2022, September 7). Injection Molding Materials Selection Guide. https://ims-tex.com/injection-molding-materials-selection-guide/

iRobot. (n.d.). Roomba® robotstofzuiger. https://www.irobot.nl/nl_NL/nl/roomba-robotstofzuiger

Ishiguro, H., Ono, T., Imai, M., Maeda, T., Kanda, T., & Nakatsu, R. (2001). Robovie: an interactive humanoid robot. Industrial robot: An international journal, 28(6), 498-504.

JC Fasteners. (2020, April 29). Joining techniques for plastics. https://www.jcfasteners.com/joining-techniques-for-plastics/

Koge Vinas, M., Mannetje, A. & Cordier, S. (2003). Occupation and bladder cancer among men in Western Europe. Cancer, causes & control, 907- 914.

Komaspec. (n.d.). An Engineers' Guide to Sheet Metal Bending. https://www.komaspec.com/about-us/blog/guide-to-sheet-metal-bending/

Moravec, & Peter, H. (2025, April 13). Robot | Definition, History, Uses, Types, & Facts. Encyclopedia Britannica. https://www.britannica.com/technology/robot-technology

Murphy, R. R., Nomura, T., Billard, A., & Burke, J. L. (2010). Human–robot interaction. IEEE robotics & automation magazine, 17(2), 85-89.

MUZUS. (2024). (rep). Designing Smart Agents to Sustain Professional Painting Practices.

Padasak, Z. (2023, June 1). Top 10 Advantages and Disadvantages of Additive Manufacturing. https://www.alphaprecisionpm.com/blog/top-10-advantages-and-disadvantages-of-using-additive-manufacturing

Peshkin, M., & Colgate, J. E. (1999). Cobots. Industrial Robot: An International Journal, 26(5), 335-341.

Plasticker. (n.d.). Raw materials & prices. https://plasticker.de/preise/pms_en.php?kat=Mahlgut&aog=A&show=ok&make=ok

Prati, E., Peruzzini, M., Pellicciari, M., & Raffaeli, R. (2021). How to include User eXperience in the design of Human-Robot Interaction. Robotics and Computer-Integrated Manufacturing, 68, 102072.

Prusa Research. (2020, October 13). 3D Printing Price Calculator. https://blog.prusa3d.com/3d-printing-price-calculator_38905/

Qviro. (2024, August 22). What is the Price of a Service Robot Cost? - Qviro Blog. Qviro Blog - How to purchase industrial technology. https://qviro.com/blog/service-robot-price/

Rehber, E., Bosch, T., Klönhammer, L., & Tu, L. (2023). (rep.). Annoyances and health issues in painters. Delft: TU Delft.

Richtsmeier, S. (2025, January 27). How to start a painting business with expert advice from painters enterprise. Jobber. https://www.getjobber.com/academy/painting/how-to-start-a-painting-business/

Robots Guide (2023a, December 19). Wakamaru. ROBOTS: Your Guide to the World of Robotics. https://robotsguide.com/robots/wakamaru

Singh, G., & Banga, V. K. (2022). Robots and its types for industrial applications. Materials Today: Proceedings, 60, 1779-1786.

SyBridge Technologies (2023, June 28). Advantages and disadvantages of injection molding. https://sybridge.com/advantages-and-disadvantages-injection-molding/

Stichting Uitvoeringsregelingen SAG. (2024, July 15). Over ons. https://www.susag.nl/over-ons/

Toelkes, R. (2023, January 16). Day in the life of a professional painter - painting careers. Kansas City Commercial & Residential Painting Company. https://kcneighborhoodpainting.com/lifestyle-of-a-painter/

Umor, A., Righteous, I., & Elechi, C. E. (2021). Occupational health hazards of painters. In Occupational health hazards and diseases of painters (pp. 3–15). essay, LAP LAMBERT Academic Publishing.

Van Dale Nederland. (n.d.). Robot. https://www.vandale.nl/gratis-woordenboek/nederlands/betekenis/robot

Van Rijn, R. M., Huisstede, B. M., Koes, B. W., & Burdorf, A. (2010). Associations between work-related factors and specific disorders of the shoulder—a systematic review of the literature. Scandinavian journal of work, environment & health, 189-201.

VeDoSign. (n.d.). T8 Delivery Robot Small. https://vedosign.com/product/t8-delivery-robot-small/

Wenming Machinery (n.d.). Coco delivery robots for restaurant. https://wmmachinery.com/products/coco-delivery-robots-for-restaurant

Benchmarking

ABB (n.d.) YUMi Robot | Dual-Arm Collaborative Robots | Single-Arm Collaborative Robots. https://new.abb.com/products/robotics/robots/collaborative-robots/yumi

Agility robotics. (n.d.). Meet Digit. https://www.agilityrobotics.com/

Boston Dynamics. (n.d.). Spot. https://bostondynamics.com/products/spot/

Maric, B., Mutka, A., & Orsag, M. (2020). Collaborative human-robot framework for delicate sanding of complex shape surfaces. IEEE Robotics and Automation Letters, 5(2), 2848-2855.

Matsuo, I., Shimizu, T., Nakai, Y., Kakimoto, M., Sawasaki, Y., Mori, Y., ... & Miyamoto, T. (2020). Q-bot: Heavy object carriage robot for in-house logistics based on universal vacuum gripper. Advanced Robotics, 34(3-4), 173-188.

OTTO Motors (n.d.) Level up your material handling with autonomous mobile robots | OTTO by Rockwell Automation. https://ottomotors.com/

Rani, A. J., Sumalatha, A., Preethi, S. A., Indhu, R., Jayaprakash, M., & Preetha, M. (2024). Innovations in robotic technology: A smart robotic design for effortless wall painting using artificial intelligence. 2024 International Conference on Automation and Computation (AUTOCOM), 267–271.

Robots Guide (2023b, December 19). Proteus. ROBOTS: Your Guide to the World of Robotics. https://robotsguide.com/robots/proteus

Robots Guide (2024, May 31). UR. ROBOTS: Your Guide to the World of Robotics. https://robotsguide.com/robots/universal

Scalera, L., Seriani, S., Gasparetto, A., & Gallina, P. (2019). Watercolour robotic painting: a novel automatic system for artistic rendering. Journal of Intelligent & Robotic Systems, 95, 871-886.

Softbank Robotics America. (n.d.). A Whiz at commercial cleaning. https://us.softbankrobotics.com/whiz

Teledyne FLIR. (n.d.). PackBot 510. https://www.flir.eu/products/packbot/

APPENDICES

APPENDIX A. APPROVED PROJECT BRIEF

DESIGN FOR our future

TU Delft

IDE Master Graduation Project

Project team, procedural checks and Personal Project Brief

In this document the agreements made between student and supervisory team about the student's IDE Master Graduation Project are set out. This document may also include involvement of an external client, however does not cover any legal matters student and client (might) agree upon. Next to that, this document facilitates the required procedural checks:

- Student defines the team, what the student is going to do/deliver and how that will come about
- Chair of the supervisory team signs, to formally approve the project's setup / Project brief
- SSC E&SA (Shared Service Centre, Education & Student Affairs) report on the student's registration and study progress
- IDE's Board of Examiners confirms the proposed supervisory team on their eligibility, and whether the student is allowed to start the Graduation Project

STUDENT DATA & MASTER PROGRAMME
Complete all fields and indicate which master(s) you are in

Family name	Jansen	7312	IDE master(s) IPD ✔ Dfl ☐ SPD ☐
Initials	F		2nd non-IDE master
Given name	Fleur		Individual programme *(date of approval)*
Student number	4847776		Medisign ☐
			HPM ☐

SUPERVISORY TEAM
Fill in he required information of supervisory team members. If applicable, company mentor is added as 2nd mentor

Chair	[redacted]	dept./section	MD
mentor	[redacted]	dept./section	HICD
2nd mentor			
client:	Stichting Uitvoeringsregelingen SAVG		
city:	Delft	country:	Netherlands
optional comments			

! Ensure a heterogeneous team. In case you wish to include team members from the same section, explain why.

! Chair should request the IDE Board of Examiners for approval when a non-IDE mentor is proposed. Include CV and motivation letter.

! 2nd mentor only applies when a client is involved.

APPROVAL OF CHAIR on PROJECT PROPOSAL / PROJECT BRIEF -> to be filled in **by the Chair** of the supervisory team

Sign for approval (Chair) [redacted]

Name [redacted] Date 4 Sep 2024 Signature

CHECK ON STUDY PROGRESS

To be filled in **by SSC E&SA** (Shared Service Centre, Education & Student Affairs), after approval of the project brief by the chair. The study progress will be checked for a 2nd time just before the green light meeting.

Master electives no. of EC accumulated in total _____ EC

Of which, taking conditional requirements into account, can be part of the exam programme _____ EC

★	**YES**	all 1st year master courses passed
	NO	missing 1st year courses

Comments:

Sign for approval (SSC E&SA)

[redacted] [redacted] 2024.09.04 15:43:34 +02'00'

Name [redacted] Date 4-9 Signature

APPROVAL OF BOARD OF EXAMINERS IDE on SUPERVISORY TEAM -> to be checked and filled in by IDE's Board of Examiners

Does the composition of the Supervisory Team comply with regulations?

YES	★	Supervisory Team approved
NO		Supervisory Team not approved

Comments:

Based on study progress, students is ...

★	**ALLOWED** to start the graduation project
	NOT allowed to start the graduation project

Comments:

Sign for approval (BoEx)

[redacted] Digitally signed by [redacted] Date: 2024.09.05 10:47:04 +02'00'

Name [redacted] Date 5/9/2024 Signature

DESIGN FOR our future

TUDelft

Personal Project Brief – IDE Master Graduation Project

Name student Fleur Jansen **Student number** 4847776

PROJECT TITLE, INTRODUCTION, PROBLEM DEFINITION and ASSIGNMENT

Complete all fields, keep information clear, specific and concise

Project title Designing a robot for professional painters that supprts physical demanding tasks to ensure their health

Please state the title of your graduation project (above). Keep the title compact and simple. Do not use abbreviations. The remainder of this document allows you to define and clarify your graduation project.

Introduction

Describe the context of your project here; What is the domain in which your project takes place? Who are the main stakeholders and what interests are at stake? Describe the opportunities (and limitations) in this domain to better serve the stakeholder interests. (max 250 words)

Professional painting is a physically demanding job where most painters don't work until retirement age because of their sustained injuries. This project aims to find a robotic solution to support professional painters, while honouring the craftmanship traditions of the profession.

The main stakeholders in this project are professional painters, the employers of the painters and the client SUSAG. The professional painters value the quality of their work over everything, followed by speed. They want a solution that is easy to use, that will support them with physically demanding tasks and maintaining the right posture. They also value having control over the robot (MUZUS, 2024a). Due to the high demand, the employers must make a trade-off between quality and speed, where often quality is reduced. This clashes with the quality priority of the painters. Employers care for a solution that is profitable and worth investing in. SUSAG cares about improving the safety and health of painters.

Implementing robots can greatly enhance the health and safety of professional painters by making their work easier, lighter and healthier, thus reducing the risk of injury and extending their careers. Additionally, robots can support rather than replace human painters, preserving craftsmanship while using technological advancements to improve working conditions, safety and efficiency. However, the painting industry is characterised by a deeply rooted traditional work culture, which is an obstacle to change and innovation and resists them from adopting new technologies and solutions. Although the younger generation of painters generally is more open to technological advancements, they perceive themselves as traditional and this is something that will most likely remain (MUZUS, 2024b).

References:

MUZUS. (2024a). (rep). Designing Smart Agents to Sustain Professional Painting Practices (pp 57).

➔ *space available for images / figures on next page*

introduction (continued): space for images

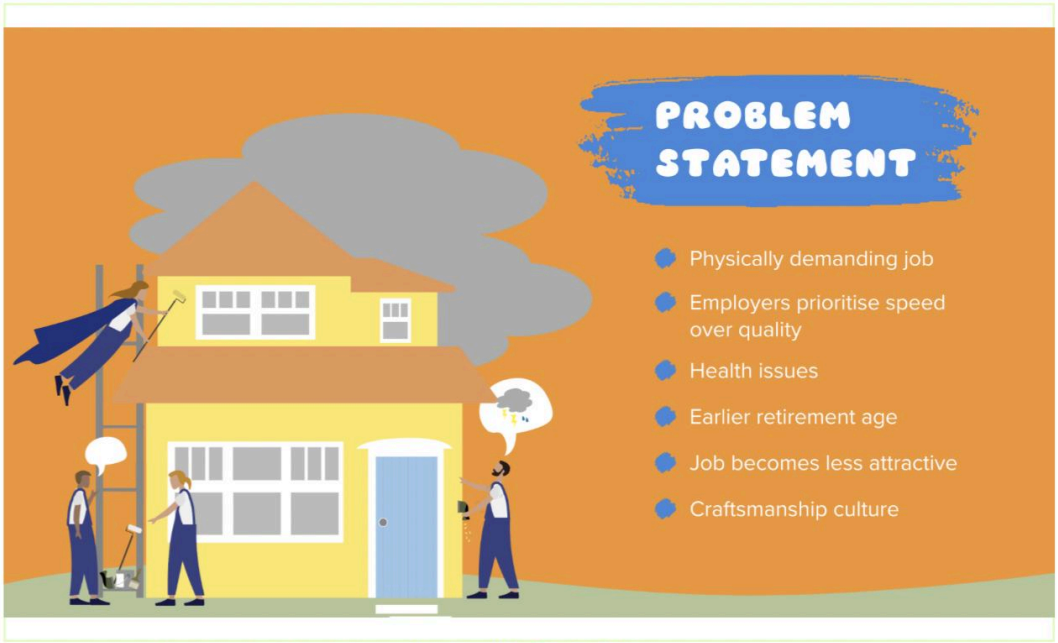

image / figure 1 Challenges in the painting profession (MUZUS, 2024)

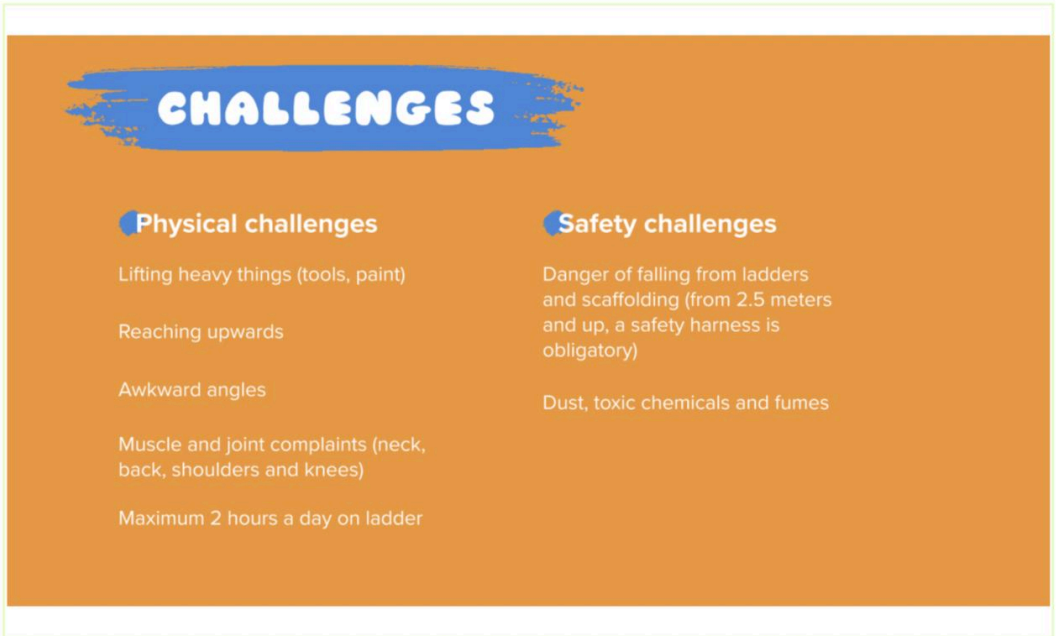

image / figure 2 Physical and safety challenges of painting (Payroll-professionals, 2015) (Hedberg & Boulton,

DESIGN FOR our future

TU Delft

Personal Project Brief – IDE Master Graduation Project

Problem Definition

What problem do you want to solve in the context described in the introduction, and within the available time frame of 100 working days? (= Master Graduation Project of 30 EC). What opportunities do you see to create added value for the described stakeholders? Substantiate your choice.
(max 200 words)

Many painters face health issues due to the physical demands of their work. While it is the painters' responsibility to look after their health, the strain of the job often takes a toll, and many painters don't work until retirement age. Besides that, the work is becoming less attractive for young painters, as they have a lower tolerance for physically demanding tasks than the older generation. We also see a change in approaching certain tasks, in which the older generation perceives the younger as weaker. Professional painters also face pressure to meet employers' expectations for quick production while the painters value delivering high-quality work. (MUZUS, 2024)

Within my graduation project, I aim to design a robot that enhances the safety and health of professional painters by supporting them with physically demanding tasks. By maintaining close contact with painters through multiple user studies, I will determine and design the robot's desired functionalities and build prototypes of its mechanisms to test its feasibility. Furthermore, I will explore the interaction between the painter and the robot and design its embodiment to ensure it aligns with and is accepted by the traditional craftsmanship culture. With a robotic solution, we can boost efficiency while maintaining quality to serve numerous customers, all while prioritising the well-being and safety of painters, and making the job more attractive for future painters.

Assignment

This is the most important part of the project brief because it will give a clear direction of what you are heading for. Formulate an assignment to yourself regarding what you expect to deliver as result at the end of your project. (1 sentence) As you graduate as an industrial design engineer, your assignment will start with a verb (Design/Investigate/Validate/Create), and you may use the green text format:

Design a robot that enhances the safety and health of professional painters by supporting them with physically demanding tasks. Design the desired functionalities, interaction and embodiment of the robot for it to be accepted into their traditional craftsmanship culture.

Then explain your project approach to carrying out your graduation project and what research and design methods you plan to use to generate your design solution (max 150 words)

Three main goals can be described within my project:

1. Designing the functionalities of the robot. To determine the robot's functionalities, I will first conduct literature research and look at state-of-the art solutions. A function analysis will be used to develop a function structure. Once the functionalities are selected, I will brainstorm and develop concepts to achieve these goals. The concepts are evaluated through user research and further developed with prototypes.

2. Designing the interaction between robot and painter. I want to develop a design vision to describe the future interaction between robot and painter. The vision can be developed using the ViP-method.

3. Designing the embodiment of the robot by using the design vision, form-finding and interviews with the painters. The embodiment will be visualised using (digital) visualisations and a CAD model.

Project planning and key moments

*To make visible how you plan to spend your time, you must make a planning for the full project. You are advised to use a Gantt chart format to show the different phases of your project, deliverables you have in mind, meetings and in-between deadlines. Keep in mind that all activities should fit within the given run time of 100 working days. Your planning should include a **kick-off meeting**, **mid-term evaluation meeting**, **green light meeting** and **graduation ceremony**. Please indicate periods of part-time activities and/or periods of not spending time on your graduation project, if any (for instance because of holidays or parallel course activities).*

Make sure to attach the full plan to this project brief.
The four key moment dates must be filled in below

Kick off meeting	03-09-2024
Mid-term evaluation	21-11-2024
Green light meeting	24-02-2025
Graduation ceremony	9 april

In exceptional cases (part of) the Graduation Project may need to be scheduled part-time. Indicate here if such applies to your project

Part of project scheduled part-time	✔
For how many project weeks	29
Number of project days per week	3.5

Comments:

Motivation and personal ambitions

Explain why you wish to start this project, what competencies you want to prove or develop (e.g. competencies acquired in your MSc programme, electives, extra-curricular activities or other).

Optionally, describe whether you have some personal learning ambitions which you explicitly want to address in this project, on top of the learning objectives of the Graduation Project itself. You might think of e.g. acquiring in depth knowledge on a specific subject, broadening your competencies or experimenting with a specific tool or methodology. Personal learning ambitions are limited to a maximum number of five.
(200 words max)

I am excited to start this project because I am personally motivated to improve the well-being of others. As a designer, I am driven to make a positive impact on unhealthy working environments. Taking on a user-centered approach, I stay in contact with the stakeholders throughouut the project's various phases of the project to ensure the effectiveness of the product.

In this project, I would like to deepen my understanding regarding feasibility. I want to prove the feasibility of the product by using prototypes. I intend to make my process and ideas highly visual to be able to communicate my ideas to others throughout the entire design process. Besides prototyping, I want to improve my CAD modelling and rendering skills. At the end of the project, I would like to make aesthetic renders of my final product.

APPENDIX B. ROBOT CART



Painters carrying the paint bucket while painting (a), painter lifting the ladder and paint buckets to the next painting spot (b,c), painter stepping off the ladder and bending to dip brush in the paint every few minutes (d).

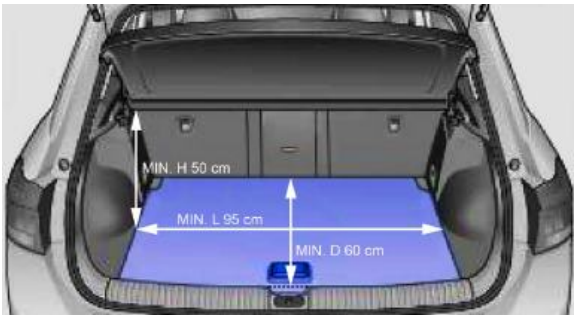

Measurements of a trunk

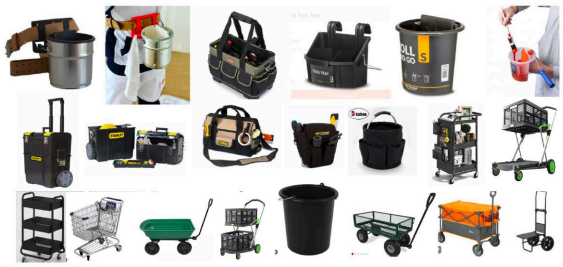

Market exploration



Function exploration

Iteration of the final product. Painters don't like a very bulky and square look and feel.

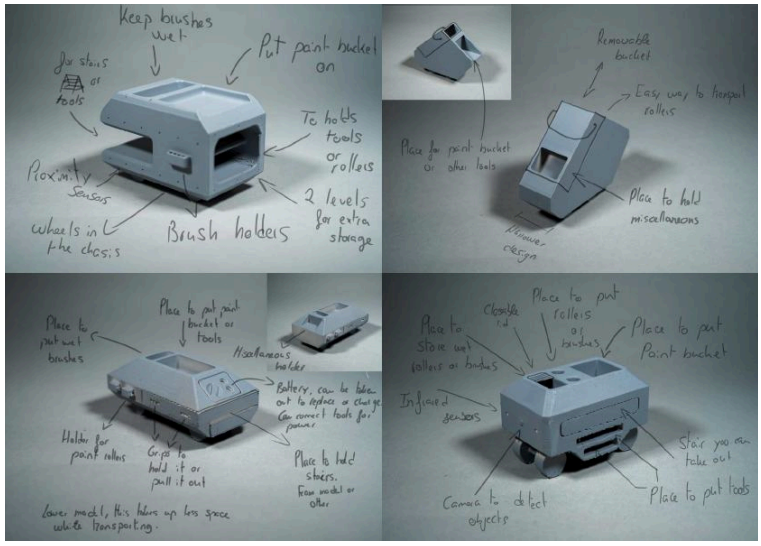

Ergonomics experiment
Found out the ideal heights for painters when painting on their knees, standing and using stairs. For lower positions, this is as low as possible.

Sitting: 25-41 cm
Standing: 90-102 cm
On stairs: 160-171 cm

Main features

- Hydraulic piston to lift buckets (13)
- Heating element to keep paint the right temperature (16)
- Proximity sensors to be aware of environments and obstacles and to track and keep a preferred distance to painter (14)
- Battery feature to charge tools and be independent from the power of tenants (10)
- Slot for 2-step stairs (4)
- Tub to keep brushes wet (11)
- Space to place small things (12)
- Interaction through phone or wristband

Measurements
Width: 50 cm
Length: 85 cm
Height, min: 50 cm
Height, max: 170 cm

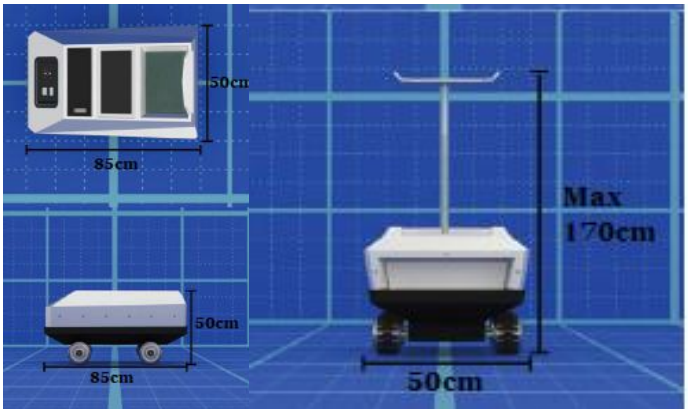

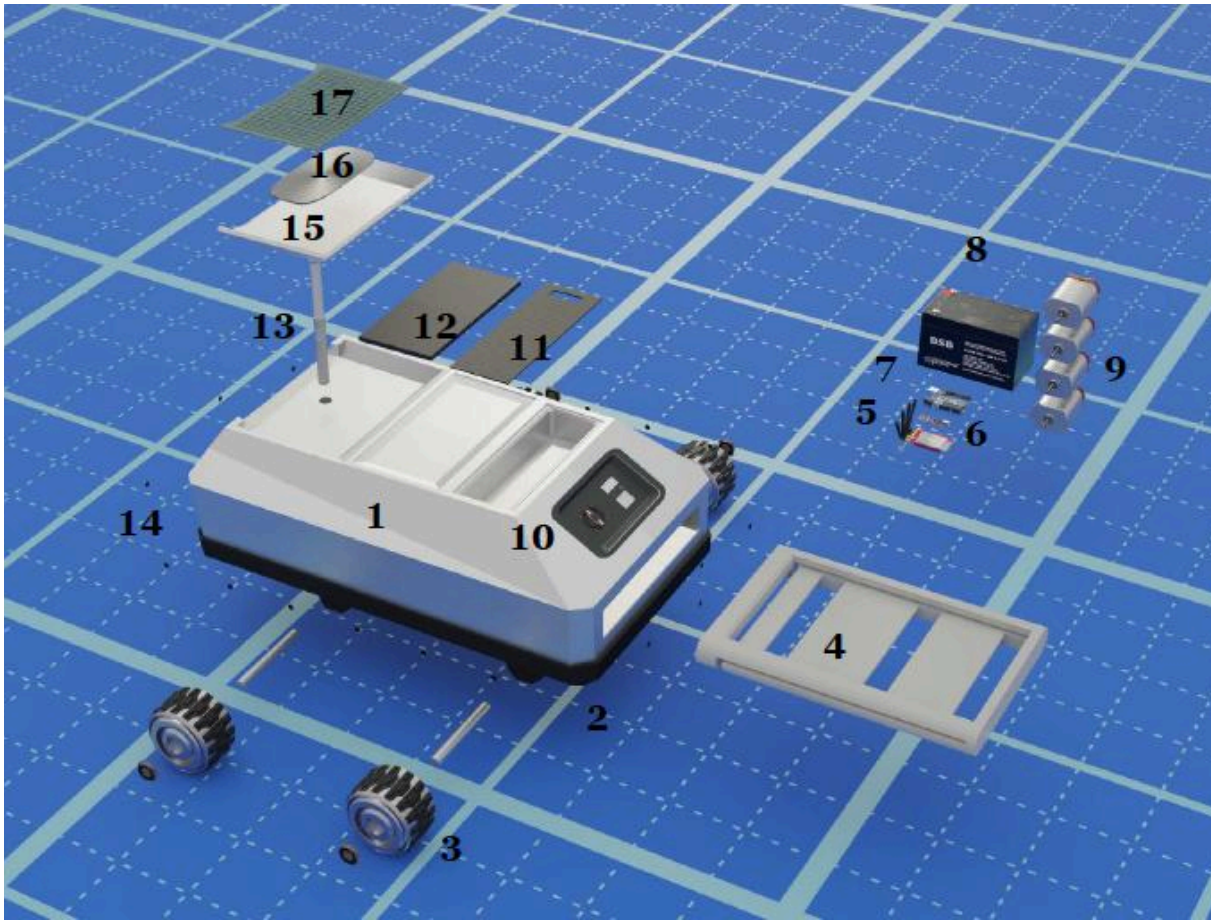

1. The main body of the robot.
2. Rubber protector part.
3. 4X wheels with nuts.
4. 2-Step stairs.
5. Arduino module.
6. Gps module.
7. Bluetooth and wifi module.
8. Battery.
9. 4x DC motor.
10. Control panel with 2 outlets and an on/off button.
11. Lid of wet brushes tub.
12. Soft plastic sleeve
13. Hydraulic piston
14. Proximity sensors
15. Arm for paint bucket.
16. Heating element.
17. Rubber/Silicone sleeve

Keeping paint at room temperature
After working in cold weather, that the paint coagulates (in Dutch = ”stollen”) and does not stick well on the wall. The opposite effect happens in the summer when the paint dilates too much or more water is needed which worsens the output result. Because of this, it is not possible to work when the temperature drops below -1 degrees. The thermistor ensures consistent quality in both hot and cold conditions, while also improving speed and efficiency by allowing painters to work when they normally couldn’t. This reduces the chance of delays and interruptions.

It would be difficult to measure temperature of paint, so it would be ideal to manually adjust the temperature on the robot.

APPENDIX C. CAO

CAO-Partijen SAG (2025)

Artikel 1.4: Werkingssfeer
Onder uitoefening van het schilders-, afwerkings- en glaszetbedrijf wordt verstaan het bedrijfsmatig verrichten van een of meer der volgende werkzaamheden:

a. het aan of in roerende en onroerende goederen aanbrengen van verven, lak, coatings of soortgelijke producten, ongeacht de applicatiemethode- of techniek, alsmede het verrichten van de daarbij behorende werkzaamheden ter voorbereiding en nabewerking, zoals het repareren, egaliseren, schoonmaken, voorbehandelen, reinigen, ontvetten, ontroesten, aanbrengen van grondlagen, hechtlagen en tussenlagen en het vervoeren, opstellen, demonteren en monteren van objecten;

b. het aanbrengen van behangsel en andere te plakken afwerkingsmaterialen, het beschermen en verfraaien van wanden en/of plafonds met wandbekledingsmaterialen, maar uitgezonderd vloerbedekking, betimmeringen en gordijnen, alsmede het verrichten van de daarbij behorende werkzaamheden ter voorbereiding en nabewerking, zoals het verwijderen van oude wandbekleding, repareren en uitvlakken van wanden en het aanbrengen van tussenlagen;

c. het plaatsen van al of niet isolerende beglazing, beglazingssystemen en glasconstructies (puien, wanden, deuren, ramen), zowel in bestaande als nieuwe kaders, alsmede de daarbij behorende werkzaamheden ter voorbereiding en nabewerking, zoals verwijderen van bestaand glas en kit, plaatsen van noodvoorzieningen, repareren van kaders en/of kozijnen, glaslatten, hang- en sluitwerk, afwerken met kit, afdichting met rubber en schoonmaken;

d. het isoleren van spouwmuren, dakschotten en vloeren aan en in woningen en gebouwen en andere onroerende goederen;

e. het voor de uitvoering van de werkzaamheden, als genoemd onder a t/m d, kopen en/of in bestelling hebben en/of op voorraad houden van materialen alsmede het incidenteel verkopen van die materialen;

f. het plaatsen van steigers als dit in verband staat met het (doen) verrichten van bovenomschreven werkzaamheden;

g. het direct geven van technische en/of organisatorische leiding aan werknemers bij de uitvoering van de hiervoor omschreven werkzaamheden.

Artikel 1.7: Werkingssfeer
Niet als uitoefening van het schilders-, afwerkings- en glaszetbedrijf in de zin van deze CAO wordt beschouwd:

a. het door industriële bedrijven aanbrengen van verf-, lak- of coatingproducten op de door die bedrijven vervaardigde producten;

b. het uitoefenen van een classificeerbedrijf – waaronder verstaan wordt: 'het bedrijfsmatig ontdoen van ketelsteen of roest en schoonmaken (niet zijnde schilderwerk) en huidverven van vaartuigen en metalen oppervlakken en metalen constructies van schepen (of direct daarmee verband houdende). Onder schoonmaken dient mede verstaan te worden het aanbrengen van een eerste conserveringslaag in verband met zojuist genoemde reinigingswerkzaamheden' – tenzij de uitoefening van deze werkzaamheden geschiedt in een bedrijf waarin het schilders-, afwerkings- en glaszetbedrijf het hoofdbedrijf is;

c. het spuiten van automobielen, tenzij dit geschiedt in een bedrijf, waarin het schilders-, afwerkings- en glaszetbedrijf het hoofdbedrijf is.

d. het in combinatie met het uitoefenen van een groothandel in glas plaatsen van al of niet isolerende beglazing, beglazingssystemen en glasconstructies (puien, wanden, deuren, ramen), zowel in bestaande als nieuwe kaders, alsmede de daarbij behorende werkzaamheden ter voorbereiding en nabewerking, zoals verwijderen van bestaand glas en kit, plaatsen van noodvoorzieningen, repareren van kaders en/of kozijnen, glaslatten, hang- en sluitwerk, afwerken met kit, afdichting met rubber en schoonmaken.

Artikel 3.1
In deze CAO wordt verstaan onder:

a. WERKGEVER: elke natuurlijke of rechtspersoon die, bij een bedrijfsbeoefening als bedoeld in artikel 1 van deze CAO, in Nederland arbeid doet verrichten door een of meer werknemers.

b. WERKNEMER: hij of zij, die in Nederland voor een bedrijf of een afdeling van een bedrijf als bedoeld in artikel 1 van deze CAO, werkzaam is ingevolge een arbeidsovereenkomst;

c. WERKNEMER UTA (UITVOEREND, TECHNISCH EN ADMINISTRATIEF PERSONEEL): de werknemer, hij of zij
die in Nederland voor een bedrijf of een afdeling van een bedrijf als bedoeld in artikel 1 van deze CAO, werkzaam is ingevolge een arbeidsovereenkomst, die uitsluitend of in hoofdzaak een functie vervult of werkzaamheden verricht als beschreven in onder andere de volgende referentiefuncties: administratief medewerker, secretaresse/management assistent, financieel administratief medewerker, office manager, hoofd administratie, controller, materiaal beheerder, werkvoorbereider, calculator, calculator/werkvoorbereider, onderhoudsadviseur/ RGS-adviseur, hoofd bedrijfsbureau, uitvoerder, projectleider of bedrijfsleider dan wel soortgelijke functies.

Artikel 3.2
Niet als werknemer in de zin van deze CAO worden beschouwd:

a. wakers, huishoudelijk personeel, portiers, kantinepersoneel, magazijnbedienden en bezorgers;

b. stagiaires;

c. directeuren, zij die de functie van directeur bekleden;

d. werknemer UTA, die een bruto jaarloon inclusief vakantietoeslag verdienen, dat meer bedraagt dan het maximum premieloon in de zin van Wet financiering sociale verzekeringen. Onder bruto jaarloon wordt verstaan het vaste loon dat op 1 januari van het contractjaar tussen werkgever en werknemer is overeengekomen. Bij de totstandkoming van het dienstverband in de loop van het contractjaar, geldt als bruto jaarloon het loon dat op het moment van indiensttreding tussen werkgever en werknemer als vast loon is overeengekomen;

e. vakantiewerkers. Hieronder worden verstaan de werknemers die als regel dagonderwijs volgen en in de periode mei tot en met augustus voor maximaal 6 weken in dienst van een werkgever zijn.

Artikel 3.3
LEERLING: elke natuurlijke persoon voor wie of door wie een beroepspraktijkvormingsovereenkomst met een bedrijf of opleidingsbedrijf is afgesloten waarbij de werkgever onder de reikwijdte van de werkingssfeer van deze CAO valt;

c. LEERLING-WERKNEMER: een leerling die werkzaam is ingevolge een arbeidsovereenkomst;

Artikel 25.1
Er zijn 36 referentiefuncties verdeeld over 11 functiegroepen. De referentiefuncties en de
functiegroepen zijn opgenomen in bijlage 1 en 2 van deze CAO. De functieomschrijvingen zijn
opgenomen in bijlage 3 van deze CAO (Zie functiebeschrijvingen in Bijlage XX).

Artikel 36.3: Onwerkbaar weer
Onder onwerkbaar weer wordt verstaan:

a. Er is sprake van vorst of sneeuwval in de periode van 1 november tot en met 31 maart en één of meer van de volgende vorstnormen is gehaald:

- 1. de gemeten temperatuur is tussen 00.00 uur en 07.00 uur lager geweest dan -3° Celsius;
- 2. de gemeten temperatuur is om 07.00 uur en om 09.00 uur -0,5° Celsius of lager;
- 3. de gemeten temperatuur is om 09.00 uur -1,5° Celsius of lager;
- 4. de gevoelstemperatuur is om 09.30 uur volgens de meting van 09.00 uur -6,0° Celsius of lager. Hierbij hoeft geen sprake te zijn van vorst of sneeuwval.

b. Er is sprake van ijzel volgens de meting van het KNMI-weerstation in het postcodegebied van de bouwplaats.

c. Er is sprake van overvloedige regenval indien het in het postcodegebied waarin de werknemer werkzaam is op een werkdag tussen 07.00 en 19.00 uur ten minste 300 minuten regent;

d. Er is sprake van hitte als een temperatuur van 40 graden Celsius of hoger is gehaald.

Artikel 64.1
De werknemer heeft recht op voorlichting, informatie en onderzoek op het gebied van de veiligheid
en de gezondheid.

Artikel 67.2: Arbeidsomstandigheden
Glas van 25 kilogram of meer dient door minimaal 2 personen te worden geplaatst. Glas boven de 50 kilogram mag alleen met hulpmiddelen worden vervoerd en geplaatst. De werkgever is verplicht deze hulpmiddelen ter beschikking te stellen. Het uitgangspunt is dat er boven 50 kilogram niet handmatig mag worden getild. Boven de 100 kilogram is inzet van mechanische hulpmiddelen altijd vereist.

Artikel 67.3: Arbeidsomstandigheden
In uitzonderlijke gevallen mag glas tot een maximum van 100 kilogram handmatig worden getild, mits aan alle onder a tot en met g van dit lid

genoemde voorwaarden wordt voldaan:

a. alleen bij reparatie of renovatie (nieuwbouwprojecten dienen zo ontworpen te zijn dat mechanisch tillen altijd mogelijk is);

b. indien een kraan of een ander hulpmiddel aantoonbaar niet mogelijk of zelfs onveilig is;

c. de werknemers, minimaal 4, zijn goed op elkaar ingewerkt; 1 werknemer wordt belast met het geven van aanwijzingen;

d. er dient per werknemer voldoende bewegingsruimte te zijn, men mag elkaar niet in de weg lopen;

e. er dient sprake te zijn van een goede begaanbaarheid zonder grotere hoogteverschillen van meer dan 30 centimeter zoals: op- en afstapjes, trappen en ladders;

f. het materiaal goed kan worden vastgepakt bij voorkeur met glaszuigers;

g. het handmatig hanteren van lasten tussen 50-100 kilogram is maximaal 2 keer (= 2 ruiten) per dag.

Artikel 67.4: Arbeidsomstandigheden
Bij werken op een ladder mogen gewichten van maximaal 5 kilogram of voorwerpen van maximaal 1 m² worden vervoerd. Deze beperking geldt niet voor glaszetwerkzaamheden.

Artikel 67.5: Arbeidsomstandigheden
Indien tijdens het werk het dragen van doorwerkpakken noodzakelijk is, zal de werkgever deze aan de betreffende werknemers in bruikleen geven.

Artikel 68.1 en 68.2: Persoonlijke beschermingsmiddelen
De werkgever is verplicht aan zijn werknemers persoonlijke beschermingsmiddelen ter beschikking te stellen. Indien de werkgever deze persoonlijke beschermingsmiddelen niet ter beschikking stelt is de werknemer gerechtigd zijn werk te onderbreken totdat de werkgever alsnog aan zijn verplichtingen voldoet. Gedurende deze onderbreking heeft de werknemer recht op behoud van loon.

Indien de door de werkgever ter beschikking gestelde persoonlijke beschermingsmiddelen niet door de werknemer worden gebruikt, respectievelijk indien de schriftelijk aan de werknemer bekend gemaakte veiligheidsvoorschriften niet worden opgevolgd heeft de werkgever het recht aan de werknemer een van de sancties op te leggen.

APPENDIX D. CAO ROLES

CAO-Partijen SAG (2025)

All roles:

1. Administratief medewerker
2. Secretaresse / managementassistent
3. Financieel administratief medewerker
4. Officemanager
5. Hoofd Administratie
6. Controller
7. **Hulpkracht**
8. Betonbewerker 1
9. Betonbewerker 2
10. Timmerkracht 2 / Houtreparateur
11. Allround Timmerkracht
12. Allround Betonbewerker
13. Timmerkracht 1
14. Glaszetter 1
15. Glaszetter 2
16. Allround Glaszetter
17. Specialist Glaszetter
18. **Voorman/teamleider**
19. **Uitvoerder**
20. **Projectleider**
21. Bedrijfsleider
22. Metaalconservering 1
23. Metaalconservering 2
24. Constructieschilder
25. Straler
26. Spuiter
27. Schilder 1
28. Schilder 2
29. **Allround schilder**
30. Specialist schilder/ restauratieschilder
31. Materiaalbeheerder
32. **Calculator**
33. Werkvoorbereider
34. Calculator/werkvoorbereider
35. Onderhoudsadviseur / RGS-Adviseur
36. Hoofd Bedrijfsbureau

FG	ADMINISTRATIE	BOUWKUNDIG	GLAS	METAAL	SCHILDERS	TECHNISCHE ONDERSTEUNING	LEIDING GEVENDEN
1		Hulpkracht Betonbewerker 1	Glaszetter 1	Medewerker metaal-conservering 1			
2	Administratief medewerker	Timmerkracht 1		Medewerker metaal-conservering 2	Schilder 1	Materiaalbeheerder	
3		Betonbewerker 2	Glaszetter 2	Constructie schilder Straler			
4	Secretaresse/ management-assistent	Timmerkracht 2/ houtreparateur	Allround glaszetter	Spuiter	Schilder 2		
5	Financieel administratief medewerker	Allround betonbewerker Allround timmerkracht	Specialist. glaszetter		Allround schilder		
6		Voorman/ teamleider	Voorman/ teamleider	Voorman/ teamleider	Specialist schilder/ restauratie-schilder Voorman/ teamleider		
7	Office manager					Calculator Werkvoorbereider Calculator / werkvoorbereider	Uitvoerder
8						Onderhouds-adviseur / RGS adviseur	
9	Hoofd administratie					Hoofd bedrijfsbureau	Project-leider
10							Bedrijfs-leider
11	Controller						

Hulpkracht
De functie Hulpkracht komt voor in alle soorten bedrijven. De Hulpkracht kan algemene ondersteuning leveren aan een vakman en volgt dan diens aanwijzingen; hij kan ook opdrachten krijgen van een voorman of uitvoerder. Nadruk in de functie ligt op fysieke ondersteunende werkzaamheden, van een eenduidig karakter en zonder vakman schappelijke eisen. U bent als Hulpkracht verantwoordelijk voor het gereedmaken van de werkomgeving en het voorbewerken van ondergronden (bijvoorbeeld om hout te plaatsen of te bewerken). U werkt volgens de instructies en werkmethoden van het bedrijf.

Relevante verantwoordelijkheden
- Ondergrondkwaliteit. Maakt oppervlakken schoon en bewerkt ze voor.
- Hulpmiddelen. Voert materialen, gereedschappen en afval aan en af. Onderhoudt gereedschappen.
- Hulpconstructies. Assisteert bij het opbouwen en afbreken van klim- en steigerwerk.
- Productiegegevens. Levert ingevulde werkbriefjes tijdig in, rekening houdend met het belang van de facturering van werkzaamheden aan klanten.

Voorman / teamleider
De functie Voorman/teamleider komt voor in alle type bedrijven (schilder-, glaszet-, metaalconserverings- en multifunctionele onderhoudsbedrijven), zowel grote als kleine. De Voorman is verantwoordelijk voor de correcte uitvoering van een werkopdracht, met behulp van toegewezen mensen en middelen. Hij wordt aangesproken op de realisatie van het werk conform de opdracht. De functiehouder verzorgt zelf de afstemming van zijn werkzaamheden met de opdrachtgever en/of de gebruiker van het pand. Hij neemt meer- en minderwerk op en informeert zijn leidinggevende daarover. Hij schakelt zelf de uitvoerder/bedrijfsleider in bij twijfels over de wijze van uitvoering van de werkopdracht. Werkopdrachten hebben een tijdshorizon van enkele weken en bevatten gedetailleerde aanwijzingen. De Voorman vertaalt de werkopdracht in werkinstructies voor de hem toegewezen medewerkers en controleert de juiste uitvoering daarvan. Hij levert het werk conform de werkopdracht intern op aan de uitvoerder/bedrijfsleider, in geval van kleine opdrachten ook direct aan de opdrachtgever. De Voorman heeft over het algemeen een vaktechnisch aandachtsgebied, maar kan ook een groep medewerkers van verschillende disciplines aansturen. Naast de organisatie/ coördinatie en de technische voorbereiding van de werkuitvoering, werkt hij zelf mee in de uitvoering als allround vakman, voor een substantieel gedeelte van zijn tijd.

U bent als Voorman verantwoordelijk voor de oplevering van (kortdurende) werkopdrachten volgens afgesproken specificaties.

Relevante verantwoordelijkheden

- Werkaanpak. Inventariseert de staat van de te behandelen objecten, constructies, gebouwen. Bepaalt de meest doelgerichte vaktechnische aanpak van het werk.
- Werkomgeving. Schat in wanneer (aanvullingen van) de voorraad materiaal en materieel benodigd zijn. Regelt aanvoer en afvoer van materialen, gereedschappen en afval. Waarborgt de handhaving van veiligheidsvoorschriften op de werkvloer.
- Werkstructuur. Bepaalt de werkvolgorde. Beoordeelt de verdeling van beschikbaar personeel over de werkonderdelen, rekening houdend met de verschillende talenten en persoonlijkheden. Vertaalt werkopdrachten in werkinstructies en handreikingen voor medewerkers.
- Vaktechnische producten. Werkt mee in de projectuitvoering op het eigen vaktechnische gebied, ervoor zorgend tegelijk het overzicht over werkzaamheden van medewerkers te bewaren.
- Voortgangsinformatie. Signaleert tijdig vertragingen en tekortkomingen, zodat er nog gelegenheid is voor bijsturing en aan opleveringsafspraken kan worden voldaan. Verwerkt productiegegevens tot informatieve rapportages.
- Productie-informatie. Verzamelt en registreert productiecijfers (manuren, materialen, meer-/minderwerk). Levert (interne) rapportages en eindkeuringsrapporten, rekening houdend met de facturering van werkzaamheden aan klanten en de interne informatiedoeleinden.
- Personeelsprestaties. Schept randvoorwaarden voor succesvol functioneren en beoordeelt de prestaties van medewerkers.

Projectleider

De functie Projectleider komt voor in grotere bedrijven (met name schilder-, metaalconservering- en multifunctionele onderhoudsbedrijven). De Projectleider is verantwoordelijk voor het volledige traject van projectdefinitie tot en met projectoplevering, voor grote projecten c.q. voor projecten die vanwege hun complexiteit of risico's een expliciete leiding nodig hebben. De functiehouder is aanspreekbaar op zowel de technische opzet van het project, de haalbaarheid van de planning en het realiteitsgehalte van het budget, als op de daadwerkelijke uitvoering (technische kwaliteit, tijdpad) en het bedrijfseconomisch resultaat. Hij is verantwoordelijk voor het uitwerken van het projectplan tot werkomschrijvingen. Offertes behoeven de goedkeuring van de bedrijfsleiding. Projecten hebben een doorlooptijd van enkele maanden tot een jaar. Projecten kunnen deel uitmaken van overkoepelende bouwprojecten, in welk geval de functiehouder optreedt als (vertegenwoordiger van de) onderaannemer in bouwvergaderingen. De Projectleider is de gesprekspartner van de klant om wensen en mogelijkheden in kaart te brengen en om te komen tot een projectdefinitie. Hij adviseert de klant zowel over nieuwbouw- of groot onderhoudsprojecten als over meerjarige technische onderhoudsscenario’s.

U bent als Projectleider verantwoordelijk voor de oplevering van een groot project of meerdere projecten gelijktijdig volgens opleveringsafspraken.

Relevante verantwoordelijkheden

- Adviezen. Signaleert kansen om aan veranderende klantwensen tegemoet te komen, met behoud van commerciële belangen. Bespreekt wensen en uitgangspunten met de opdrachtgever. Beargumenteert eigen aanbevelingen voor klanten op overtuigende wijze.
- Kwaliteit van projectresultaten. Geeft leiding aan projectteams. Zet mensen, middelen en werkmethoden op effectieve wijze in. Begeleidt projectwerkzaamheden, rekening houdend met de kennis, kunde en motivatie van medewerkers. Geeft richting aan de uitwerking van bestekken, calculaties, begrotingen, planningen en werkomschrijvingen. Neemt deel aan bouwvergaderingen. Regelt meer- en minderwerk met de opdrachtgever. Bewaakt de voortgang, kwaliteit, tijd- en kostenbesteding. Schat risico's op afwijkingen in en neemt maatregelen om deze te beheersen.
- Projectinformatie. Ordent gegevens naar relevantie voor management en andere partijen. Combineert en analyseert gegevens uit verschillende informatiebronnen. Ziet verbanden of ontwikkelingen. Vertaalt deze kennis in informatieve rapportages en onderbouwt voorstellen tot bijsturing van kengetallen of procedures. Optimaliseert werkprocessen.
- Klantrelaties. Onderhoudt contacten met (potentiële) klanten zodanig, dat klanten duurzaam met het bedrijf verbonden zijn.
- Personeelsprestaties. Schept randvoorwaarden voor succesvol functioneren en beoordeelt de prestaties van medewerkers. Ziet toe op het verloop van de werkprocessen. Geeft aanwijzingen en instructies. Stimuleert en begeleidt de ontwikkeling van medewerkers.

Uitvoerder (Executor)

De functie Uitvoerder komt voor in alle type bedrijven (schilder-, glaszet-, metaalconservering- en multifunctionele onderhoudsbedrijven). De Uitvoerder is verantwoordelijk voor de correcte uitvoering van een volledig werk (project), van een afgerond gedeelte van een groot werk dan wel van meerdere kleinere werken gelijktijdig. Hij is aanspreekbaar op de realisatie van zowel de technische kwaliteit van het werk, de doorlooptijd als de productiviteit (tijd- en kostenbesteding), zoals vastgelegd in de werkopdracht(en). De functiehouder plant en organiseert zelf de verschillende werken en stemt deze af met de opdrachtgevers en/of de gebruikers van het pand en met eventuele onderaannemers, andere aannemers of bedrijven die bij eenzelfde werk betrokken zijn. Hij schakelt zelf de projectleider of bedrijfsleider in bij twijfels over de (verdere) uitvoering van het werk. Werkopdrachten hebben een tijdshorizon van enkele weken tot maanden en omvatten een volledig afgerond werk. Werkt de werkomschrijving uit tot detailplanningen en werkinstructies voor de medewerkers en controleert de juiste uitvoering daarvan. Hij levert het werk conform de werkopdracht op aan de opdrachtgever, dan wel - in geval van onderdelen van grotere projecten - aan de projectleider of bedrijfsleider. Heeft vaak een vaktechnisch aandachtsgebied, maar de functie is ook van toepassing op een combinatie van vakgebieden. In principe neemt de leiding van de werkuitvoering zijn volledige werktijd in beslag.

Relevante verantwoordelijkheden

- Werkplanning. Bepaalt de gewenste detaillering van de uitvoeringsplannen. Stemt planningen zodanig af met betrokken partijen, dat vertraging door miscommunicatie wordt voorkomen.
- Werkomgeving. Zorgt voor de inrichting van de werkplaats. Schat in wanneer (aanvullingen van) de voorraad materiaal en materieel benodigd zijn. Regelt aanvoer en afvoer van materialen, gereedschappen en afval.
- Werkstructuur. Stelt teams samen en verdeelt de werkzaamheden. Begeleidt voormannen, rekening houdend met de zelfstandige positie en persoonlijkheden. Geeft instructies en handreikingen aan collega's. Ziet toe op de voortgang en kwaliteit van de werkuitvoering.
- Voortgangsinformatie. Signaleert tijdig vertragingen en tekortkomingen, zodat er nog gelegenheid is voor bijsturing en aan opleveringsafspraken kan worden voldaan. Gaat de oorzaak van kostenoverschrijding na. Verwerkt productiegegevens tot informatieve rapportages.
- Oplevering. Levert het werk op aan de hand van checklists en rapportages.
- Persooneelsprestaties. Schept randvoorwaarden voor succesvol functioneren en beoordeelt de prestaties van medewerkers. Ziet toe op het verloop van de werkprocessen. Geeft aanwijzingen en instructies. Stimuleert en begeleidt de ontwikkeling van medewerkers.
- Veiligheid/ARBO. Waarborgt de handhaving van procedures en voorschriften op het gebied van veiligheid en ARBO. Signaleert structurele problemen op dit vlak en rapporteert daarover aan de bedrijfsleider.

Allround schilder

De functie Allround schilder komt voor in alle typen schilder- en onderhoudsbedrijven, zowel grote als kleine. De Allround schilder werkt op basis van werkopdrachten, waarbij hij de precieze aanpak en uitvoeringswijze ter plekke zelf beoordeelt en kan aanpassen. Toezicht vindt plaats op afstand, de functiehouder schakelt de voorman of uitvoerder in bij twijfels over de te volgen werkwijze. De functiehouder verzorgt zelf de afstemming van zijn werkzaamheden met de opdrachtgever en/of de bewoner/gebruiker van het pand. Hij neemt meer- en minderwerk op en informeert zijn leidinggevende daarover. De Allround schilder kan de werkzaamheden begeleiden van één of 2 medewerkers (schilders, hulpkrachten), die voor de uitvoering van de werkopdracht aan hem zijn toegevoegd. De Allround schilder werkt aan alle soorten objecten en verricht alle voorkomende soorten schilderwerk. Daarnaast is hij inzetbaar op aanverwante werkgebieden als houtrotreparatie, glaszetten en behangen. Het gaat daarbij om werkzaamheden van een routinematig karakter, voor een beperkt gedeelte van zijn werktijd.

U bent als Allround schilder verantwoordelijk voor het opleveren van duurzaam en kwalitatief hoogwaardig schilderwerk volgens afgesproken specificaties. U werkt volgens de instructies en werkmethoden van het bedrijf.

Relevante verantwoordelijkheden

- Adviezen. Bepaalt de meest doelgerichte aanpak van het werk. Beoordeelt, in geval van een gegeven plan van aanpak, de geschiktheid van het plan van aanpak op grond van de situatie ter plekke en adviseert de leidinggevende waar nodig. Maakt afspraken over de werkuitvoering met bewoners/ gebruikers.
- Ondergrondkwaliteit. Beoordeelt de materiaalkenmerken van de ondergrond op risico's voor hechting en aantasting van de aan te brengen grond- en verflagen en signaleert mogelijke kwaliteitsproblemen.
- Grond- en hechtlagen. Maakt de te bewerken objecten geschikt voor afwerking, onder andere door het voorbehandelen van de ondergrond en het aanbrengen van grond- en hechtlagen en beoordeelt de effectiviteit en duurzaamheid van de aangebrachte lagen.
- Eindlagen. Controleert afwerksituaties aan de hand van kwaliteitsafspraken over de definitieve afwerking. Breng deklagen aan. Toetst eindresultaten en werkt deze bij zodat wordt voldaan aan opleveringsafspraken.
- Totaalservice Voert behang-, glaszet-, spuit- en stucwerk en houtrot- en betonreparaties uit. Geeft kleuradviezen. Beoordeelt de situatie ter plekke en doet suggesties om de eindkwaliteit te waarborgen.
- Werkomgeving. Voert materialen, gereedschappen en afval aan en af. Bouwt hulpconstructies op, plaatst ze en breekt ze af, rekening houdend met veiligheidsrisico's.
- Werkinstructies. Geeft instructies en handreikingen aan collega's, rekening houdend met het prestatieniveau en een passende manier van communiceren.
- Productie-informatie. Verzamelt en registreert productiecijfers (manuren, materialen, meer-/minderwerk). Levert (interne) rapportages en eindkeuringsrapporten, rekening houdend met de facturering van werkzaamheden aan klanten en de interne informatiedoeleinden

APPENDIX E. RESEARCH ETHICS

Application number 4867

Delft University of Technology
HUMAN RESEARCH ETHICS
INFORMED CONSENT TEMPLATES AND GUIDE
(English Version: January 2022)

Introduction

You are being invited to participate in a research study titled Designing a Robot to Support Professional Painters. This is a project connected with the Human-Robot Interaction Lab from TU Delft, aimed at advancing the painting industry by exploring the design of smart agents. This study is being conducted by Fleur Jansen from TU Delft in collaboration with Muzus, SUSAG, and potentially other future collaborating partners. These partners will contribute to the project but will not have access to your personal data. This study is part of a Master's research program.

The purpose of this research study is to explore the implementation of smart technologies in the painting industry to improve health, safety, and productivity for workers in the painting industry. The study may result in potential outcomes including academic publications, or products on the market. The implications of this study are likely to inform future robotic applications and could contribute to healthier work environments.

What to Expect

By participating, you agree to:

- Allow researchers to observe your interactions to understand the work context.
- Engage with a prototype to evaluate product features and interactions.
- Participate in interviews to brainstorm ideas or reflect on activities.

Privacy & Data Handling

- Data collected includes interviews and, in some cases, video/audio recordings.
- All personal data will be anonymized/pseudonymized and securely stored.
- Data will be used for academic research, publications, applications, and teaching.
- Access is restricted to the research team; data will be securely deleted after five years.
- If shared for academic purposes, no identifying details will be included.
- You may request access, corrections, or deletion of your data until April 30, 2025.

Risks & Safeguards

- There is a small risk of reputational impact in the unlikely event of a breach of confidentiality, but steps will be taken to mitigate this through anonymization and secure data storage.

Voluntary Participation & Withdrawal

- Participation is voluntary. You may skip questions or withdraw at any time without explanation.

Reimbursement

- No financial compensation, but travel expenses may be reimbursed if applicable.

For any further information or concerns, please feel free to contact the Responsible Researcher: Fleur Jansen

If you have any complaints regarding the study, you may contact the TU Delft ethics committee at HREC@tudelft.nl

PLEASE TICK THE APPROPRIATE BOXES	Yes	No
A: GENERAL AGREEMENT – RESEARCH GOALS, PARTICIPANT TASKS AND VOLUNTARY PARTICIPATION		
1. I have read and understood the study information dated _____, or it has been read to me. I have been able to ask questions about the study and my questions have been answered to my satisfaction.	☐	☐
2. I consent voluntarily to be a participant in this study and understand that I can refuse to answer questions and I can withdraw from the study at any time, without having to give a reason.	☐	☐
3. I understand that taking part in the study involves: • This will be a recorded interview with the workshop. The recording will be used only for academic purposes, and your personal information, such as your name, address, company information, etc, will not be shared, and the data will be stored anonymously. Surveys and Questionnaires may be involved • For interviews, the interviews will be interviewed separately, take notes with paper or laptop, and the audio will be recorded for future analysis. • There will be a workshop with materials provided by researchers, such as cards, craft materials, and booklets. • Audio or video recordings will be transcribed as text, and the recording will be destroyed after the current project is finished (around April 2025).	☐	☐
4. I understand that I will not receive payment for participating in the interview, but I will receive travel reimbursement if there is any travel involved.	☐	☐
5. I understand that the study will end by the 30th of April 2025.	☐	☐
B: POTENTIAL RISKS OF PARTICIPATING (INCLUDING DATA PROTECTION)		
6. I understand that taking part in the study involves the following risks. I understand that these will be mitigated by my being able to stop the interview and ask to delete recording at the any point	☐	☐
7. I understand that taking part in the study also involves collecting specific personally identifiable information (PII) about occupational role, age, and experience; and associated personally identifiable research data (PIRD) such as your view on your health, your willingness to change (your way of working), your personal views/beliefs with the potential risk of you being revealed.	☐	☐
8. I understand that some of this PIRD is considered sensitive data within GDPR legislation, specifically religion, political views, and data concerning criminal activities will/may be collected and processed, research has a Data Processing Impact Assessment (DPIA) in place	☐	☐
9. I understand that the following steps will be taken to minimize the threat of a data breach, and protect my identity in the event of such a breach: Anonymous data collection, aggregation, secure storage, no photos with visible faces will be documented at any stage.	☐	☐
10. I understand that personal information collected about me that can identify me, such as [e.g. my name or where I live], will not be shared beyond the study team.	☐	☐
11. I understand that the (identifiable) personal data I provide will be destroyed after the thesis is finished.	☐	☐
C: RESEARCH PUBLICATION, DISSEMINATION AND APPLICATION		
12. I understand that the de-identified information such as images, quotes, drawings, and writings, I provide during this research may be used for reports, academic publications, websites, or video channels related to this project. Additionally, the data could contribute to product development, policy decisions, or workplace safety improvements, especially in the context of wearable air	☐	☐

PLEASE TICK THE APPROPRIATE BOXES	Yes	No
curtain devices for painters. The information may also be shared with collaborating organizations for further research purposes.		
13. I agree that my responses, views or other input can be quoted anonymously in research outputs.	☐	☐
14. I agree that my real name can be used for quotes in research outputs.	☐	☐
D: (LONG-TERM) DATA STORAGE, ACCESS, AND REUSE		
16. I give permission for the anonymized interview transcript, survey, interview quotes, and anonymized photos that I provide to be archived in the TUDelft repository so it can be used for future research and learning.	☐	☐
17. I understand that access to this repository is open to public access.	☐	☐

Signatures

_____ _____ _____

Name of participant [printed] Signature Date

I, as researcher, have accurately read out the information sheet to the potential participant and, to the best of my ability, ensured that the participant understands what they are freely consenting.

_____ _____ _____

Researcher name [printed] Signature Date

Study contact details for further information:

Fleur Jansen:

[redacted]

HRX Checklist

I. Applicant Information

PROJECT TITLE:	**Support robot for professional painters**
Research period: *Over what period of time will this specific part of the research take place*	**Sep 2024 – April 2025**
Faculty:	**IDE**
Department:	**Human Centered Design**
Type of the research project: *(Bachelor's, Master's, DreamTeam, PhD, PostDoc, Senior Researcher, Organisational etc.)*	**Master's Thesis**
Funder of research: *(EU, NWO, TUD, other – in which case please elaborate)*	
Name of Corresponding Researcher: *(If different from the Responsible Researcher)*	**Fleur Jansen**
E-mail Corresponding Researcher: *(If different from the Responsible Researcher)*	**f.jansen-2@student.tudelft.nl**
Position of Corresponding Researcher: *(Masters, DreamTeam, PhD, PostDoc, Assistant/ Associate/ Full Professor)*	**Master Student**
Name of Responsible Researcher: ***Note:** all student work must have a named Responsible Researcher to approve, sign and submit this application*	**Jordan Boyle, Marco Rozendaal**
E-mail of Responsible Researcher: *Please ensure that an institutional email address (**no Gmail, Yahoo, etc.**) is used for all project documentation/ communications including Informed Consent materials*	**J.H.Boyle@tudelft.nl** **M.C.Rozendaal@tudelft.nl**
Position of Responsible Researcher : *(PhD, PostDoc, Associate/ Assistant/ Full Professor)*	**Assistant Professor, Associate Professor**

II. Research Overview

***NOTE:** You can find more guidance on completing this checklist here*

a) Please summarise your research very briefly (100-200 words)
What are you looking into, who is involved, how many participants there will be, how they will be recruited and what are they expected to do?

Add your text here – (please avoid jargon and abbrevations)
I aim to design a robot that enhances the safety and health of professional painters by supporting them with physically demanding tasks. I will visit the painter's job site 3 times. First, observations to get an understanding of the context and interviews to understand their expectations for the robot. The second time, I want to bring a full scale prop to test how the painters would like interact with the robot. And lastly, I want to evaluate the final concept with them. The recruitment of the painters will be done through the client company SUSAG. The visits will take around 1-2 hours, and a maximum of 5 painters will be interviewed each visit.

b) **If your application is an additional project** related to an existing approved HREC submission, please provide a brief explanation including the existing relevant HREC submission number/s.

III. Risk Assessment and Mitigation Plan

NOTE: *You can find more guidance on completing this checklist* ***here***

Please complete the following table in full for all points to which your answer is "yes". Bear in mind that the vast majority of projects involving human participants as Research Subjects also involve the collection of **Personally Identifiable Information (PII)** and/or **Personally Identifiable Research Data (PIRD)** which may pose potential risks to participants as detailed in Section G: Data Processing and Privacy below.

To ensure alighment between your risk assessment, data management and what you agree with your Research Subjects you can use the last two columns in the table below to refer to specific points in your Data Management Plan (DMP) and Informed Consent Form (ICF) – **but this is not compulsory**.

It's worth noting that **you're much more likely to need to resubmit your application if you neglect to identify potential risks**, than if you identify a potential risk and demonstrate how you will mitigate it. If necessary, the HREC will always work with you and colleagues in the Privacy Team and Data Management Services to see how, if at all possible, your research can be conducted.

			If YES please complete the Risk Assessment and Mitigation Plan columns below.		*Please provide the relevant reference #*	
ISSUE	**Yes**	**No**	**RISK ASSESSMENT – what risks could arise?** *Please ensure that you list ALL of the actual risks that could potentially arise – do not simply state whether you consider any such risks are important!*	**MITIGATION PLAN – what mitigating steps will you take?** *Please ensure that you summarise what actual mitigation measures you will take for each potential risk identified – do not simply state that you will e.g. comply with regulations.*	**DMP**	**ICF**
A: Partners and collaboration						
1. Will the research be carried out in collaboration with additional organisational partners such as: • One or more collaborating research and/or commercial organisations • Either a research, or a work experience internship provider[1] [1] *If yes, please include the graduation agreement in this application*		x				
2. Is this research dependent on a Data Transfer or Processing Agreement with a collaborating partner or third party supplier? *If yes please provide a copy of the signed DTA/DPA*		x				
3. Has this research been approved by another (external) research ethics committee (e.g.: HREC and/or MREC/METC)? *If yes, please provide a copy of the approval (if possible) and summarise any key points in your Risk Management section below*		x				
B: Location						

			If YES please complete the Risk Assessment and Mitigation Plan columns below.		*Please provide the relevant reference #*	
ISSUE	**Yes**	**No**	**RISK ASSESSMENT – what risks could arise?** *Please ensure that you list ALL of the actual risks that could potentially arise – do not simply state whether you consider any such risks are important!*	**MITIGATION PLAN – what mitigating steps will you take?** *Please ensure that you summarise what actual mitigation measures you will take for each potential risk identified – do not simply state that you will e.g. comply with regulations.*	**DMP**	**ICF**
4. Will the research take place in a country or countries, other than the Netherlands, within the EU?		x				
5. Will the research take place in a country or countries outside the EU?		x				
6. Will the research take place in a place/region or of higher risk – including known dangerous locations (in any country) or locations with non-democratic regimes?		x				
C: Participants						
7. Will the study involve participants who **may** be vulnerable and possibly (legally) unable to give informed consent? (e.g., children below the legal age for giving consent, people with learning difficulties, people living in care or nursing homes,).		x				
8. Will the study involve participants who **may** be vulnerable under specific circumstances and in specific contexts, such as victims and witnesses of violence, including domestic violence; sex workers; members of minority groups, refugees, irregular migrants or dissidents?		x				
9. Are the participants, outside the context of the research, in a dependent or subordinate position to the investigator (such as own children, own students or employees of either TU Delft and/or a collaborating partner organisation)? *It is essential that you safeguard against possible adverse consequences of this situation (such as allowing a student's failure to participate to your satisfaction to affect your evaluation of their coursework).*		x				
10. Is there a high possibility of re-identification for your participants? (e.g., do they have a very specialist job of which there are only a small number in a given country, are they members of a small community, or employees from a partner company collaborating in the research? Or are they one of only a handful of (expert) participants in the study?		x				
D: Recruiting Participants						
11. Will your participants be recruited through your own, professional, channels such as conference attendance lists, or through specific network/s such as self-help groups	x		**Initial contact with the users is made through the client (SUSAG). A risk is being dependent on the client for making this initial contact. If the client will not arrange contact with the users in time, participants will be recruited through my own channels.**	**It will be made clear to the participant that will be recruited that the participation will be voluntary. It will be confirmed again at the beginning of the research.**		
12. Will the participants be recruited or accessed in the longer term by a (legal or customary) gatekeeper? (e.g., an adult professional working with children; a		x				

			If YES please complete the Risk Assessment and Mitigation Plan columns below.		*Please provide the relevant reference #*	
ISSUE	**Yes**	**No**	**RISK ASSESSMENT – what risks could arise?** *Please ensure that you list ALL of the actual risks that could potentially arise – do not simply state whether you consider any such risks are important!*	**MITIGATION PLAN – what mitigating steps will you take?** *Please ensure that you summarise what actual mitigation measures you will take for each potential risk identified – do not simply state that you will e.g. comply with regulations.*	**DMP**	**ICF**
community leader or family member who has this customary role – within or outside the EU; the data producer of a long-term cohort study)						
13. Will you be recruiting your participants through a crowd-sourcing service and/or involve a third party data-gathering service, such as a survey platform?		x				
14. Will you be offering any financial, or other, remuneration to participants, and might this induce or bias participation?		x				
E: Subject Matter *Research related to medical questions/health may require special attention. See also the website of the CCMO before contacting the HREC.*						
15. Will your research involve any of the following: • Medical research and/or clinical trials • Invasive sampling and/or medical imaging • Medical and *In Vitro Diagnostic Medical* Devices Research		x				
16. Will drugs, placebos, or other substances (e.g., drinks, foods, food or drink constituents, dietary supplements) be administered to the study participants? *If yes see here to determine whether medical ethical approval is required*		x				
17. Will blood or tissue samples be obtained from participants? *If yes see here to determine whether medical ethical approval is required*		x				
18. Does the study risk causing psychological stress or anxiety beyond that normally encountered by the participants in their life outside research?		x				
19. Will the study involve discussion of personal sensitive data which could put participants at increased legal, financial, reputational, security or other risk? (e.g., financial data, location data, data relating to children or other vulnerable groups) *Definitions of sensitive personal data, and special cases are provided on the TUD Privacy Team website.*		x				
20. Will the study involve disclosing commercially or professionally sensitive, or confidential information? (e.g., relating to decision-making processes or business strategies which might, for example, be of interest to competitors)		x				
21. Has your study been identified by the TU Delft Privacy Team as requiring a Data Processing Impact Assessment (DPIA)? *If yes please attach the advice/ approval from the Privacy Team to this application*		x				
22. Does your research investigate causes or areas of conflict?		x				

			If YES please complete the Risk Assessment and Mitigation Plan columns below.		*Please provide the relevant reference #*	
ISSUE	**Yes**	**No**	**RISK ASSESSMENT – what risks could arise?** *Please ensure that you list ALL of the actual risks that could potentially arise – do not simply state whether you consider any such risks are important!*	**MITIGATION PLAN – what mitigating steps will you take?** *Please ensure that you summarise what actual mitigation measures you will take for each potential risk identified – do not simply state that you will e.g. comply with regulations.*	**DMP**	**ICF**
If yes please confirm that your fieldwork has been discussed with the appropriate safety/security advisors and approved by your Department/Faculty.						
23. Does your research involve observing illegal activities or data processed or provided by authorities responsible for preventing, investigating, detecting or prosecuting criminal offences *If so please confirm that your work has been discussed with the appropriate legal advisors and approved by your Department/Faculty.*		x				
F: Research Methods						
24. Will it be necessary for participants to take part in the study without their knowledge and consent at the time? (e.g., covert observation of people in non-public places).		x				
25. Will the study involve actively deceiving the participants? (For example, will participants be deliberately falsely informed, will information be withheld from them or will they be misled in such a way that they are likely to object or show unease when debriefed about the study).		x				
26. Is pain or more than mild discomfort likely to result from the study? And/or could your research activity cause an accident involving (non-) participants?	x		**A 1:1 scale prop will be made to research the desired human-robot interaction and to evaluate concepts with the participants. As I am researching what kind of interactions is preferred, the user might do something that could be harmful to them.** **Besides that, the researcher will visit a construction job site. There could be a risk of the researcher visiting the context.**	**Prior to the interaction with the prototype, participants will receive a safety briefing. The researcher will closely monitor the entire interaction to ensure the participants' well-being and prevent any potential harm. When there is even a slight risk of injury, the experiment will be stopped.** **The researcher will follow all safety rules and guidelines and will not wander off alone without supervision.**		
27. Will the experiment involve the use of devices that are not 'CE' certified? *Only, if 'yes': continue with the following questions:*	x					
• Was the device built in-house?	x					
• Was it inspected by a safety expert at TU Delft? *If yes, please provide a signed **device report***	x		Currently, the prototype has not been built yet, so is hasn't been inspected yet.	Once the prototype is built, it will be inspected by safety expert Martin Havranek from ID StudioLab before deployment.		
• If it was not built in-house and not CE-certified, was it inspected by some other, qualified authority in safety and approved? *If yes, please provide records of the inspection*						

			If YES please complete the Risk Assessment and Mitigation Plan columns below.		*Please provide the relevant reference #*	
ISSUE	**Yes**	**No**	**RISK ASSESSMENT – what risks could arise?** *Please ensure that you list ALL of the actual risks that could potentially arise – do not simply state whether you consider any such risks are important!*	**MITIGATION PLAN – what mitigating steps will you take?** *Please ensure that you summarise what actual mitigation measures you will take for each potential risk identified – do not simply state that you will e.g. comply with regulations.*	**DMP**	**ICF**
28. Will your research involve face-to-face encounters with your participants and if so how will you assess and address Covid considerations?	x		**The research will involve observing painters within context, interviewing painters and letting them interact with a prototype. Covid could be a potential risk.**	**If there is another COVID outbreak, the government regulations will be followed. Observations and interviews will be done at a distance. The prototype will be disinfected after each participant. In case the workers are forbidden to come to the job site, an online meeting will be arranged.**		
29. Will your research involve **either:** a) "big data", combined datasets, new data-gathering or new data-merging techniques which might lead to re-identification of your participants **and/or** b) artificial intelligence or algorithm training where, for example biased datasets could lead to biased outcomes?		x				
G: Data Processing and Privacy						
30. Will the research involve collecting, processing and/or storing any directly identifiable PII (Personally Identifiable Information) including name or email address that will be used for administrative purposes only? (eg: obtaining Informed Consent or disbursing remuneration)	x		**Through the client company, I will get in contact with painters. At the first meeting, the contacts name, phone number and email will be saved to make an appointment for future visits.**	**During the project, the contact details will be saved locally on my computer secured with a password. After the project, the contacts of the painters will be passed on to my supervisors, where it will be stored in a secure environment Surfspot.**		
31. Will the research involve collecting, processing and/or storing any directly or indirectly identifiable PIRD (Personally Identifiable Research Data) including videos, pictures, IP address, gender, age etc and **what other Personal Research Data** (including personal or professional views) will you be collecting?	x		During the observations, pictures and videos may be captured to analyse human-robot interaction. Information about participants' role, gender, age, and years of painting experience will also be collected to examine whether preferences vary based on age group, experience level, or gender. Audio recordings can be made during the interviews for analysing data.	All personal data, except for role, gender, age, and years of experience, will be anonymised after the interviews. I will ensure that no information can be traced back to individual participants or impact their professional careers through pseudonymisation. Participants in photos will be made unrecognisable. Informed consent forms will be used to obtain permission for taking photos, videos, and audio recordings, as well as for the use of their personal information, including gender, age, experience, and role. The audio recordings and videos will not be publicly shared, unless the participants have explicitly given consent to do so. During the project, the data will be saved locally on my computer secured with a password. After the project, it will be passed on to my supervisors, where the data will be stored anonymized in a secure environment Surfspot. After 10 years, the data will be destroyed.		

			If YES please complete the Risk Assessment and Mitigation Plan columns below.		*Please provide the relevant reference #*	
ISSUE	**Yes**	**No**	**RISK ASSESSMENT – what risks could arise?** *Please ensure that you list ALL of the actual risks that could potentially arise – do not simply state whether you consider any such risks are important!*	**MITIGATION PLAN – what mitigating steps will you take?** *Please ensure that you summarise what actual mitigation measures you will take for each potential risk identified – do not simply state that you will e.g. comply with regulations.*	**DMP**	**ICF**
32. Will this research involve collecting data from the internet, social media and/or publicly available datasets which have been originally contributed by human participants	x		**There will be literature research about the challenges in the painting context, about robots and robot-human interaction.**	**The literature that is used will be referenced without violating copyrights**		
33. Will your research findings be published in one or more forms in the public domain, as e.g., Masters thesis, journal publication, conference presentation or wider public dissemination?	x		The research will be published as a Master's thesis and will be presented in the final presentation for my supervisors, friends and family.	Quotes of the painters that will be used for the thesis and presentation will not be connected with their name. The pictures of painters that are used will be anonymised. For the presentation, only videos will be used if the painter has given explicit consent to do so, and the video will be sent to the painter beforehand to ask permission once more. In the videos, no personal information about the painter will be shared. The videos are mainly for showcasing the interaction with the robot.		
34. Will your research data be archived for re-use and/or teaching in an open, private or semi-open archive?		x				

H: More on Informed Consent and Data Management

NOTE: You can find guidance and templates for preparing your Informed Consent materials) here

Your research involves human participants as Research Subjects if you are recruiting them or actively involving or influencing, manipulating or directing them in any way in your research activities. This means you must seek informed consent and agree/ implement appropriate safeguards regardless of whether you are collecting any PIRD.

Where you are also collecting PIRD, and using Informed Consent as the legal basis for your research, you need to also make sure that your IC materials are clear on any related risks and the mitigating measures you will take – including through responsible data management.

Got a comment on this checklist or the HREC process? You can leave your comments here

IV. Signature/s

Please note that by signing this checklist list as the sole, or Responsible, researcher you are providing approval of the completeness and quality of the submission, as well as confirming alignment between GDPR, Data Management and Informed Consent requirements.

Name of Corresponding Researcher (if different from the Responsible Researcher) (print)

Fleur Jansen

Signature of Corresponding Researcher: 

Date: 28-10-2024

Name of Responsible Researcher (print) Jordan Boyle

Signature (or upload consent by mail) Responsible Researcher: 

Date: 4/11/2024

V. Completing your HREC application

Please use the following list to check that you have provided all relevant documentation

Required:

- **Always:** This completed HREC checklist
- **Always:** A data management plan (reviewed, where necessary, by a data-steward)
- **Usually:** A complete Informed Consent form (including Participant Information) and/or Opening Statement (for online consent)

Data management plan

Plan Overview

A Data Management Plan created using DMPonline

Title: Support robot for professional painters

Creator: Fleur Jansen

Project Administrator: Jordan Boyle

Affiliation: Delft University of Technology

Template: TU Delft Data Management Plan template (2021)

Project abstract:

Professional painting is a physically demanding job where most painters don't work until retirement age because of their sustained injuries. Implementing robots can greatly enhance the health and safety of professional painters by making their work easier, lighter and healthier, thus reducing the risk of injury and extending their careers. Additionally, robots can support rather than replace human painters, preserving craftsmanship while using technological advancements to improve working conditions, safety and efficiency.

I aim to design a robot that enhances the safety and health of professional painters by supporting them with physically demanding tasks. During this project, I will design the desired functionalities of the robot, the desired human-robot interaction and the desired look and feel of the robot.

ID: 160714

Start date: 03-09-2024

End date: 09-04-2025

Last modified: 10-02-2025

Support robot for professional painters

0. Administrative questions

1. Name of data management support staff consulted during the preparation of this plan.

Jeff Love

2. Date of consultation with support staff.

2025-01-06

I. Data description and collection or re-use of existing data

3. Provide a general description of the type of data you will be working with, including any re-used data:

Type of data	File format(s)	How will data be collected (for re-used data: source and terms of use)?	Purpose of processing	Storage location	Who will have access to the data
Pictures	.HEIC, .jpg	Capturing the context, the issues that arise in the workplace, and observations of painters interacting with the prototype.	Photos will be used to provide contextual insights and illustrate challenges within the environment. They will also capture interactions between the prototype and users to inform the design of the next iteration of the robot. All photos will be taken to ensure that faces are not visible. If a face is unintentionally captured, it will be blurred to maintain anonymity. Any images included in reports to illustrate interactions will have all identifiable features anonymised.	Onedrive	Only the project team
Videos	.mov	Observations of painters interacting with the prototype	To analyse human-robot interaction.	Onedrive	Only the project team
Audio recordings	.mp3	Recordings of interviews with painters	To understand and describe the needs and desires of painters. From the audio recordings, quotes can be derived that can be used to strengthen research conclusions. It will be used only for transcription and deleted after anonymised analysis.	Onedrive	Only the project team

4. How much data storage will you require during the project lifetime?

- < 250 GB

II. Documentation and data quality

5. What documentation will accompany data?

- README file or other documentation explaining how data is organised
- Methodology of data collection

My graduation thesis will include the methodology for collecting my data.

III. Storage and backup during research process

6. Where will the data (and code, if applicable) be stored and backed-up during the project lifetime?

- OneDrive

I will use the OneDrive cloud storage provided by TU Delft.

IV. Legal and ethical requirements, codes of conduct

7. Does your research involve human subjects or 3rd party datasets collected from human participants?

- Yes

8A. Will you work with personal data? (information about an identified or identifiable natural person)

If you are not sure which option to select, first ask your Faculty Data Steward for advice. You can also check with the privacy website . If you would like to contact the privacy team: privacy-tud@tudelft.nl, please bring your DMP.

- Yes

The data will be anonymised for publication of the research. If any information that could identify a participant appears in the raw data, it will not be shared in the research and will be deleted at the end of the project.

8B. Will you work with any other types of confidential or classified data or code as listed below? (tick all that apply)

If you are not sure which option to select, ask your Faculty Data Steward for advice.

- No, I will not work with any confidential or classified data/code

9. How will ownership of the data and intellectual property rights to the data be managed?

For projects involving commercially-sensitive research or research involving third parties, seek advice of your Faculty Contract Manager when answering this question. If this is not the case, you can use the example below.

The collected data and the results will be co-owned by myself, the client SUSAG, my supervisors Jordan Boyle and Marco Rozendaal and possibly a new graduation student who will continue my work.

10. Which personal data will you process? Tick all that apply

- Data collected in Informed Consent form (names and email addresses)
- Signed consent forms
- Photographs, video materials, performance appraisals or student results
- Gender, date of birth and/or age
- Email addresses and/or other addresses for digital communication
- Telephone numbers

I'm collecting contact details and audio recordings for interviews and user tests and I collect photos during co-creation sessions.

11. Please list the categories of data subjects

Professional painters

12. Will you be sharing personal data with individuals/organisations outside of the EEA (European Economic Area)?

- No

15. What is the legal ground for personal data processing?

- Informed consent

16. Please describe the informed consent procedure you will follow:

All participants will be asked to sign an adapted form of the consent form provided by the TU Delft.

17. Where will you store the signed consent forms?

- Other - please explain below
- Same storage solutions as explained in question 6

The informed consent forms will be scanned and saved on the OneDrive cloud storage provided by TU Delft. The physical files will be stored in a locker at the IDE faculty of the TU Delft.

18. Does the processing of the personal data result in a high risk to the data subjects?

If the processing of the personal data results in a high risk to the data subjects, it is required to perform a Data Protection Impact Assessment (DPIA). In order to determine if there is a high risk for the data subjects, please check if any of the options below that are applicable to the processing of the personal data during your research (check all that apply).
If two or more of the options listed below apply, you will have to complete the DPIA. Please get in touch with the privacy team: privacy-tud@tudelft.nl to receive support with DPIA.
If only one of the options listed below applies, your project might need a DPIA. Please get in touch with the privacy team: privacy-tud@tudelft.nl to get advice as to whether DPIA is necessary.
If you have any additional comments, please add them in the box below.

- None of the above applies

22. What will happen with personal research data after the end of the research project?

- Personal research data will be destroyed after the end of the research project

V. Data sharing and long-term preservation

27. Apart from personal data mentioned in question 22, will any other data be publicly shared?

- All other non-personal data (and code) produced in the project

In the thesis, the following data will be shared:

- Interview insights about challenges in the different painting contexts
- Results and insights of co-creation sessions with students and painters
- User study insights about the desired interaction between a painter and the robot
- Reflection of the performed methods

29. How will you share research data (and code), including the one mentioned in question 22?

- My data will be shared in a different way - please explain below

My data will be shared as part of my graduation report in the TUD education repository. Anonymised pictures and quotes might appear in the report, as well as anonymised pictures, quotes and videos in the presentation. The images published in the report are essential for explaining the experimental setup, allowing other designers to learn from the used methodology and build upon it. Additionally, the pictures are necessary to showcase the desired interaction that came out of the user study to argue the design decisions of the final design.

Participants will remain unidentifiable, as all faces will be blurred and any other identifiable data will be anonymised.

30. How much of your data will be shared in a research data repository?

- < 100 GB

31. When will the data (or code) be shared?

- At the end of the research project

32. Under what licence will be the data/code released?

- CC BY

VI. Data management responsibilities and resources

33. Is TU Delft the lead institution for this project?

- Yes, the only institution involved

34. If you leave TU Delft (or are unavailable), who is going to be responsible for the data resulting from this project?

When I leave the TU Delft, my chair Jordan Boyle is reponsible for the data.J.H.Boyle@tudelft.nl

35. What resources (for example financial and time) will be dedicated to data management and ensuring that data will be FAIR (Findable, Accessible, Interoperable, Re-usable)?

None - I will handle all data management on my own using resources provided by the university.

Device report

Delft University of Technology
INSPECTION REPORT FOR DEVICES TO BE USED IN CONNECTION WITH HUMAN SUBJECT RESEARCH

This report should be completed for every experimental device that is to be used in interaction with humans and that is not CE certified or used in a setting where the CE certification no longer applies[1].

The first part of the report has to be completed by the researcher and/or a responsible technician.

Then, the safety officer (Heath, Security and Environment advisor) of the faculty responsible for the device has to inspect the device and fill in the second part of this form. An actual list of safety-officers is provided on this webpage.

Note that in addition to this, all experiments that involve human subjects have to be approved by the Human Research Ethics Committee of TU Delft. Information on ethics topics, including the application process, is provided on the HREC website.

Device identification (name, location): Robot assistant for professional painters

Configurations inspected[2]:

Type of experiment to be carried out on the device:[3] User study

Name(s) of applicants(s): Fleur Jansen

Job title(s) of applicants(s): Master student

(Please note that the inspection report should be filled in by a TU Delft employee. In case of a BSc/MSc thesis project, the responsible supervisor has to fill in and sign the inspection report.)

Date: 10-02-2025

Signature(s):



1 Modified, altered, used for a purpose not reasonably foreseen in the CE certification

2 If the devices can be used in multiple configurations, otherwise insert NA

3 e.g. driving, flying, VR navigation, physical exercise, ...

1

Setup summary



Figure 1. Prototype of robot assistant with lifting mechanism

The robot assistant prototype is made of poplar wood, painted with grey lacquer paint. The wood prototype is connected with four aluminium rods to a robot base. This base is an existing product 'Dalco Drive' made by Dalco Robotics (Figure 2). The robot is capable of autonomous driving, but to keep more control over the robot, it is controlled by a controller.

The prototype has electronics to control a lift mechanism of four linear actuators and LED strip. The electronics (Figure 3) are attached to the bottom of the prototype, fixed with screws and cable organisers. The back of the prototype can be removed to charge (under supervision) the battery that controls the electronics. In case of light rain, an umbrella is held above the prototype to protect the exposed electronics (buttons). In case of heavy rain, the user study is postponed until the weather allows it.

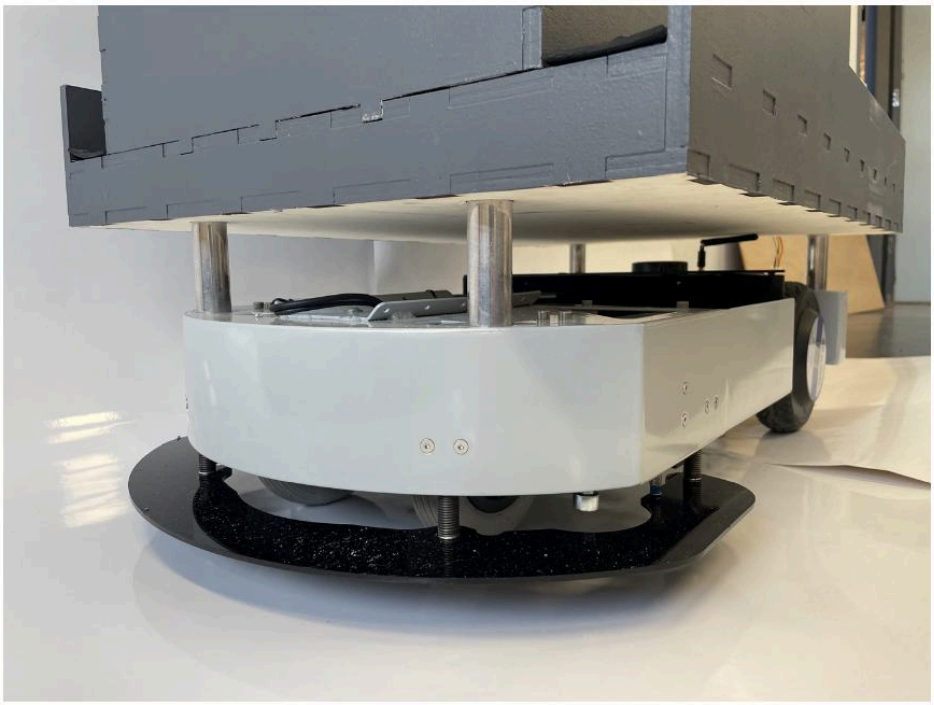

Figure 2. Connection prototype and Dalco Drive by Dalco Robotics

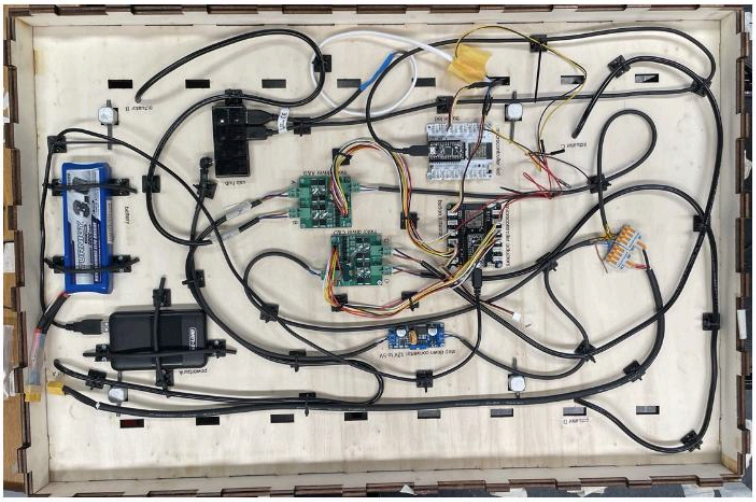

Figure 3. Electronics system

Risk checklist

Please fill in the following checklist and consider these hazards that are typically present in many research setups. If a hazard is present, please describe how it is dealt with.

Also, mention any other hazards that are present.

Hazard type	Present	Hazard source	Mitigation measures
Mechanical (sharp edges, moving equipment, etc.)	x	Up and down movement of the linear actuators	Safety briefing before the user study, the researchers and participants wear personal protective equipment
Electrical	x	Electronics system	When the prototype is in use and the electronics are turned on, it will be in constant supervision. The battery can be quickly removed from the system. When the prototype is not in use, the electronics system is disconnected from the battery. Most of the electronics are covered from the rain by the prototype. In case of heavy rain, the user study will be postponed. In case of light rain, the exposed electronics will be protected with an umbrella or plastic bag.
Structural failure			
Touch Temperature			
Electromagnetic radiation			
Ionizing radiation			
(Near-)optical radiation (lasers, IR-, UV-, bright visible light sources)			
Noise exposure			
Materials (flammability, offgassing, etc.)			
Chemical processes			
Fall risk	x	Robot base	Avoid driving near edges the robot could drive off. If it does come across a potential area where it could fall, the robot will be lifted from the robot base and will not be driven near that edge.
Other:			
Other:			

Device inspection

(to be filled in by the AMA advisor of the corresponding faculty)

Name: [redacted]

Faculty: IDE

The device and its surroundings described above have been inspected. During this inspection I could not detect any extraordinary risks.

(Briefly describe what components have been inspected and to what extent (i.e. visually, mechanical testing, measurements for electrical safety etc.)

The prototype has been inspected and all the possible hazards (moving parts, construction and electrical systems) have been checked and deemed safe and suitable for user testing.

Date: 10-02-2025

Signature:



Inspection valid until[4]: 10-02-2026

Note: changes to the device or set-up, or use of the device for an experiment type that it was not inspected for require a renewed inspection

4 Indicate validity of the inspection, with a maximum of 3 years

APPENDIX F. INSIGHTS MUZUS

Insights gathered from interview with Muzus

Scaffolding isn't adjusted to the wishes of the painter. When the painter comes to the job site, the scaffolding is already set up. This causes them to go into uncomfortable positions.

Roles and responsibilities
Roles more based on experience. The craft of painting is taught from one person to another.

Interns and juniors
- Juniors - just finished education and started working there
- Still taught things in practice

Painters
- Not juniors anymore

Foreman/senior painters
- Administrative work
- Keep everyone in check
- One per project
- Multiple at the same time
- More like senior painters
- Responsible for making inventory list
- How many people were there?
- Senior painters or the foreman do play a role with the planning. Helping deciding when they will (not) be working.

Instructor (it can be the foreman painter, but it doesn't necessarily have to be)
- Is in more contact with interns and juniors
- Lifting correctly

Project leader
- More the administrative side
- Runs multiple projects at the same time
- Cares about the health and safety part
- Integrate healthy and safety measures
- Puts in in practice
- Is not always around
- For the bigger companies they have one central project leader

Quality control mainly done by company. Project leaders.

Communication and sound
During the painting process they don't talk a lot, only at teaching moments. Call for help. Talk and decide what to do with it.

Outside, it's not that noisy. Not allowed to have earbuds for music.
Inside it is very noisy.

Common contexts & weather influence
Dependent on what kind of company it is. Depends on size of the company. Big companies usually do the outside. KLOET: focusses on outside jobs.

Contextual factor: if the weather is nice, they do outside work. If it rains, they have an inside job to go to. Prioritize outside jobs.

Practice in knowing when it will rain. They can tell.
Buienradar is main way of finding it out. Light rain plastic covering around the scaffolding. They can't do it when it's too hot. Lot of factors that they personally cannot predict. Trouble shooting on the spot.

Issue with planning
Company makes a planning, but impossible for the painters to finish the task within that time frame because of unforeseen circumstances. There are often issues with the planning.

Who's responsible?

Materials at the jobsite
For bigger jobs, the painters can leave their equipment in containers.
Sometimes they have to load and unload every day. Really depends on the job.

Foreman makes an inventory list. Sometimes the painters don't have to bring their materials, and the materials and tools are already at the job site. Not sure who does this (?). But there are also issues with this as if things are missing, they cannot use it.

Behavioral change is necessary
It is also important that the robot will be brought to the job site.
Important to specify in which contexts the robot can be used and for what kind of tasks it can be used. Prove that it makes sense for multiple contexts. Also mention limitations.

Craftsmanship and regulations
Everything really depends on the context. Values, innovativeness, craftsmanship, etc. The craftsmanship is also related to following the safety regulations.

In theory, painters must wear:
- Gloves
- Hearing aid (ear plugs or headphones)
- Mouth and nose cover
- Knee pads
- Goggles? Outside this is not necessary

In reality, we see few people wear it. The older generation protects the young by scolding them if they don't wear safety equipment. But sometimes they don't wear the safety equipment themselves because "This is how I learned it".

Hated tasks
Depends on the values of each painter. Some loved sanding.
But in general, everyone hates taping off edges. Takes a long time and uncomfortable postures.

Structure
They work in groups, rarely alone. Often 2 or 3 people per task assigned. This is also because of safety regulations. They are sometimes alone during lunch.

Tips for visiting job site
Make sure that you reassure the painters that the robot will not take over their job, it will make it easier and more fun. The painters might find it hard to imagine a future different from now. A risk that they will hate on your product. Reassurance that they will keep doing there job will help.

Ask them about their craft. They will see that you're interested and respect the craft.

Tips for co-creation tool
Introduce it not as a robot. Separate function rather than it is part of a product. Build up to the smart object (robot).

First question: If you would need some help, what kind of help would be useful for you? Rate it in categories Love, Like, Unnecessary, Hate.

Now introduce the robot. Pick the functionalities for the robot from the categories.

Start with something basic. Simplify it. Build it up slowly. Helps you to root it into the practice.

Why don't they use current solutions? Because they believe it's not going to work and it will replace you. Make sure that they understand they are not being replaced but enhanced.

APPENDIX G. INTERVIEW STRUCTURE CONTEXTUAL ANALYSIS

1. General Background

- How long have you been working in this profession?
- What kind of tasks do you typically carry out?
- What types of work environments or contexts do you usually encounter in your field?
- Which context do you encounter most often?
- Which context do you find particularly difficult or challenging to work in?

2. Team Structure

- Do you usually work alone or with others?
- What does the team structure look like? Who do you typically work with (e.g. foreman, project manager)?
- Are you responsible for bringing your own materials to the worksite? If not, who is, and how is that organised?
- Who is responsible for planning your work?

3. Job Content

- What do you enjoy most about your job?
- What parts of your job do you find physically demanding?
- Is there a big difference between working indoors and outdoors?
- Are there aspects of your job you find frustrating or unenjoyable? (This could include specific tasks or how things are currently organised.)
- Which tasks do you enjoy the most?
- If you could change something about your work, what would it be?
- Apart from protective clothing, are there any other tools or aids available to support your work? Do you use them? Why or why not?

4. Activity & Robot Collaboration

- Imagine you could get assistance at the press of a button—what kind of help would be useful to you? And what kind of help would be unnecessary? (Use the robot functionality cards and ask participants to categorise them into: Love, Like, Unnecessary, Hate)

Now imagine this:
You have a small robot cart that doesn't paint, but supports you by making certain parts of your work easier or more enjoyable.

- Would you be open to collaborating with such a robot?
- What concerns would you have about working with a robot?
- What kind of support would you expect the robot to provide? (Start with an open question.)
- Are there certain requirements the robot would need to meet in order for you to want to work with it?
- Using the categorised cards (Love, Like, Unnecessary, Hate), describe what your ideal robot would be able to do. If anything is missing, feel free to use the blank cards to add new features.
- What kind of tasks would you not trust a robot to do?
- In what way would you like to collaborate with the robot?

APPENDIX H. CONCEPT EVALUATION STRUCTURE

5 min - Introduction

- Briefly explain the aim of the interview:
  - To gather feedback on several proposed solutions. What appeals to you? What concerns do you have? What questions do the concepts raise?
  - To better understand your responsibilities, what you enjoy about your job, and the challenges you face in your work environment.
- Mention that all the concepts will first be briefly introduced, and afterwards they will be discussed one by one.

5–10 min – Completion of Consent Forms

- Explain and fill in the consent forms.

25 min (5 min per person) – General Group Interview Questions

- What is your role?
- What are your main responsibilities?
- Who do you interact with in your work?
- What do you enjoy about your job?
- Are there any tasks you find physically or mentally demanding?

10 min – Concept Pitches (1 minute per concept)

- Present all the concepts briefly.
- 60 min (10 min per concept) – In-Depth Discussion of Each Concept
- Show AI-generated images of the concepts as you go through them.
- Ask questions:
  - What do you like about this concept?
  - What makes you doubtful or sceptical?
  - What questions does this concept raise?

10 min – Concept Evaluation

- Ask participants to rate all the concepts.
- You can give them a limited number of stickers to allocate to their preferred concepts.

5 min - Final reflection

- Is there one concept that stands out as your favourite?

APPENDIX I. TRANSCRIPT RESIDENTIAL CONTEXT COMPANY A

Interview with older painter from painting company A (working on residential and commercial properties) about the painting profession and the challenges, and the possible role of a robot in the workspace.

1. Introduction of the painter and the profession

How long have you been doing this job?
Exactly 38 years.

What does your job involve?
I've been a painter that whole time. Never had another job. Followed in my dad's footsteps – he was also a painter at the same company. I'm an all-round painter.

Did your father teach you the trade?
Well, back then you had a mentor – you don't anymore. There's just no time or budget for it these days.

Because mentoring is one-on-one?
Exactly. Back then you had a proper mentor – one-on-one training. I used to go with my dad and learn how to sand and prime. That was actually better, but now there's no time or money for that anymore.

So do trainees now do more of an internship and get support from another painter?
Yes, they just join the team on site.

Is anyone responsible for them?
The team leader. In the past, a consultant would visit with a checklist – "Have you done this? That?" You had to complete it all. Now they just throw them in at the deep end. They're expected to do everything, know everything.

Because they've already had training beforehand?
Yes. I only did evening classes for theory – five years – and earned my apprentice and journeyman qualifications. But you learn most of it on the job. Theory and practice aren't the same. At school everything's clean and dry, there's no glass in the frames. Out in the real world you deal with all sorts. This morning it was wet, so I had to dry everything first. You don't get that at school.

What kind of unexpected things do you come across that you need to solve?
The weather has the biggest impact. Sometimes you run into wood rot – you either sort it yourself or get a carpenter in, depending on how big the job is. Eventually you learn what products to use on what. Every surface needs its own primer and different topcoat. You only learn that through experience.

Do you mostly work outside or also indoors?
98% outside. Not how it used to be – for the first 20 years, in winter you worked indoors: offices, schools. But that's no longer the case. Now you're outside year-round, and the products have been adjusted for that. I use four-season paint now – it works down to minus six. You're dealing more with moisture these days than with cold.

Is outdoor work common, or does it depend on the company?
Depends on the company. We don't have much indoor work. And like the inside of offices or schools – that hardly ever gets done anymore. Take this school – they've got volunteers doing the painting. It's all about money. I mostly paint council houses – rental homes. Those are commissioned by the local authority. Next year I'll be doing 500 homes in [village] – I'll be busy all summer. I've already painted those homes four times in my career. Every five or six years they get repainted.

So mostly rental homes?
Yes, mainly rentals. Occasionally private, but that's rare because people just can't afford it.

How do you get your jobs?
Through my boss, the project manager. He gives me the job, then I go out and check what I need. If I've got it myself, great – otherwise I order it. I rarely see the manager after that. I just get on with my hours.

So you don't have much contact with him?
He basically trusts me. I do all the handovers with the inspector myself. In the past the boss would come out – he doesn't anymore. I know what I'm doing. I go with the client, they approve it, and that's it.
[Manager's name] mainly handles sales and getting work in. He doesn't have time to visit sites. Sometimes he pops in for a chat and then leaves again.

How do you stay in contact with the client?
[Manager] tells me what needs doing. If I think something extra might need doing, I call the client. [Manager] does the site visit and the calculator draws up the quote. I've got the practical experience – they don't see certain details. They take a general look, but they miss things.

Are there types of projects you find more enjoyable or more difficult?
With rentals, you deal with tenants – and some can be difficult. “How long will it take? How long will the scaffolding be up?” They complain via email and not directly to me. It goes through the council, then an inspector comes. One-on-one is easier – no one in between. Private clients are nice to work for, but since they’re paying more, they expect high quality and are harder to please.
It’s mostly dealing with people that makes the job tough. They’re supposed to give you access – that’s in the tenancy agreement.

What tasks do you often carry out?
All painting jobs involve: cleaning (degreasing), sanding, priming, painting, sealing.

Any tasks you enjoy more than others?
No, I don’t mind any of it. Some colleagues hate sanding – not me. You spend about an hour on a window, 45 minutes of that is prep. That takes the most time. I’d happily paint every day, but prep work is part of it.

Are any tasks physically harder?
Not really. You just shouldn’t paint ceilings all in one day. Let a colleague do the rolling. I don’t sand all day – I do a bit, then prime, then carry on the next day. Repetitive work gets boring. You have to plan ahead. Lots of colleagues can’t – they get stuck. If the weather turns bad, you need something else prepped and ready to go. If the weather’s good, then you paint. Once it’s painted, it’s done. Don’t wait until everything’s primed before painting – you won’t get a full week of good weather. Rarely happens.

So you keep an overview of everything that needs doing?
Yes. Some jobs can be done under cover – save those for rainy days. If it’s not pouring, you can still do something. You have to keep an eye on moisture. If the streets aren’t drying, it’s too damp. I don’t need a meter for that – I just know. When the street starts drying, it’s good to go.

What do you do if it’s too damp for too long?
Then you can’t paint. Well, you can, but it won’t be right. It won’t adhere. You don’t want that. You can prime – that’s moisture-regulating, so the damp doesn’t matter as much.

Are there days where it rains so hard you can’t work at all?
Yes – then you do nothing and sit in the hut. But those days drag. If it rains for an hour, that’s a nice extra break – but not all day. Then I get bored. If it rains later in the day, I just go home early. Won’t dry in time anyway. Next day I work a bit longer. My boss knows I get my hours in, so he doesn’t mind. I do get a set number of hours to stick to roughly.

[Manager] sets how many hours you get?
Yes, and you should try to stay within that. Otherwise, it goes over budget. You almost never get all the hours you need. I usually manage it, but the pace is high. If it runs over, it's the estimator's fault – they should've assessed it better. The window frames are all logged in a program – entered by metres – and that's how they allocate time. But if a job's hard to reach, you're ringing doorbells, walking around the back – that's all lost time. They don't factor that in. One carpenter kept rebuilding his scaffold – I just ordered a cherry picker. Wasn't in the budget – too bad. Saves my back. I don't have back problems now, but if I had to mess about with scaffolds all the time, I would. That's just wear and tear. The cherry pickers are there – electric and quick. You'll make up the time. And I work alone – I can't rebuild a scaffold by myself. Not allowed anyway. Full scaffolding is expensive. A cherry picker pays for itself.

So it prevents pain?
Yes. It lets you work at chest height. If your arm goes too high, raise the platform. Anything above shoulder height is too far. If you're always reaching, it'll cause pain – not when you're young, but after 38 years, it wears you out.

Do you still do tasks that put your arm above shoulder height?
Not with the cherry picker – just raise it. Sometimes I stretch quickly, but I shouldn't. Just raise it.
When painting ceilings, your arms are up. You can get neck braces for that. One ceiling's fine, but if you're doing it week after week, you need one to stop your neck bending backwards. They say you should roll away from yourself to avoid looking up – but in practice, you always look up. Otherwise, you can't see what you're doing. You need a good pole – not too short – otherwise you're still stretching. You hold it underhand.
Exoskeletons help too. I've worn one. I want to like it, but it doesn't make sense. It's strange. Maybe they'll get better. But they weigh 3–4 kilos – a lot for your back.
I don't wear the neck brace either. But plasterers doing lots of ceilings – they probably should. Older guys don't use them. Not sure if the younger ones will.
Now you've got all kinds of PPE. I never wear a mask, not even when sanding. It's all available – and it should be used – but we're not used to it. You see it in construction too – working with plaster without masks. If you've done that since you were 18 and get ill later, they'll say it's your fault – the protection was there. When I started, it wasn't. Solvents have been phased out too. We used to use turps – not anymore.

So you don't use it because it's what you're used to?
Yes, and I'm stubborn. When they invented rollers, I stuck with the brush. "What am I supposed to do with that?" Now I use them – the products have changed so much you almost have to. You can't spread it with a brush anymore. You put it on and leave it. Paint dries faster now. You used to be able to paint a door and adjust it later – now it's dry already.

What didn't you like about the exoskeleton?
It's unnatural. It's like someone pushing your back while you walk. It helps you lift, but it feels wrong.

If it were fully tailored to you, would you accept it?
I think we're too stubborn. Probably not. Imagine doing a house while wearing a suit of armour – it's just not right. We'd look like Robocop. Not gonna work. A neck brace though – that's useful for frequent ceiling work. It makes you take a step back. That seems reasonable.

2. Results activity with Robot Functionality Cards

Give stability on ladder
Let's say I'm on a ladder. Sometimes it'd be helpful – but really, it's not comfortable when someone holds you. You've got no control. Say you're at the edge of a roof and someone's holding you – that's a trust issue. I'd rather hold on myself. If there's something solid I can hold onto, I'm happy with that.

Give warnings for safety risks
If I don't see something and someone shouts a warning, I think that's a good thing. You might get annoyed, but it's just looking out for you.

Monitor body posture
I know how I'm standing. But if someone says, "Hey, try standing like this – it's less strain," then I think that's good advice.

Check safety of tools
That's always a good thing, of course.

Place to rest
There should always be a place to rest. It's part of the collective labour agreement (CAO). It's a legal requirement for a company to provide a space to eat and take breaks.

Mix paint
All your pigment's at the bottom of the tin, so you always need to give it a shake before using. If it's a big bucket, better to use a drill with a mixing attachment – can't really do that well with a stick. That kind of tool already exists.

Clean paintbrushes
You basically clean them as you go. The top layer often gets a bit hard – I use a Stanley knife to scrape it off and carry on. You can't really plan in advance. We used to have expensive pig-hair brushes – there were machines to clean them.

Old paint rollers were made of sheepskin and would be cleaned in machines for hours. Now it's mostly disposable stuff. The synthetic brushes from back then didn't wear out – I used one for a whole year. You can't keep using worn-out lacquer rollers, but you can still use them for priming.
Paint from before 2010 – if it dried up, you could peel it out. Now it crumbles – best to throw the paint cups away.

Masking/taping
Something that masks for you – that doesn't work. We already have masking machines – rolls with tape and paper.

Regulating paint temperature
Doesn't work. We tried something like that. Useless. It kept the paint warm, but once you go outside and the object's cold, the effect's gone. Same with heated sealant guns – outside it stiffens up straight away.

Storing tools
I throw them in a tray. I like having paint tins organised – primers with primers, topcoats with topcoats. These days all the packaging looks the same – you have to look closely.

Storing protective clothing
Goes in a locker you can lock – your own gear. I don't have one now, but I've had one before. If I feel I need it, they'll buy it for me – they're not difficult about it.

Carrying waste
I have a lot of waste. I don't have a company van. Every now and then a pick-up comes by and takes it away. It'd be good if there were something to put the waste in. On bigger projects there's sometimes a waste container – but that costs money. And you can't just throw everything in. At the depot, paint tins are pressed and go in special barrels – chemical waste – and are collected. If the paint's dry, it's classed as domestic waste. I have a tin for leftovers – sealed and taken to the chemical waste container. That costs the company money too.

Carrying ladders
You shouldn't have something placing the ladder for you. Maybe like a DIY store trolley – that could carry the ladder. Makes moving it easier. When collapsed, my ladder's about 3 metres. If it's on a trolley, you'll have to make multiple turns. If I carry it myself, I'm done quicker. Easier to carry alone. But if it's a big ladder or long distance, we carry it together.
It'd be nice if someone else did it – but I don't want to burden someone. Back in the day, once you were nearly 60, you didn't go up ladders anymore – you did low-level work instead.

Transporting tools between painters
You've usually got everything in your cart. For a lot of council work, you've got a wheeled chest – everything's in there. Tools, paint, with a lock. So you've got it all nearby and don't have to lug it around.
I always take things I no longer need back straight away. I never walk away from the worksite empty-handed. Then you don't have to clean everything up at the end.

Stair climbing
Normally not a problem – unless your hands are full.

Lifting paint buckets
That would be useful. On fixed scaffolds, there's often a materials lift – great when it's there. But again, it costs money to organise.

Mopping the floor
That would be great. There are machines for that – no way I'm mopping myself.

Manoeuvring in tight spaces
Like self-parking cars – detects space and goes there. That'd be nice.

Music/radio
No radio on site. I'm not into tech anyway. On building sites, it's usually not allowed. If the music's loud, you can't hear people shouting. You're not allowed headphones either – not safe. Too distracting. Clients often don't want it either. Can cause nuisance in the neighbourhood. I just use the radio for the weather. Music is nice – but more for after work.

Bottom line: it's got to be worthwhile.

Would you be open to working with a robot like that?
Something like a cart or chest – yes, it'd be handy if it followed you around.

Are there requirements the robot must meet for you to work with it?
It needs to be friendly. It should add value – not do unnecessary things. It has to be functional. It must really help. There's got to be a benefit.

Describe your ideal robot, using the cards you've sorted into categories:
It'd be helpful if the robot could spot rubbish and clean it up straight away. Also, if it could see paint splashes and clean those too. Bringing paint over would be great – saves me walking. The goal is to minimise what I have to do. Painting and sanding – that's our job. But the robot can help with the unnecessary stuff – like fetching something I forgot. It'd be nice if I could just say to the robot, "Go grab that," and it does.

Chosen features/cards:

- Carry ladder
- Manoeuvre in tight spaces
- Lift paint buckets
- Mop the floor
- Clean up spills or paint splashes
- Transport tools between painters
- Monitor posture
- Give warnings for safety hazards
- Check safety of tools and materials
- Mix paint
- Carry trash
- Power electronic tools

What wouldn't you trust a robot with?
Anything dangerous – I wouldn't want my safety to depend on a robot.

How would you want to work with the robot?
By voice. Not controlling it with a box or laptop. Just say "Follow me" and it follows. Voice commands. Program it with a vocabulary.

APPENDIX J. TRANSCRIPT RESIDENTIAL CONTEXT COMPANY B

Interview and concept evaluation with younger painter and project manager from painting company B (residential context).

1. Introduction painter

I'm [name], mainly working at height with painting jobs. My tasks include sanding, preparing surfaces, and applying the final coats. I often work on scaffolding and regularly in a cherry picker—actually, more often than on the ground.

Do you find any parts of the work physically demanding?
Not really, personally.
You might spend a whole day painting ceilings. That can be tough on your shoulders. If your posture isn't right, it can cause issues. But I don't often do the same movement all day, so it's manageable.

Are you free to vary your tasks if you're painting many ceilings?
Yes. That's a choice you make yourself. If I've done two or three ceilings, I might choose to tidy up or do something else for a bit—break up the painting for fifteen minutes. You try to keep some variety in the work.

Besides physical strain, are there any other challenges in your work?
Not really, for me, because I'm used to it. But I can imagine the repetition being mentally tiring for some people. If you have to paint a hundred identical windows, it can feel endless and all the same. Personally, I don't mind that kind of work, but I can see why others might find it dull.

What do you enjoy about your work?
I like that it's physically varied. Even if I'm painting lots of the same windows, I'm still sanding, caulking, and doing other small, different tasks. What I enjoy is that it always shows a result—you really improve something.

Do you mostly work on houses, or in other settings too?
I actually graduated as an artist and did that first. I ended up here via another route. Art didn't earn enough. Then I spent seven years designing for fashion and interiors, but that paid less and less too. Eventually, I landed in the painting trade. Most projects are in rented housing. I'd say 90% is social housing for housing associations. I like that—it's socially important work. They're not the final customer, but they do see the results. They're also less critical than private homeowners.

Do you have much contact with residents?
Yes, usually briefly—like if a door or window needs to be opened. Sometimes residents have questions, or I do—like if a balcony's full. Usually, it goes smoothly, unless someone makes an impossible request or doesn't respond. If a door won't open, it can be tricky, but that's part of the job.

How do you get power?
In apartment blocks, we usually get electricity from a shared meter cupboard. A lot of tools are battery-powered now, so we charge those and carry on.

2. Introduction project manager

I'm [Project Manager] and manage various projects with a colleague, from [City A] to [City B].

I'm responsible for financial oversight, safety, work preparation, and project handover. I also liaise with clients and am involved in project delivery. Contact with residents is usually handled by the executor. If they can't solve an issue, I step in.

How often are you on site?
Rarely—I try to visit every two weeks, but that doesn't always work out.
What do you do when you are on site?
I walk around the building with the executor. I check progress, how much work is left, whether there are major problems, and if the work is being carried out safely.

What are the challenges in this job?
The biggest challenge is staffing: having enough skilled tradespeople. Many, like carpenters and painters, are over 50 and more prone to physical issues like knee or wrist problems. Heavy manual jobs are becoming less popular. There are very few young painters. Parents often encourage their children to go for less physical, better-paid jobs. There's a perception that this work is lower-paid and low-skilled. It's just less popular. I think we need to pay them more to attract new talent.

What do you see as physically demanding work?
For painters, it's the repetition—constantly doing the same movements when prepping or sanding frames. Climbing scaffolds and standing all day is tiring, especially for people with extra weight. For carpenters, lifting heavy materials like glass and frames is a major strain. Even with lifts, you often still need to carry materials over the scaffold. You're physically busy all day, and as you get older, it gets harder. They also have to work in awkward positions—on their knees or stomach—which is tough. Scaffold dimensions are fixed. Aluminium scaffolding has set heights. It's hard to meet everyone's needs. A bricklayer wants something different to someone fitting frames. That's tricky. I'm also responsible for deciding how the scaffold is set up.

3. Concept evaluation

Concept 1: Duster
[Project Manager]: So basically it's like a wheelbarrow with a built-in battery that also works as a vacuum?
[Painter]: Handy, but I think it's mainly suited for indoor use.
[Project Manager]: Exactly. For example, if you use a leaf blower—what if you reverse the function so it blows instead of vacuums?
[Painter]: If it can blow, then it becomes a leaf blower on wheels. Those battery-powered blowers run out quite quickly, after about 20 minutes. But to be fair, you rarely need them for longer than that anyway.

Do you ever find your battery dies while you're up on scaffolding, and you have to climb down to recharge?
[Painter]: Yes, that happens sometimes. But it also depends on you—you can check the battery beforehand and take a spare. With a bit of planning, you can avoid it.

Do you usually take a wheelbarrow up the scaffold?
[Painter]: No, usually I carry everything up in a little tray. Carpenters do take wheelbarrows though. Especially when it's around freezing—they can't leave paint out in the cold, so it all has to be brought down.

Other tools stay on the scaffold?
[Painter]: Yes, smaller tools usually stay put. If the lads are working on the façade, they often have a wheelbarrow on the scaffold to avoid walking back and forth.

But paint has to come down because of the temperature?
[Painter]: Exactly. A wheelbarrow is also useful if the container is a bit of a walk away. You don't have much space in a wheelbarrow, though—we've got the container for a reason. So you just bring what you need that day. The further the container is, the more useful it is to carry more in one go.

Can the wheelbarrow go in the lift? And how wide is the scaffold?
[Project Manager]: The scaffold is usually about 80 cm wide, I'd say. It could probably drive across, but only if the scaffold is perfectly set up.

What do you mean by "perfect"?
[Project Manager]: Well, sometimes the planks overlap or there are small height differences—bumps of 2 or 3 centimetres, sometimes more. The robot would need to handle that.

Concept 2: Mobile Ladder
[Project Manager]: I think this would mostly be useful indoors. Like, when you're painting with a roller, right?
[Painter]: Yes, that's right. But often you still need to do the top edges with a brush, so you need to get close. It's useful, but only in a perfect scenario. Outside, there's often something in the way—windows or garden beds.
[Project Manager]: Right, it's probably best suited for interiors, like hallways or long walls. That's where I can see it being useful. It also shouldn't be too tall or you could fall off.
[Painter]: Safety is definitely a concern. I wonder if it would comply with VCA (Dutch safety certification) standards.
[Project Manager]: Indoors it would be great—especially for ceiling edges or big wall surfaces. But not outdoors or on scaffolding. Outside, you're dealing with gardens and obstacles. You end up moving stuff more than actually painting.

Do you ever need a step-up on scaffolding?
[Painter]: Yes, sometimes. If this wasn't a big ladder but more like a robot step-up platform for the scaffold—and if it were legally allowed—that would be a great solution.
[Project Manager]: Legally, you can't use a step or ladder on scaffolding. Too dangerous—you might fall off. That's why you'd need an extra floor at a different height, but that comes with other risks like tripping. It's a grey area without a good solution.

Does that have to do with the scaffold's load limits?
[Project Manager]: No, it's mainly safety rules. You can't stand on a step on a scaffold. So to reach something higher, you'd technically need the scaffold rebuilt. Then rebuilt again after you're done to make it walkable. That takes time and isn't practical.

If this robot platform were legally permitted on scaffolding, and it was only half as tall and very stable—would that work?
[Painter]: That would be super useful—for those bits you can just not reach. Perfect.

So you both think it's mainly useful indoors?
[Project Manager]: Definitely useful indoors. The height looks about right. Easy to reach edges and the ceiling.
[Painter]: It'd be great if the height were adjustable too. Sometimes you're still on your toes, and it would be nice to tweak the height a bit. More flexibility would help avoid strain from constantly stretching or bending.

[Project Manager]: So maybe it needs some sort of suspension in the wheels so it can be fine-tuned by a few centimetres.

And what do you think of the built-in tool storage?
[Painter]: That would be handy too—a drawer for bigger tools, or somewhere to keep brushes, paint pots, and cloths.

Concept 3: Scaffolding Attachment
Can you hang this container on the scaffold?
[Project Manager]: Yes, it weighs hardly anything—that's possible. You're allowed to hang a box on the scaffold.
So the scaffolds are strong enough?
[Project Manager]: Yes, especially if it's hung on the inside of the scaffold. That's much better. It's not allowed on the outside due to the risk of falling objects. If people walk underneath, nothing must be able to fall.

The idea is that this trolley can be used on the ground and lift items to the correct height. Then you can take the top part onto the scaffold, where it works as a lifting platform.
[Painter]: Sounds handy—especially for carpenters. They need a workbench more than painters. Though painters could use it too, but carpenters more so.
[Project Manager]: Maybe you could make it larger and turn it into a mobile workstation with compartments for tools—like a hammer or saw?
[Painter]: That'd be smart. If you see what those guys—carpenters and window fitters—haul back and forth every morning and afternoon, just for a few windows and doors... It's like a whole hardware store. And then they still need to go back because they forgot something. If they had everything to hand, it would save loads of time.

And if the trolley could also move over the scaffold? Could it bring tools to someone while they're working?
[Painter]: Depends how much time it saves. If it's faster than walking over yourself, it could be useful.
[Project Manager]: Usually we work per house per day. That means everything for that house is already there. We don't expect to be walking far along the scaffold.
But if the thing could ride into the lift, go to the site cabin and grab coffee—now that would be amazing. Built-in coffee machine would be ideal.

Concept 4: Lifter
[Project Manager]: Maybe this is a better version of what we were just talking about—the mobile workstation. It offers more room to store things.
[Painter]: And this can follow you too, right? If it can carry doors, it'd be a real solution for some people.
[Project Manager]: According to the image, it can carry ladders, so a door should be no problem—if it's stable enough.

[Painter]: Depends on how it's weighted.
[Project Manager]: Or you mirror the racks on the other side so you can place a door there too.
[Painter]: Even if it can't go on the scaffold, it would still be useful for moving things to the lift. Doors are as heavy as a person. If you can put one on a trolley at the container, push it to the lift, and take it from there—that already helps. If the robot could enter the lift and you unload it from above, that'd be perfect.

This robot also has a construction light function. Do you often work in low light?
[Painter]: Yes, very often.

And the lamp runs on battery too?
[Project Manager]: Yes, nowadays most things are battery-powered. You often have power shortages—especially with heavy tools like circular saws that draw a lot of power. So if this trolley had a strong battery, light, storage, and could carry a door—it'd be ideal.

Concept 5: Hooked
This has a lift mechanism to raise items to the right height. It also features a system for hanging tools instead of laying them down. What do you think? Or is hanging tools not really necessary?
[Painter]: Personally, as a painter—not really.
It might be habit. I'm used to holding my paint pot in one hand and the brush in the other. If I start putting things down, I risk knocking them over with my elbow.
[Project Manager]: Usually your brushes stay in the pot. Otherwise you get dripping brushes and it becomes a mess.
But for carpenters I can see the benefit. Hanging a hammer or screwdriver so it's easy to grab makes things more efficient and tidier.

This model also allows you to charge batteries on site. You mentioned before that you use battery tools a lot?
[Painter]: Not that many. Mostly a lamp in the morning and sometimes a sander. It's manageable. Carpenters use way more battery tools.
[Project Manager]: So the hooks and battery charging could be combined with concept 4. That would make a good combo.

Do you always hold the paint pot, or do you ever put it down?
[Painter]: I usually hold it—unless it's really inconvenient.

How heavy is a paint pot?
[Project Manager]: A "verzetblik" (small paint tin) holds up to 400 ml, weighs about half a kilo—not much. The bigger 2.5 kg cans we usually set down, like in a tray. The larger 10-litre buckets for rolling are the same—you don't carry them around.

[Painter]: I'd be really cautious about putting paint tins on a raised surface. They always fall over eventually. Especially if you're moving across a scaffold. I'd rather knock it over on the ground than have it fall from height. That would be a disaster.

Concept 6: Safety Assistant
[Painter]: The translation feature is probably the most useful. That's a big issue for us.

Do you often have communication problems?
[Painter]: Yes, definitely. If it supported all languages, that'd be really helpful. Then you could hire more people who don't speak Dutch. Think Polish, Bulgarian, Turkish for workers, and Arabic for residents. English is useful for those who don't speak Dutch. It would help a lot.

Would it help with resident communication too?
[Project Manager]: Yes, especially with women in Arabic households. They're often at home and don't speak Dutch well. If you need to explain that a window needs to be opened, it often leads to miscommunication. You end up using hand signals to explain.

And what do you think of the posture monitoring?
[Painter]: Sounds interesting in theory. But it might make you nervous too.
[Project Manager]: Plus it might just become an obstacle—the robot itself.
[Painter]: Maybe a smartwatch can already do that? I'm not sure.
[Project Manager]: So we don't see many useful functions here—except the translator.

In what situation would the posture checker be useful?
[Painter]: Maybe just to make you aware. Knowing something's watching your posture might help. But whether I'd listen is another matter. Having a robot next to you 40 hours a week sounds more like a stress factor. I'd end up dreaming about it—like having a police officer with me.

What if it gave softer reminders, like "Take a five-minute break for your health"—would that help?
[Project Manager]: I think it's similar to safety features on machines—people often switch them off because they just want to get the job done. In the end, it's a personal choice: accept some strain to finish quickly, or go steady and safe all day. Most people still choose to push through.

Concept 7: Digit
[Painter]: So basically, this is your job [to the Project Manager], but automated? You can go home—the robot does it for you.
[Project Manager]: We already work with a partner who scans homes with a harness. They walk through the property and capture all measurements. With that data, we get a sort of Google Maps view of the property, accurate to the millimetre.

How does that work technically?
[Project Manager]: It results in a "point cloud"—a kind of 3D scan made of dots. They can also generate photos and technical drawings, like floorplans and elevations.

So you get a very precise map of the building?
[Project Manager]: Yes, exactly. You can even calculate material needs to the millimetre.

Is that also used for outdoor work?
[Project Manager]: Yes. For exteriors, we use a tripod scanner—more accurate than the harness. Indoors, they pause every few metres for detailed scans. Eventually, you get a full map, including photos and drawings. You can see wall thickness, etc. We outsource this scanning—it's not done in-house. But it doesn't tell us how much paint to buy. We still estimate that using software.

Would knowing the exact amount make a big difference?
[Project Manager]: Not really. We know how much we need for, say, 1000 square metres. It's an estimate, and being a tin off either way isn't a big deal.

APPENDIX K. TRANSCRIPT INDUSTRIAL CONTEXT COMPANY C

Interview and concept evaluation with safety expert, safety responsible, project leader, executor, two foreman painters (both aged between 55-64), and one painter (aged between 25-54), from painting company C (industrial context).

1. Introduction executor

I'm [Name], I'm the executor. I partly manage the guys, I do some of the work preparation, I handle work permits, and I'm also involved in part of the maintenance planning.

What are the main challenges in your job?
Keeping the schedule on track so the guys can keep working. I make sure the work permits are in place so they can get started. Without a work permit, they absolutely cannot begin. Looking ahead to make sure they can carry on.

It's quite strict, isn't it?
Yes, it's very strict here. Rules upon rules upon rules. You really have to comply with them. What do I need to do to get my work done? What kind of deviation do we need to request?

Does that often cause delays?
Daily. It happens a lot, especially after an incident – suddenly the lads don't get the permit. Then they want to make an adjustment to the permit, for example to change the PPE (Personal Protective Equipment) or we want to change the working method. These things happen every day here.

Do you do anything to try and prevent these delays?
We try to trigger everything in advance. We do our own risk assessment beforehand. Some work permits you always need by default. We make sure they're already prepared so that the company just has to sign off and the lads can get going.

2. Introduction safety responsible

I'm ultimately responsible for safety. Not so much on site anymore, but I used to be a lot. I've got a team of safety experts who are always out there helping and coaching the lads. We often deal with difficult situations on site. What bothers the lads most is that they often have to work in awkward positions. They have to crawl, sneak, lie down, climb all over things to get their tasks done. These are things a robot would also have to deal with. The spaces they work in are often surrounded by hot pipes. I think the lads often have a very tough job just reaching the workspace.

Are there difficult things in terms of safety?
We have a lot of issues, mostly around basic PPE, but we now have a standard sanction policy for that, so it's going better. But in these working conditions, they sometimes take their goggles off because they're sweating heavily due to the heat, especially when crawling or climbing over pipes. These are the challenges they face. A robot would have to be extremely flexible to get around. And then there are also ATEX zones.

3. Introduction foreman painter A

I manage the guys a bit at the work site. At the moment I'm helping a colleague on-site as it was getting too much for him.

So you're both doing the job and managing the team?
Yes, that's right. I go back and forth between managing people and checking the work.

What do you enjoy most?
That's a tough one. Being outside. Being on the work floor. I don't want to be stuck inside.

What's challenging or difficult?
Getting the job finished. Getting everything sorted out. The planning.

Are there physically demanding parts?
Climbing, scrambling, crawling. Sometimes we go into the building 30 times. Up and down the stairs. The lift is often broken. I reckon just walking to the workplace can mean 400 or 500 steps. I once did 80 floors in one day. Sometimes you also have to carry your materials yourself. There's usually a lift, but it's often out of order. These are just normal stairs, and once you're at the site you go onto the scaffolding.

Have you worked in other settings?
I've also worked in shipbuilding. That was far worse than this. Very tight spaces. Really heavy work – I ruined my back there.

If you had a helper robot, what would you want it to do?
Then I'd just stay at home. That's the downside – the robot takes all the work from us. They're getting smarter all the time.

[Safety responsible]: There'll always be a human involved.
Yes, but it's the difference between one person or ten.
[Executor]: But we don't have those ten people anymore. That's the problem.
Yes, that's true.

4. Introduction younger painter

I'm a painter. I also collect permits. I do a bit of everything. Cleaning up, masking, painting, operating machines, compressor – depends on the day and what needs doing.

Are there things you enjoy doing?
No. Work is never fun, doesn't matter what kind of job it is. No one enjoys getting out of their warm bed. If you ask me, I'd rather sleep a bit longer. We usually start at 6 or 7, sometimes 5am.

What do you find physically tough?
Physically, I don't find it hard. It's more the colleagues that make it difficult. If everyone just did their job or asked what needs doing, you wouldn't have to jump in or think for someone else. The job itself isn't hard. Most people can handle it. If you're struggling, you can always take a break. Only the heat can be a bit much. Some areas are really warm. Physically it's not that bad.

Anything you really hate?
Sanding. I'd rather dig all day. I'm not allowed to use a power tool – I have to sand by hand. When I get home my elbows are wrecked.

Can you switch sanding with other tasks?
Depends. If it needs to be done that day, then it needs to be done. It also depends when the inspection is or when the work needs to continue. If you're tired, you can swap hands or take a rest. But I just hate sanding. Can't stand it.

5. Introduction project leader

I recently became the painting project leader. I'm ultimately responsible for the department.

Are you often on-site?
I used to be assistant project leader. Right now I'm not allowed into the plant because I just had a baby, but I used to always start outside each day and join in on the work floor before heading inside.

Do you have multiple projects at the same time?
Yes. The biggest challenge in my role is keeping an overview. The different people you work with.

What do you enjoy about the job?
Exactly that – keeping the overview. The variety. Solving problems – that's what I like about the job. It's not the same every day. You often get recurring problems, but the variety makes it interesting.

6. Introduction foreman painter B

I work as a foreman. My job is to go to the worksite with a group of lads and make sure the work is done safely.

What do you enjoy most?
Working with the group, working with others.

What can be difficult?
Different people, different languages. Some speak English, Portuguese, Polish.

How do you deal with communication on the team?
We try to explain things several times until people understand.

[Project Leader]: We also try to group people who speak the same language, to reduce the language barrier as much as possible. Sometimes you can't avoid mixing though. A Turkish foreman usually has Turkish workers, and Cape Verdeans and Portuguese tend to be grouped too. But we don't have a Romanian foreman in painting, although we do in other departments. We still group Romanians together, since it's risky work and they need to be able to communicate clearly.

If that's not possible, do you take extra steps to address the language barrier?
[Executor]: It rarely happens that there's no foreman who speaks the needed language. If needed, someone from another department steps in to explain. 9 times out of 10, someone speaks a bit of English and can translate for the rest. We often use someone in the team to act as interpreter.

Concept evaluation

Concept 1: Duster
[Foreman]: This kind of thing already exists, doesn't it? Like those Kräger vacuum cleaners?
[Safety Manager]: What's tricky for us is that we often have to work on scaffolding. You can't easily bring something like that up there. Occasionally we work on ground level, but most of the work is done on the scaffolds because otherwise, you just can't reach.
From a contamination perspective, it's positive – it would save us a lot of work collecting dust. But practically speaking, I don't think it would work for us.
[Painter]: It's perfect for domestic painters. I've worked in that area – lots of sanding with similar machines, loads of fine dust. For that it's great. But here it's different. We mostly get dust at the end of the process. From blasting we get coarse waste – "grit".

Would you use it to vacuum up that grit?
[Executor]: On scaffolding, you have a maximum floor load per square metre – 150kg. Using a vacuum cleaner like that concentrates the weight in one spot, which can quickly exceed the floor load. When blasting, if a few centimetres of grit builds up, we have to clear it to stay within load limits.
Also, we're working in ATEX zones. Our equipment usually stays outside the factory. Then we run long hoses inside to vacuum. In 20 minutes, they can collect a cubic metre of waste – that won't fit in a small cart.
[Painter]: That grit is often a mix of rust and paint flakes – toxic stuff. The robot would have to be completely dustproof.

What about the power supply – does that come from outside the factory as well?
[Executor]: We mostly use air power. Electricity supply tends to be from outside. In confined spaces, only EX-rated equipment or safe voltage (50V) can be used.

Is any work done at ground level?
[Safety Manager]: We do very little from ground level. If you can reach from the ground, maybe just the lowest part of a pipe. But pipes usually go upwards, so you also have to go up. Sometimes pipes run horizontally – that's different – then you can take the equipment along.
A robot like this could be an ignition source, something you wouldn't deal with in house painting.

Concept 2: Mobile Ladder
[Executor]: Not usable for us.
[Painting Foreman]: It only works on flat surfaces. If there's a hole or uneven bit, you'll fall off.
[Safety Manager]: Around tanks at ground level, they sometimes use mobile scaffolds or little ladders.
[Painting Foreman]: A small step ladder you can move yourself – on a stable surface.
[Painter]: Sometimes there's not even enough space for those small ladders.
[Painting Foreman]: Maybe it could work if the robot could fold itself with a button to go under something, and then you press another button to set the height you want to work at. But still, you'd need a stable surface. It won't work on scaffolds.

Concept 3: Scaffolding Attachment
[Painter]: What's the maximum height and the weight limit it can carry? Inside the plant we don't lift anything. You can't lift a pipe – far too heavy. A tin of paint is maybe 10-15kg.
[Executor]: But if you need that paint tin constantly, you wouldn't have to carry it.
[Painter]: Yes, but you don't carry it all day – you put it down. If you're working at ground level then you might hold it the whole time. Otherwise, you just put it next to you and paint.
[Safety Manager]: We often place tins on the scaffold, and things do fall over quite often. That causes environmental issues too. You could use a drip tray so if something spills, it's caught.
[Project Leader]: If the platform you place the paint tin on was a drip tray, then you wouldn't need to put it in one separately. That would be a good add-on.
[Safety Manager]: You could place it at a height where you don't have to bend over.
[Painter]: It'd be handy if you could hang it up and store your tools and materials in it near the work area. Maybe lockable – like a locker. Then you don't have to take everything back to the container every time. Compact and simple. We often have to take gear back down because others need it, or things go missing. Also useful for hoses – air hoses, blowers.
[Safety Manager]: That would reduce physical strain too.
[Painter]: That box in the picture (AI visualisation) looks handy. But it needs to be secure so it doesn't move about. You could hang a few of those boxes in different places on the scaffold. At the end of the day, you store your gear in them – nothing left lying around.

Concept 4: Lifter
How high can you go with this?
[Safety Manager]: Only really usable for small scaffolds or maintenance jobs – those tend to use smaller setups.
[Executor]: Yes, for maintenance it could work. For small fixes at ground level. A robot that follows you with all your materials.
[Painter]: It's handy. Maybe two robots on [location 1], two on [location 2]. If we've got maintenance work, the robot goes straight there and I've got all my gear ready. Not sure how well it'd work in the main plant.
[Executor]: You could get a lot done with it. You go to the site, robot follows, your cart's there. End of the day, it leaves with you, back to the charging dock. It's your personal cart, your toolbox that comes and goes with you.
[Painter]: Then you don't need to stop by the warehouse. Everyone has their own gear. No more "I lost my stuff."
[Executor]: Your cart, your tools. It's got potential. Like a personal kit cart that follows you and carries everything you need.

Lighting function
[Painter]: We often lack light, especially in the mornings or in winter. That's why many lads use headlamps or big work lights.
[Executor]: Then the cart could come to the site and light the area. But you'd need to position it right so you don't block your own light. The lads use headlamps now – wherever they look, that's where the light is.
[Painter]: Even then, you still need a small light to get into the corners.

Concept 5: Hooked
On the battery charging function:
[Safety Manager]: Batteries aren't allowed to be swapped inside the factory anyway.
[Painter]: We're not even allowed to mix paint inside. Everything gets prepped downstairs, outside. It would be handy if we could charge the batteries at the end of the day though.
[Painting Foreman 1]: I'm worried the batteries would get stolen.
[Safety Manager]: I think it could work in non-explosive areas.
[Painter]: I reckon it would be great on demolition or construction sites. They use a lot of equipment there.

On the lift mechanism and storage box:
[Safety Manager]: In terms of dropped objects, this could be useful.
[Painter]: Most of our tools have a safety line attached – even our pliers.
[Safety Manager]: But not the power tools. You could temporarily store those. If you put them in the middle of the scaffold, there's a chance someone will trip over them.
[Painter]: Yes, that's handy then. Some lads still make the mistake of leaving stuff in dangerous places.
[Safety Manager]: You often see masks left behind in storage areas. For falling objects, I can see the benefit. There's a lot of gear that gets left lying around.

Concept 6: Safety Assistant
On the hazard warning function:
[Safety Manager]: At [location], someone was on a scaffold, stepped backwards and tripped over part of the structure. He needed several stitches. It could work well as a site inspection tool.
[Executor]: I can see something in that – a compact device on the scaffold, monitoring a few people, shouting "Watch out" when it spots danger.
[Painter]: If it's small and worn on your uniform – you know how tight the workspace is. But if it's constantly warning "Watch the scaffold, watch the scaffold," it'll just cause stress.
[Executor]: That's what needs to be programmed in – what the robot warns for and what it ignores. Something at eye level you can see yourself, but if it sees you stepping backwards towards an edge, that's when it should warn.
[Painter]: Yes, that'd be helpful.
[Executor]: It's scanning for you constantly. What you can see yourself, it ignores. But everything lower, it monitors continuously.
[Safety Manager]: You really can't see everything on your worksite all the time.

On live translation:
[Painting Foreman 2]: I think that would be interesting for teams with multiple languages.
[Painter]: That translation feature would be very handy. Online, you've got earbuds that translate live when someone speaks in another language.
[Executor]: It's like a fast version of Google Translate that speaks aloud. You're giving your morning briefing, two Romanian lads are there, and the robot speaks your words in Romanian.
[Painter]: That's really useful for scheduling as well – no more worrying about who speaks what language.
[Executor]: It works both ways. The lads can speak Romanian, and the robot translates it back into Dutch.

On posture warnings:
[Painting Foreman 1]: Not sure there's any point. You don't move like that for nothing. It might warn you, but you still have to do it.
[Painter]: How else are we meant to do the job?
[Project Leader]: I think it depends on the person. Some can handle more than others. They know when it's too much and that they can adjust or swap jobs.
[Safety Manager]: Some people are quite small as well.
[Painter]: You get used to it. First few weeks my neck hurt, now it doesn't.
[Executor]: There's a point to it though. If someone's stuck in the same position too long, the robot could give a warning. In hot weather we already rotate shifts to give the lads a break. If the robot monitors how long someone's in one position and advises a break, it could help with health.

[Safety Manager]: That continuous monitoring by the robot – we currently do WBGT (heat stress) measurements. It measures humidity, perceived temperature, and actual pipe temperature. Based on that we decide whether to carry on, stop, or take measures. Right now, it's only done on request. If someone's dealing with hot pipes and the heat's too much, they come to us and we take a reading. But we're nearly always dealing with hot pipes.
If the robot could continuously measure this, like gas monitors already do, it could give an alert when the temperature gets too high.

These readings are only done on request. On really hot days, it's more routine – after the first and second breaks. Often after the second break they have to stop due to the heat. There's usually a spike in temperature between the first and second breaks. Even at 18°C it can already feel too hot. In summer, it's a real problem. We're constantly called inside to take readings – fully suited up.

[Project Leader]: The workspace is sealed off to be dust-tight, which creates a greenhouse effect. Pipes can get up to 200°C. The room heats up quickly.

[Safety Manager]: We're not allowed to ventilate in the evening either – it affects the quality of the blasting. After each break we take a reading, but if a robot could do that constantly, it could flag it earlier and tell the team to stop or take measures. Measures depend on how hot it gets. In some cases they have to rotate every 30 minutes. Our current readings are just snapshots. We might take a reading at 1pm, but it could've been too hot already at 11am. Then they've been working in it too long.
If a compact robot could measure right at the worksite, that'd be a big help.

[Executor]: With blasting, it's different again. The robot has to be truly dustproof. And it needs a strong signal, or no one will hear it.
[Project Leader]: Maybe better to notify the safety team instead of shouting at the workers.
[Safety Manager]: Our equipment has to be ATEX-certified due to spark/fire risks. Even with forklifts, someone has to go ahead with a gas meter. If levels get too high, you shut off the engine. They're extremely strict here – more so than other sites.
The robot could also handle gas leak detection, but dust can interfere with the readings. That's why we don't test directly at the site – the meter would go off constantly.
[Painter]: There are a few "hondjes" on site – little boxes with a camera, phone, Bluetooth, SOS alert. Very handy. You can contact the control room. If you added sensors to that, it'd be perfect. It's got a small screen too.
[Executor]: That should be on wheels, following someone, doing heat readings, and relaying info by phone.
[Painter]: We used to have other devices we had to charge daily. Now they need a code and only charge once a month. They're smaller and faster now.
[Executor]: We never get large workspaces. The scaffolds are built as small as possible – bigger ones are too expensive.

Concept 7: Digit

On scanning the space to detect leaks:

[Painter]: Will it scan everything from the outside? More like mapping an internal space? Then no, it won't work. In some places I work, I can barely get in myself. It's so tight.

[Executor]: If it were a smaller concept – like a compact robot with a camera – then yes. Right now, someone has to go in with a breathing apparatus to find leaks. A robot with the right sensors could do that.

[Painter]: Could it be a drone? Someone outside flying it?

[Executor]: It needs to be really compact. Maybe it could roll on the scaffold with tracks. If it has the right sensors to detect leaks, it'd be useful.

[Painter]: That'd be great. Could it also measure pipe thickness? Then show a 3D model and mark the leak. That'd help – it's dangerous sending people in to look for leaks.

[Project Leader]: They already have devices that scan and create 3D models – we use them to create our drawings.

[Painter]: But then no one would have to go inside.

[Project Leader]: That would really help with safety.

On advising about safety risks:

[Painter]: I don't think that would work. It'll just report you straight away. "Why aren't you wearing your goggles?"

[Executor]: I get that. You're sanding without a dust mask, and at first, there's not much dust. Then the robot says, "Put your mask on, mate." It's analysing the environment.

[Painter]: The machine won't know if I've taken my goggles off just to wipe sweat or if I forgot them. It'll jump straight to: "No goggles? Put them on."

[Executor]: You could build in a 1–2–3 rule. Three warnings, and if you still ignore it, then it logs a report.

We're already really strict on PPE. If the guys go into confined spaces and there's even a little dust, they've already got masks and goggles on.

On scanning the room:

[Painter]: For domestic painting, that feature might actually work.

It could also do a surface inventory. Would that help you, [Project Leader]?

[Project Leader]: That'd be brilliant. At the moment, we base everything off isometrics. But in reality, it's always slightly bigger or smaller. Knowing the exact size means you can reuse leftover material on the next job. It would really help with accurate billing.

APPENDIX L. INITIAL ROBOT FUNCTIONALITY CARDS

Form

Form

4+ wheels

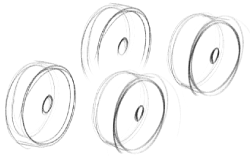

Functionalities

Functionalities

Lift paint buckets

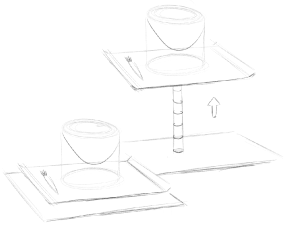

Interaction

Interaction

Manually move robot

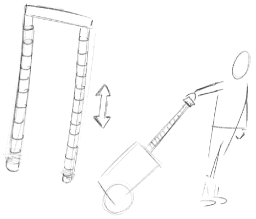

Form

How do you imagine the support robot to look like?

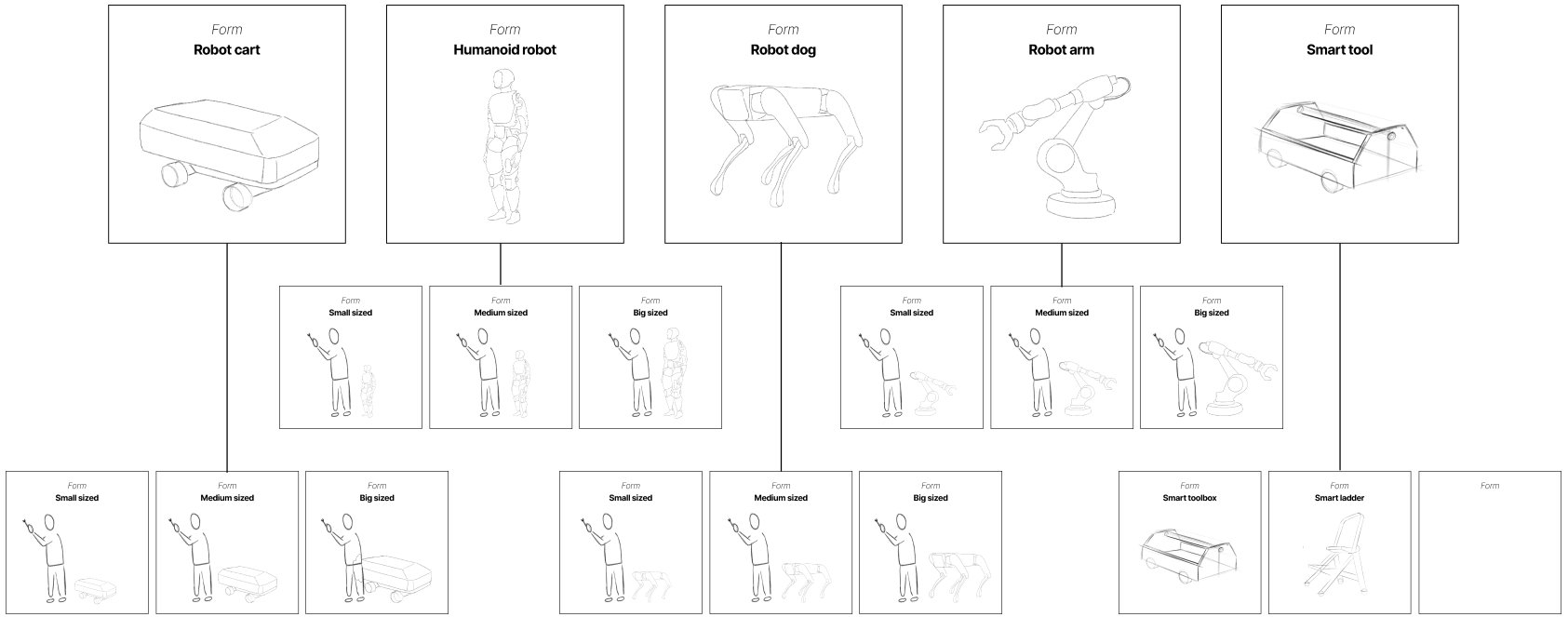

Second version



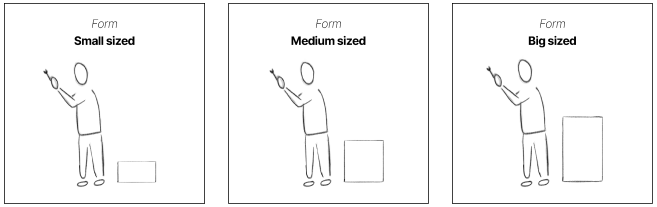

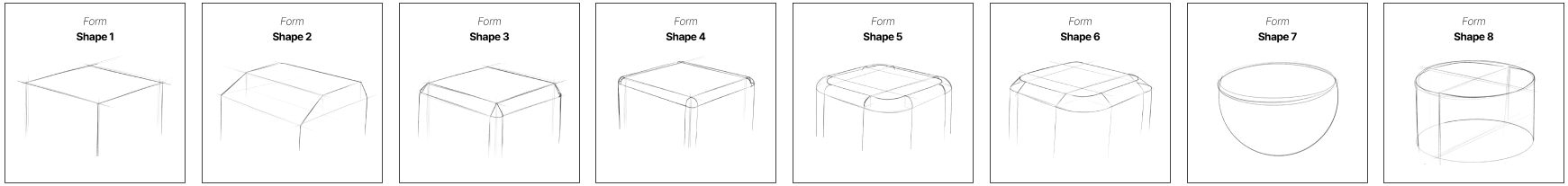

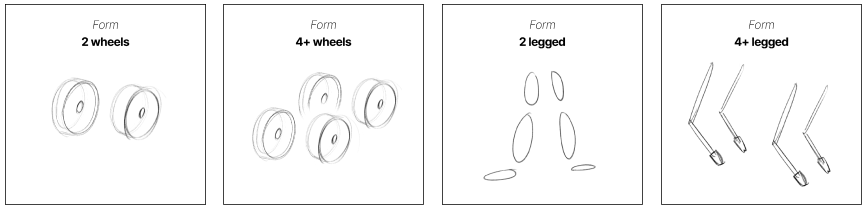

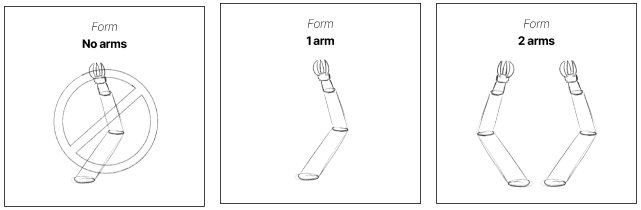

Functionalities

What kind of functionalities do you want the robot to have?

Safety support
The robot enhances safety by monitoring for hazards and offering functionalities to reduce risks.

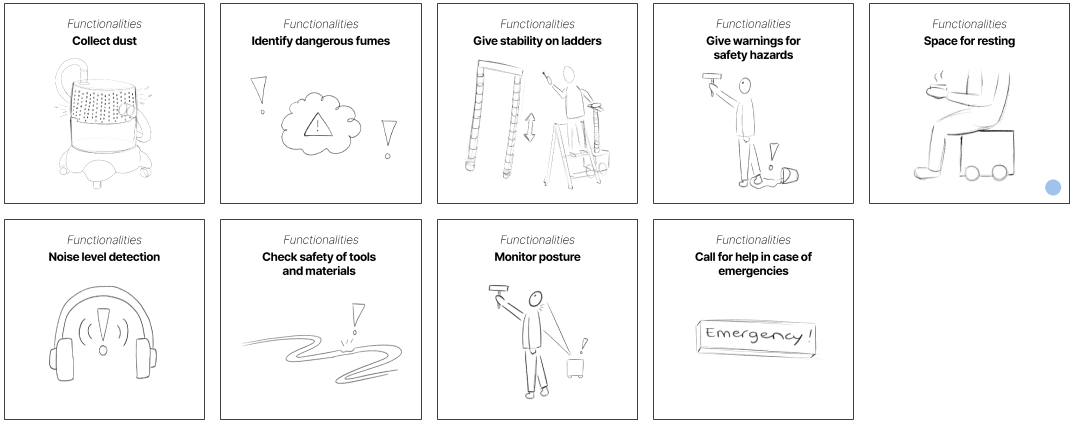

Organisation and storage
The robot organises and stores the tools and materials.

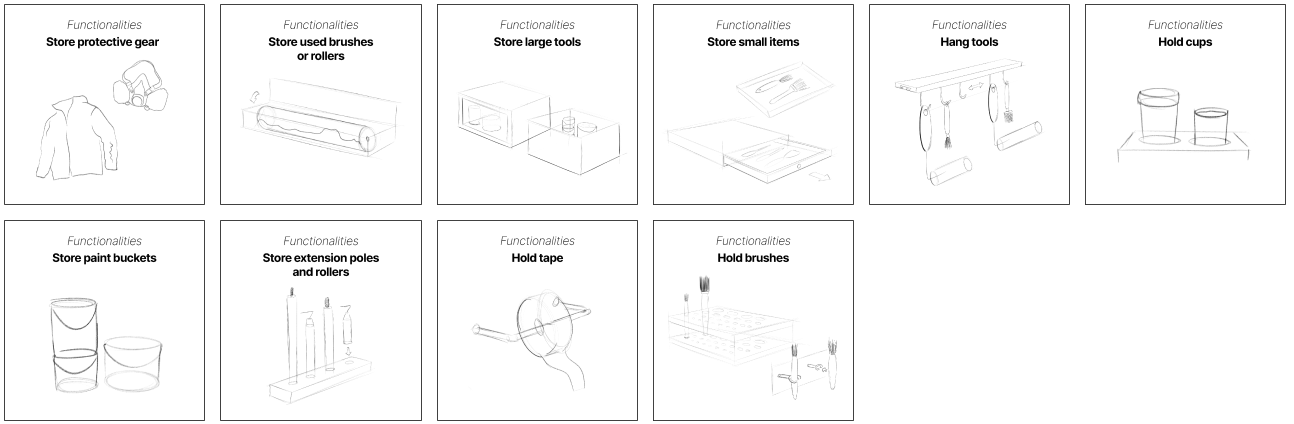

Physical support
The robot assists with physically demanding tasks, reducing the physical strain.

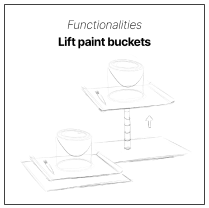





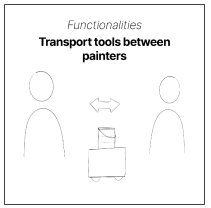

Tool and material maintenance
The robot ensures painting materials and tools are and stay in optimal conditions.

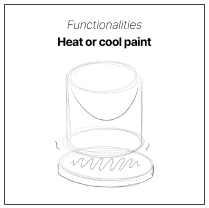



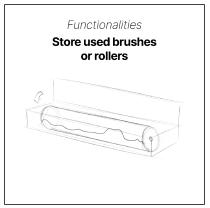

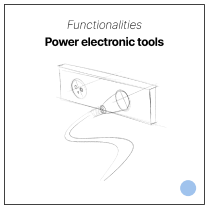



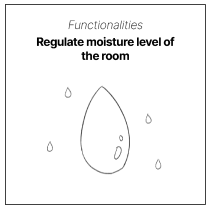

Mobility and navigation
Functionalities regarding the robot's mobility on the job site.

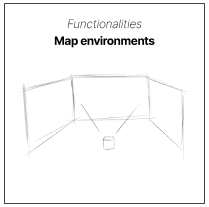





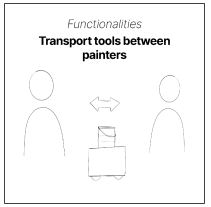

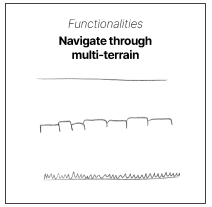

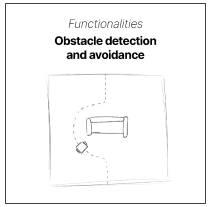

Cleaning environment
The robot is used for keeping the job site clean.

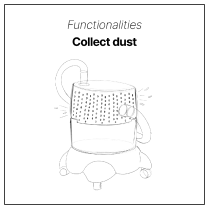



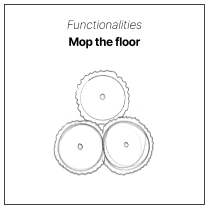





Workplace atmosphere
The robot is used to enhance workplace atmosphere



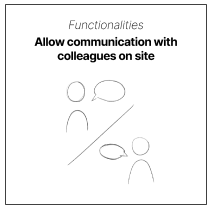





Interaction

How would you like to control the robot?







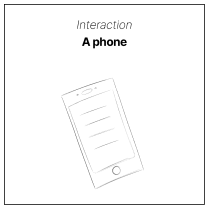

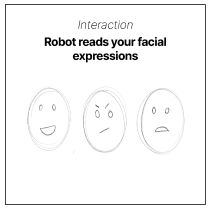

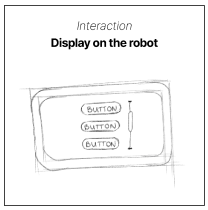

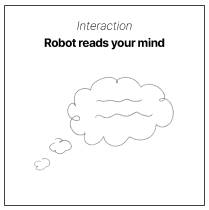

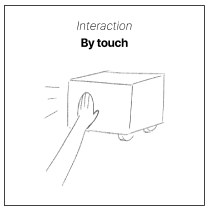



How would you like the robot to give you information?

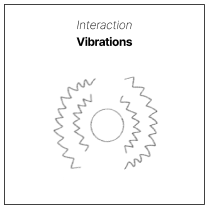

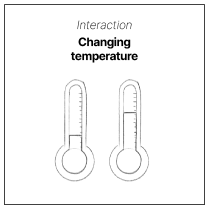

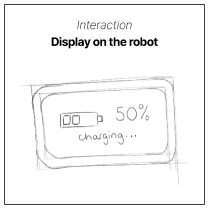

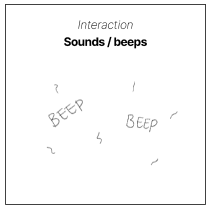

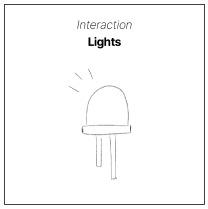



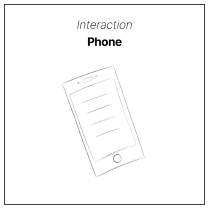



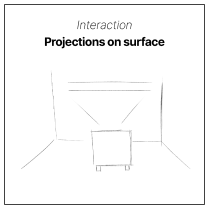

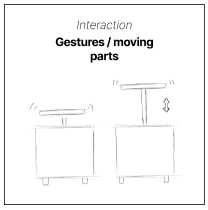

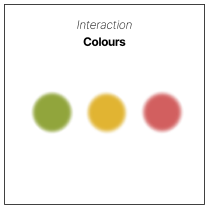

How much control would you like to have over the acts of the robot?

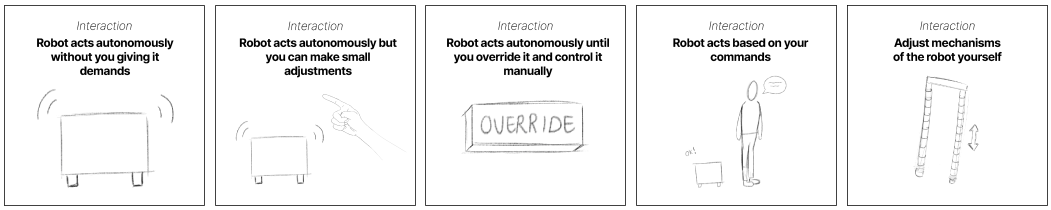

How much control would you like to have over the navigation of the robot?

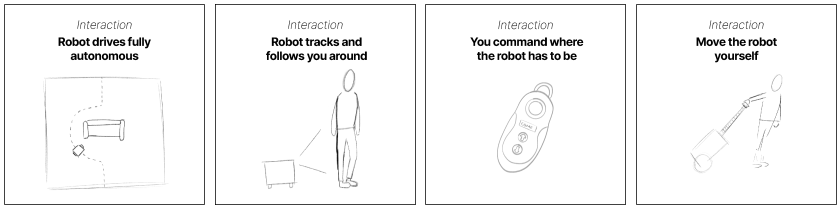

APPENDIX M. CURRENT TOOLS



Ergonomic paint brush
(RGS Group, 2019)



Tool and paint belt
(King's Harness, n.d.)



Stilts (Stilts, n.d.)



Brush extenders
(Amazon, 2021)



Roller cleaner
(Amazon, 2023)



Painting tool storage rack
(Amazon, 2019)



Magnetic paint clips
(Amazon, 2024)



Brush drawers
(Meeden Art, 2024)



Mobile modular storage box
(Purdy, 2022)



Paint mixer



Ladder lift



Construction lift



Cherry picker



Mobile storage box
on site (with lock)

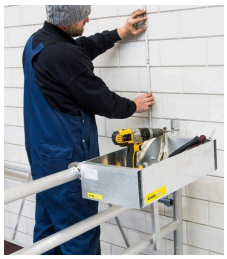



Tool tray to hang on scaffolding



Exoskeleton






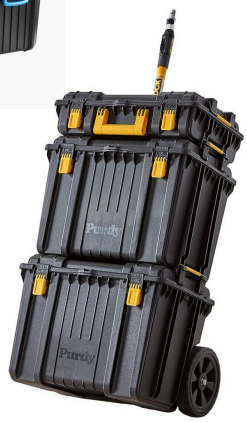


















Photos by Stanley Works





Turning knob for speed
Using icons rabbit (fast) and turtle (slow)



Wheel lock lever
Prevent product from moving

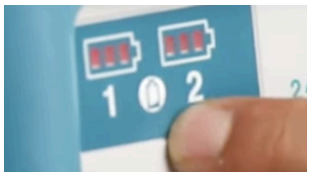

Lights for battery indicator
To see how much battery your product has left



Big power button
To easily turn on and off the product by tapping



Screw locking mechanism
Using icons to explain which directions to turn for locking and unlockingk



Red and white lines
Give warnings to users about misuse



Button with icons
1 means turn on vacuum
0 means turn off
The tool icon means that the vacuum is connected with a tool

Makita, n.d.















Turning knob
Switching between modus Man (=manual), 0 (=off) and Auto (=automatic)

Turning knob
Increase and decrease power



Stop button with arrow
Use your foot to stop the vacuum cleaner. Arrow indicates where you have to kick




Green colour
Make buttons and knobs that user needs to use a colour that stands out and is contrasting with the rest of the product

Arrows
Cues that you can turn the handle



Handle
Push down

Instruction visuals
Step by step instructions how to use the product



Latch
To open garbage container



Latch
To attach another module to the product

+ and - buttons
To increase and decrease power

Power button
Using typical on/off icon

Festool, n.d.


Makita
STANLEY


Makita
DEWALT
Milwaukee

APPENDIX N. CREATIVE FACILITATION RESULTS

1. Ideation session with students





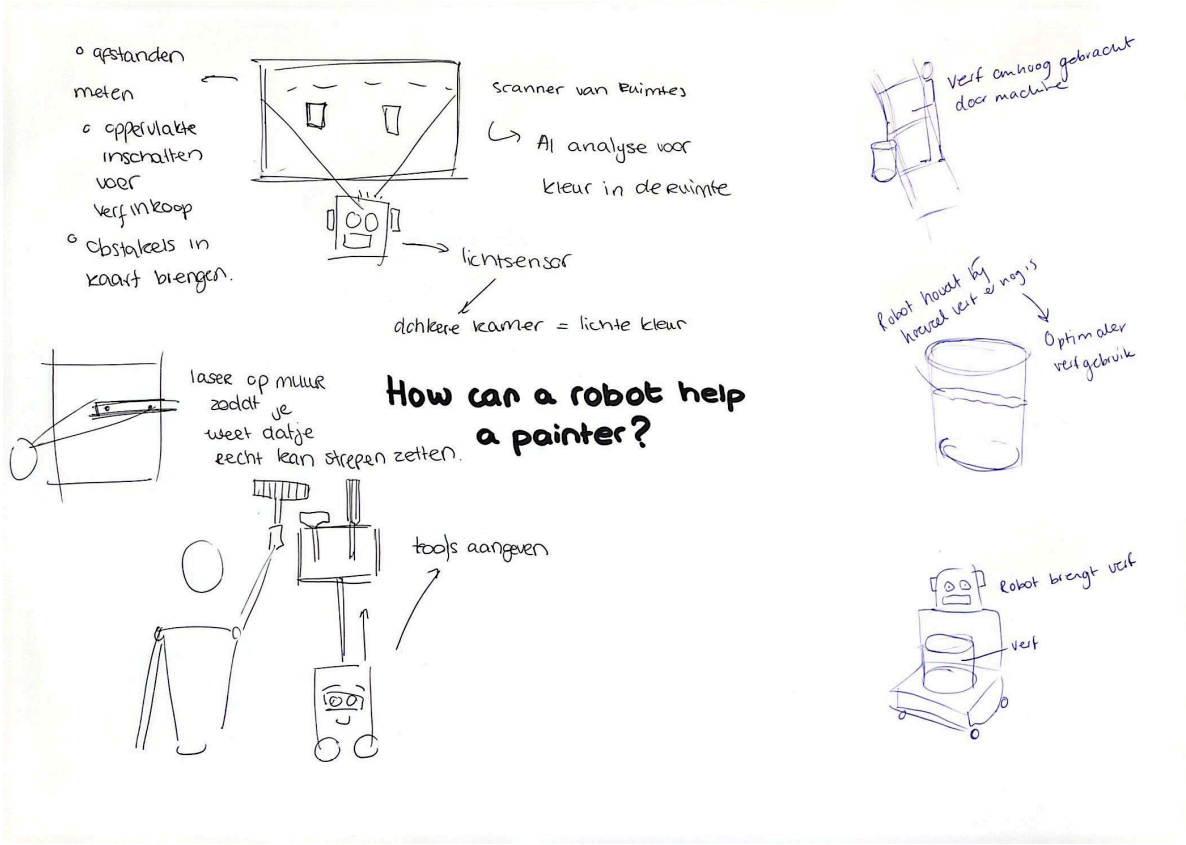
o afstanden meten
o oppervlakte inschatten voor verfinkoop
o obstakels in kaart brengen.
scanner van ruimtes
AI analyse voor kleur in de ruimte
lichtsensor
dichtere kamer = lichte kleur
verf omhoog gebracht door machine
Robot houdt bij hoeveel verf er nog is
Optimaler verfgebruik
laser op muur zodat je weet datje recht kan strepen zetten.
How can a robot help a painter?
tools aangeven
Robot brengt verf
verf

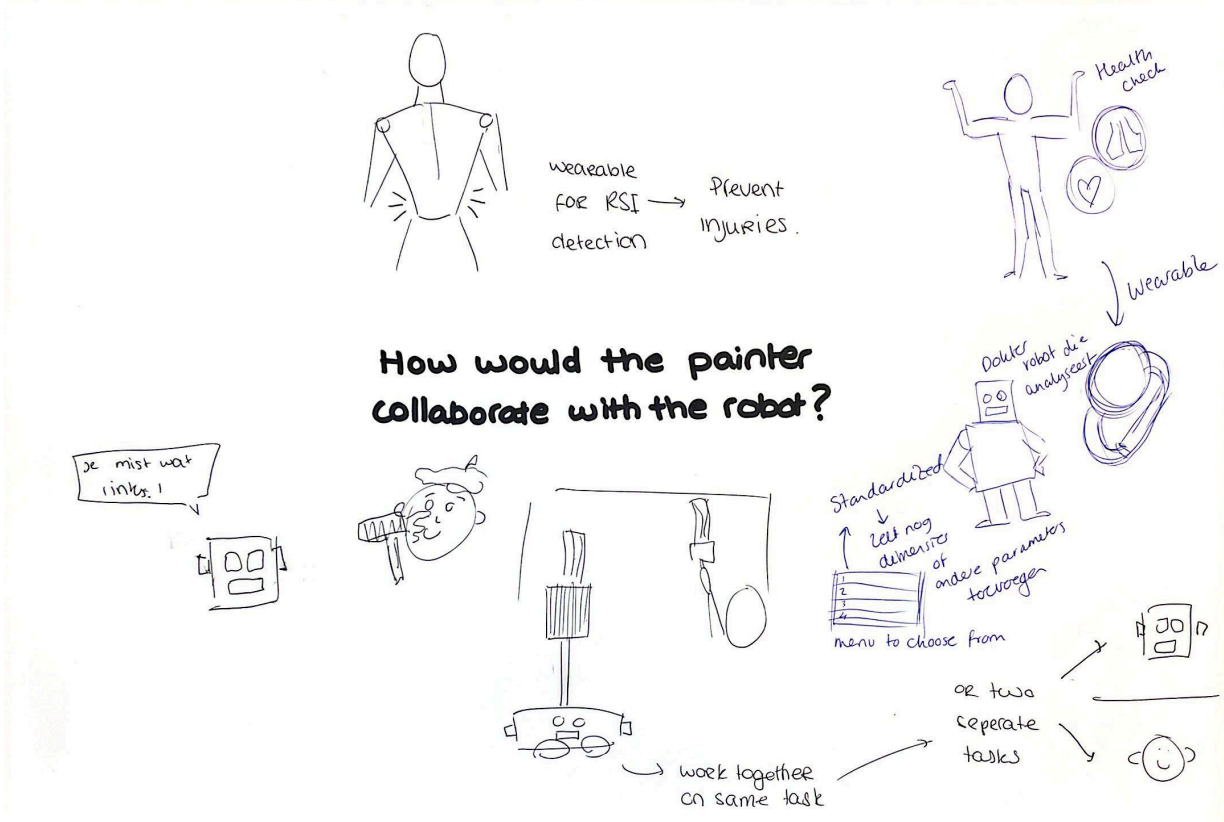
wearable for RSI detection
Prevent injuries.
Health check
wearable
How would the painter collaborate with the robot?
Dokter robot die analyseert
je mist wat links!
Standardized
zelf nog dimensies of andere parameters toevoegen
menu to choose from
or two seperate tasks
work together on same task

2. Activities with OnderhoudNL

On September 24, two colleagues of De Eendracht working for SUSAG and one of OnderhoudNL came to the TU Delft. I presented my design direction, asked questions and organised a small creative workshop. Some key insights from the meeting are summarised below

- Project funded by subsidy MDIEU. SUSAG won't buy it, they want the robot to be available.
- A lot of work is done on scaffolding, maybe 20% is done on the ground. For in-house they see a transition to spray paints
- For the robot, think about how to keep it clean
- What painters love to do most might change.
- Keep in mind the weight of the robot and the maximum dimensions as it has to be loaded in a van/car.





The set-up



Step 1) Write down as much tools and materials painters use as possible



Step 2) Read the post-its and stack the doubles together



Step 3) Place post-its in the matrix



Step 4) Discuss final results

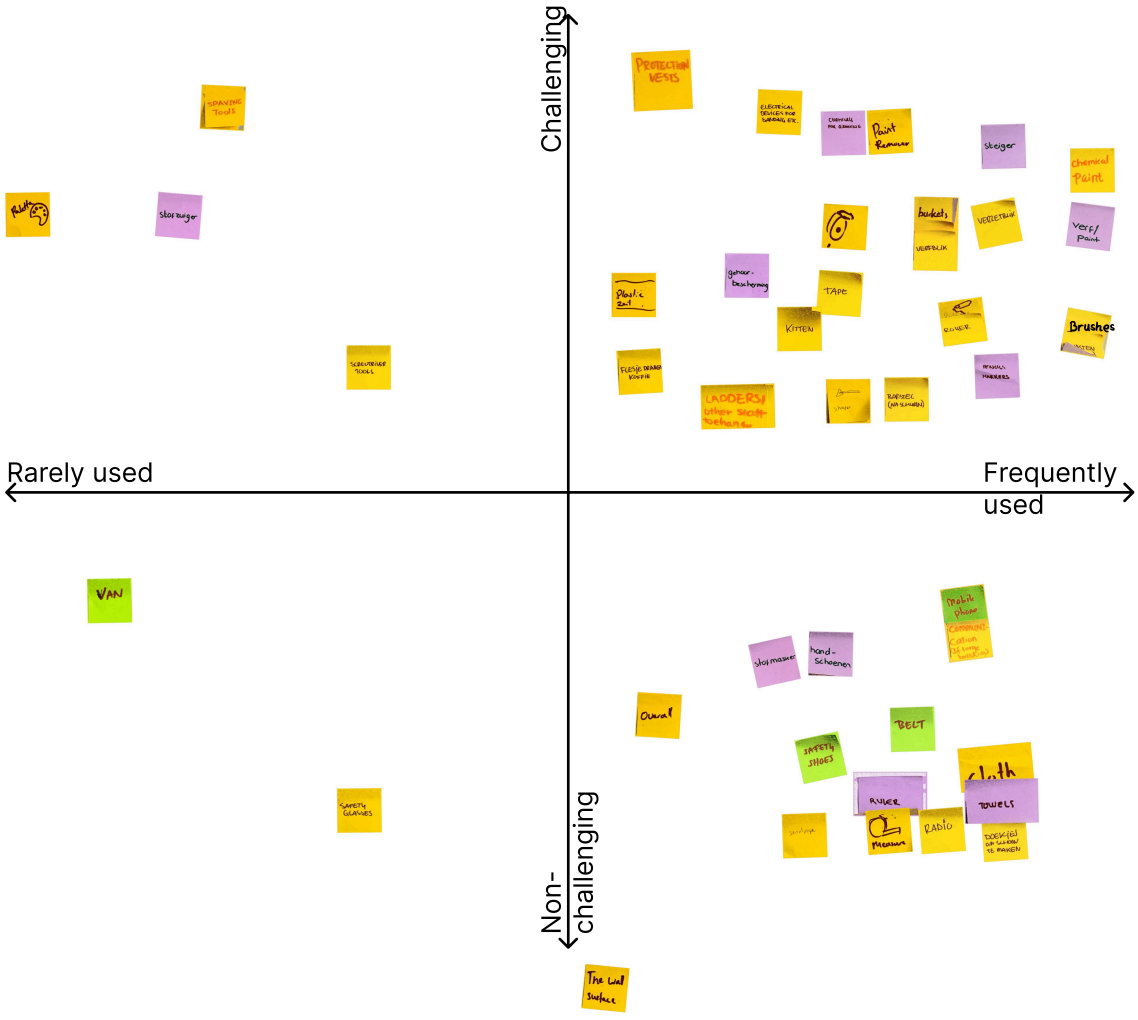

3. Ideation with HRI lab

I have done a creative workshop with five fellow designers (four at location, one online). During the workshop, I use several methods (purging, brainstorming, brainwriting and pitching) from the book Road map for Creative Problem Solving Techniques by Heijne & Van der Meer (2019). First, the participants received a little background information about the painting profession, followed by a purge how a robot could assist in the context. After that, the insights gathered from the interview were presented. With this knowledge, the participants started brainstorming for the problem statement:

In what ways can a robot support a painter when working on outside jobs?

After brainstorming, the participants were asked to choose their favourite idea and to make a sketch how they visualise it. After 5 minutes, all the papers were passed on and they would add their own ideas about the concepts. Finally, everyone pitched their final result.



Step 1) Purge



Step 2) Brainstorming using interview insights and Robot building blocks



Step 3) Choosing favourite ideas



Step 4) Brainsketching

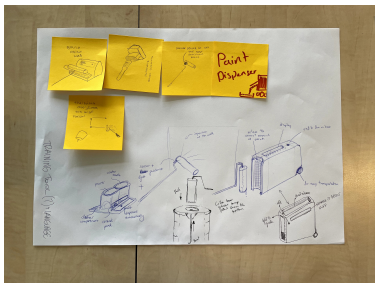

Step 5) Pitch final results

Purge
Goal: Clear the minds of the participants and write down all options they already have

Tools: Post-its, markers, A3 to stick post-its on

Instructions to participant: *How could a robot help painters? Write down your first ideas.*

Output:
- Exoskeleton
- Catch paint drops
- Do the painting
- Transport the painter
- Cleaning
- Transport the paint or tools
- Bringing objects / lifting / heavy objects
- Reaching points hard for humans
- Security helpers
- Improve the perception (of painters)
- Planner
- Task support
- Help with hard to reach items
- Robot providing data about the progress
- Automate large objects so painter doesn't have to carry heavy things
- Vertical roomba
- Robot that prompts taking breaks
- Mix colour creation robot
- Robotic ladder that changes positions automatically to find the best ergonomic position to paint
- Fall protection / safety net
- Robotic brush/roller that transforms automatically to reach difficult places
- Paint the wall
- Inclined intelligent support

Brainstorming
Goal: Diverging, coming up with ideas to solve problem statement

Tools: Post-its, markers, A3 to stick post-its on, printed version of interview insights, robot building blocks

Instructions to participant: *In what ways can a robot support a painter when working on outside jobs? When you paste a post-it to the A3, please read the idea out loud.*

Output:

- Mobile power plug
- A kind of generator robot for electricity
- Paint dispenser
- Weather forecast → job planning
- Hand cleaning with airblade
- Automating cleaning process: clean up tools after use
- Gesture motion control the cherry picker
- Attachment to the cherry picker
- Brush paint load (dispenses the right amount of paint)
- Blow dry recent applied paint
- Calculator role. It can be an AI thing that evaluates everything
- Energy usage estimation
- Automatically taping the window
- A robot that can decrease the level of humidity
- A robot translator that can overcome language barriers
- Translator ball robot
- A robot that entertain / motivate painter during the work
- Complain collector robot
- Mobile noise canceling (to reduce noise for tenants)
- A robot that can enhance our senses during the job (or after = reviewer)
- Weather protection tool
- Surveillance robot detecting potential hazards & emergency call function
- Annoying reminders to wear protective gear
- Industrial robot
- Sensor roller to get the most efficient rolls
- Automatic brush cleaning
- Training projector for guide motion
- Moisture remover robot
- A big robotic arm that moves you around
- Measuring surface area with laser scan
- Laser paint remover to remove old paint
- Light emitter that follows the painter

Interactive brainsketching & pitching ideas
Goal: Making the ideas richer, build on each others ideas, explain the idea.

Tools: 1 A3 per person, markers

Instructions to participant: *First select your favourite idea or combine multiple post-its that form one idea. Make a sketch how you visualise the idea. You can use keywords to explain your drawing. Next, pass on your paper and add your ideas to the next drawing. Repeat until you have your own original idea.*

Idea 1: Laser paint remover to remove old paint
This robot helps the painter to remove the old paint using a laser. There are different ways of integrating the laser in the workflow of the painter.

The first idea is to control the robot standing on a tripod and the painter can point it to the areas that need to be cleaned. It kind of feels like a shooting game and can also make the job more fun.

The second idea is to attach the robot to a window frame. The robot then automatically moves around the frame and cleans the window.

The third idea is to make the robot stick to the surface. By moving up, down, left and right the robot can clean the entire wall. It can also work together with multiple robots.

The fourth idea is an all-in-one universal tool where different modules can be clicked on. The tool is like an extendable stick of which the length can be adjusted. One of the modules is a laser to clean the old paint, but you can also attach a roller, brush, sanding device and more.

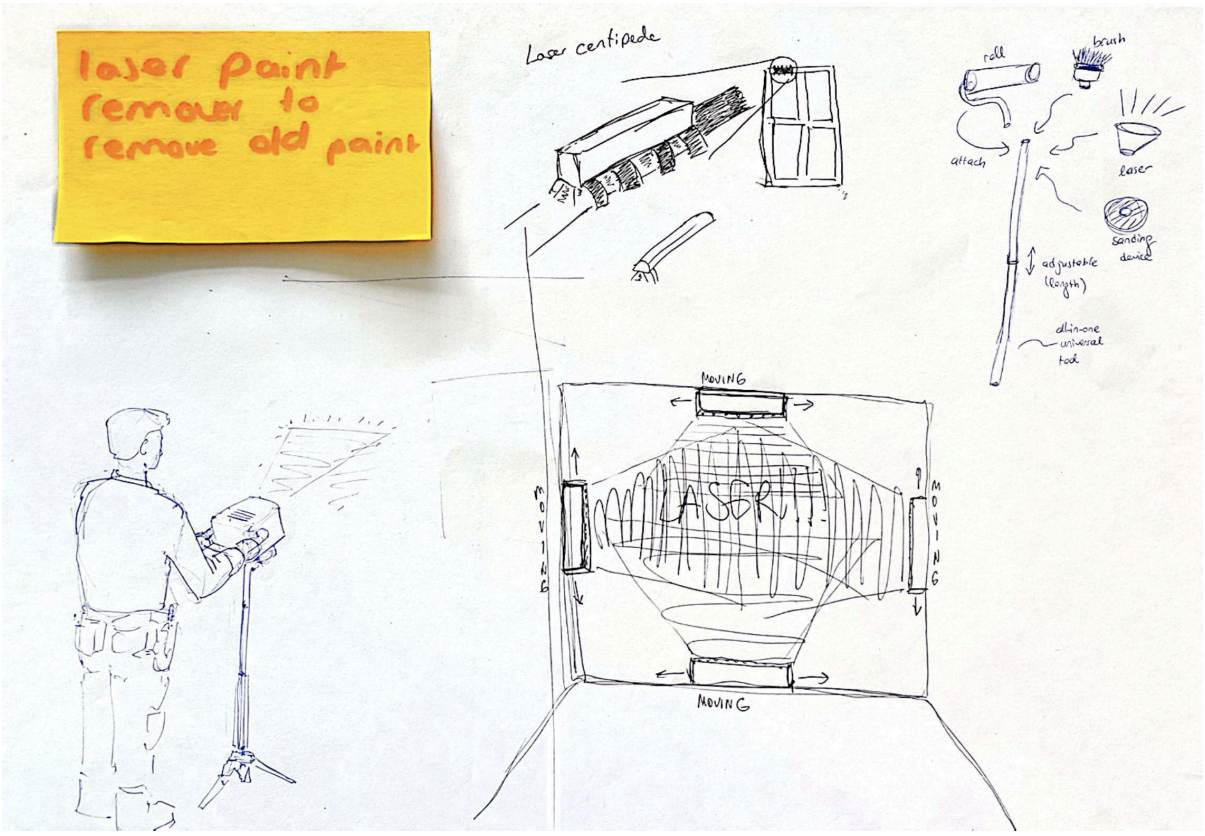

Idea 2: Sun protection
A device that can be hung up on the wall and protects the painter from the sun by providing shade.

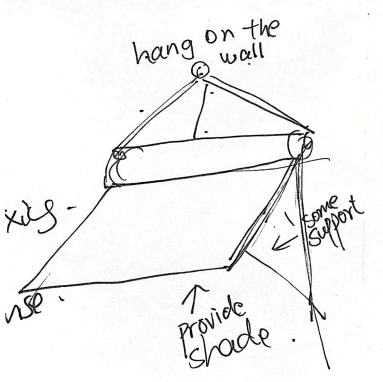

Idea 3: Smart paint dispenser
This robot dispenses the right amount of paint for rollers and brushes. There are several ideas for dispensing the paint onto brushes and rollers.

In one idea the robot has a compartment for paint and water in the middle. On both sides there is a tray where on one side the paint is dispenses and on the other side water. Used brushes can be cleaned in the water. It is controlled by the painter using a control panel.

In another idea, the roller is pushed into a round compartment where it is filled with paint, kind of like a beer glass that is being filled from the bottom.

In another idea there is a slot in the circular shape of a roller where the painters can push the roller against. The paint is then dispensed on the roller. The robot also has a compartment where the paint can be refilled. It can have a volume indicator so the painter can see when it needs to be refilled.

Another idea is a device that both mixes paint using vibrations and dispenses paint in a tray where painters can dip in their paint brush.

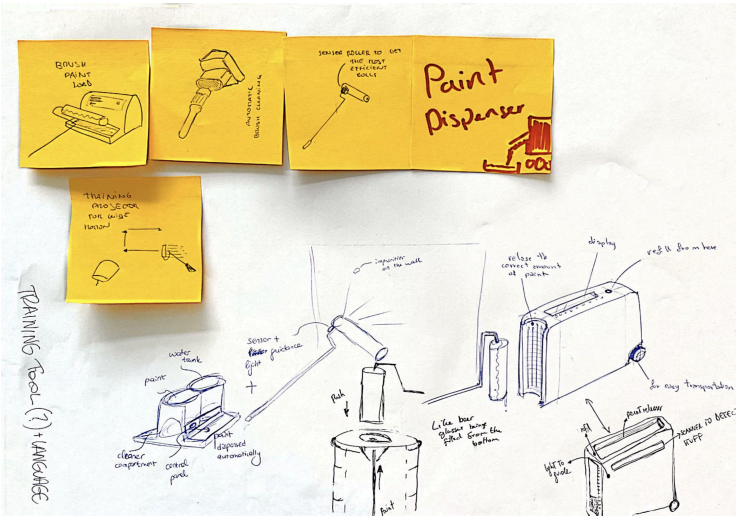

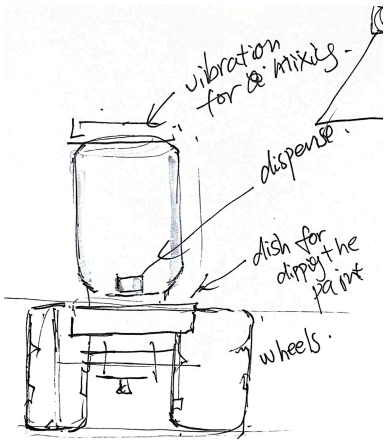

Idea 4: AI assistant
This robot is an AI assistant that gives advice and warnings to the painter. There are a few different ways of implementing the AI assistant:

1. As a wearable. The robot gives information about the weather, like rain forecast. It has a speaker so that it can talk to you and has a microphone so that the painter can control it using speech. You can also control it with large buttons.

2. Integrated in safety equipment, AR protective glasses. It provides information about the painting job and humidity level, it gives warnings and advice. Integrated speaker and microphone that immediately translates when someone speaks to you in a different language.

3. A mobile robot. It moves around the workspace and gives warnings. It can also translate and enhance communication between colleagues from different nationalities

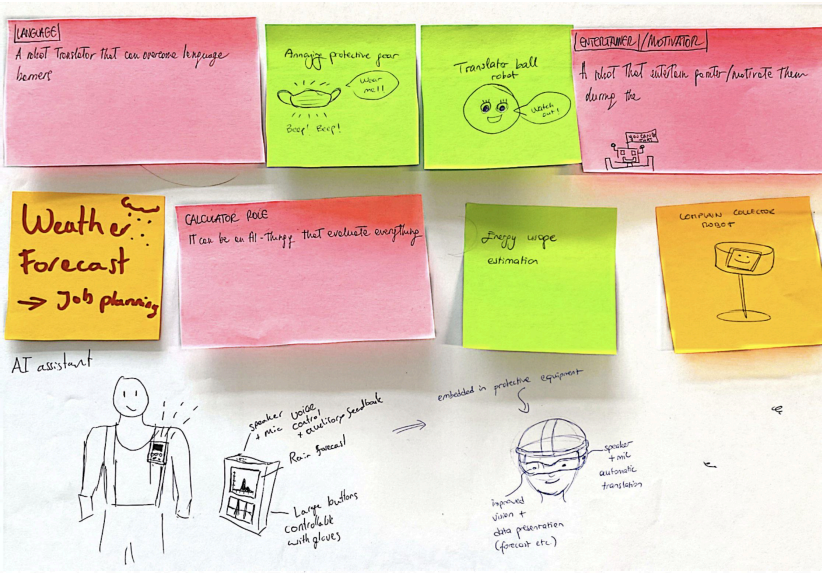

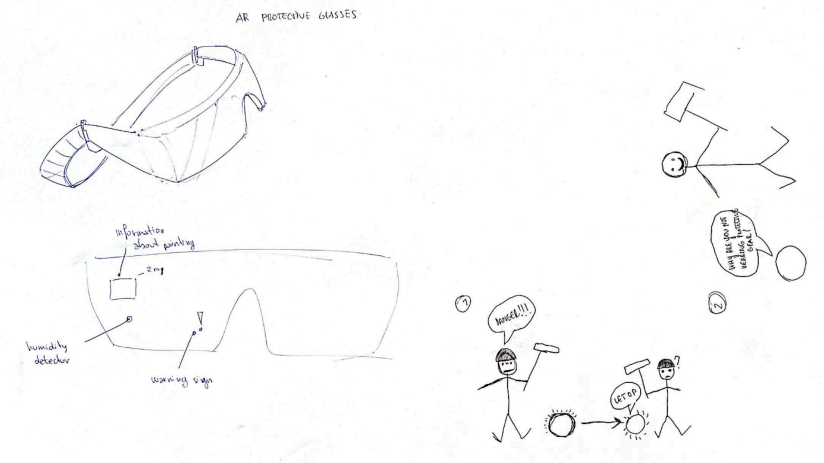

Idea 5: Dehumidifier
This robot's purpose is to dehumidify the surfaces so that the painters can still do paint work while the humidity level is higher than 85%.

In one version, the robot is attached on the facade of the building with wires. The wires can move the robot in any direction on the wall. This robot dehumidifies the work area of the painter. It also has integrated lights so that the painter can work in the dark.

In a different version, it is a capsule attached to the cherry picker that covers both the painter and part of the wall surface. The environment in the bubble is regulated such as humidity level and temperature. It can create the perfect environment for the paint to dry to increase quality. Another advantage is that the sound of sanding machine is blocked by the capsule. The capsule can also have an added storage space.

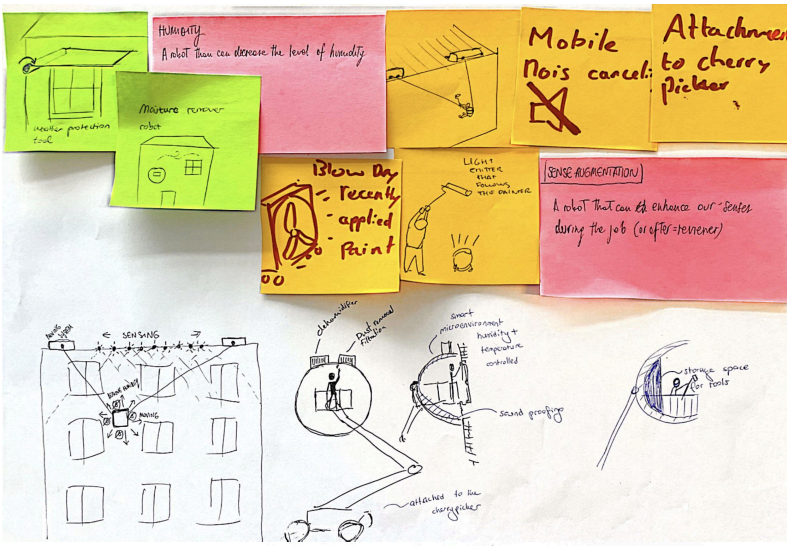

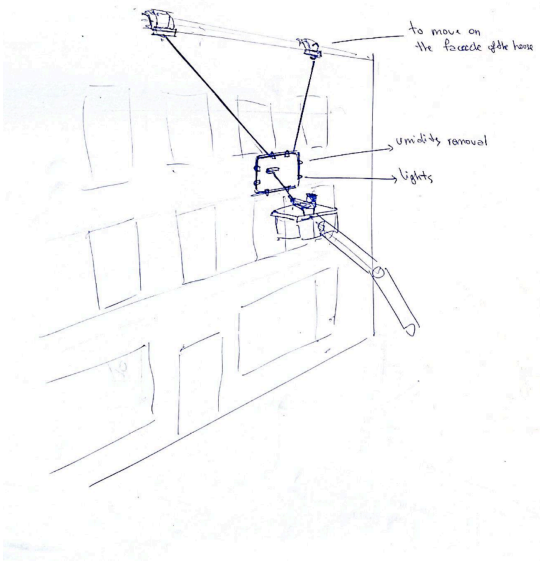

4. Ideation with Spark design & innovation

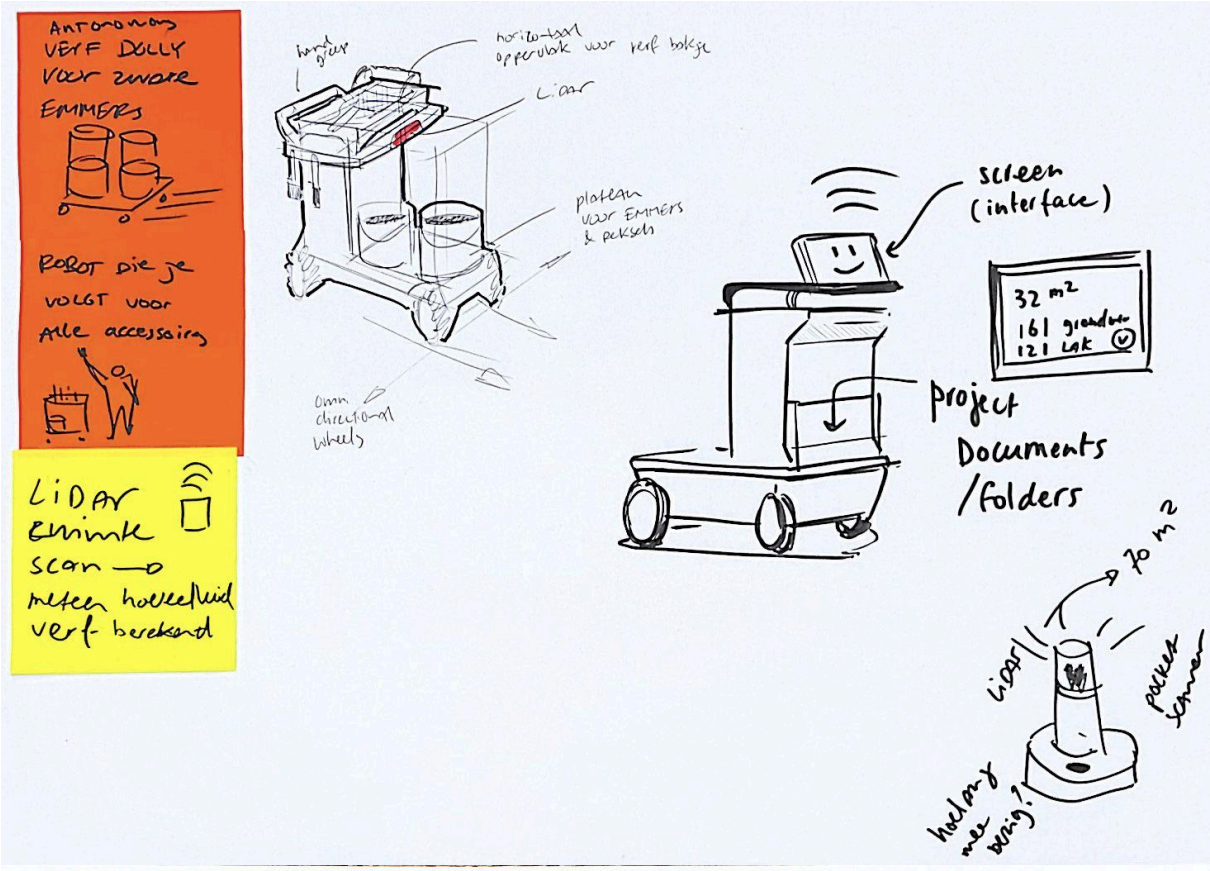

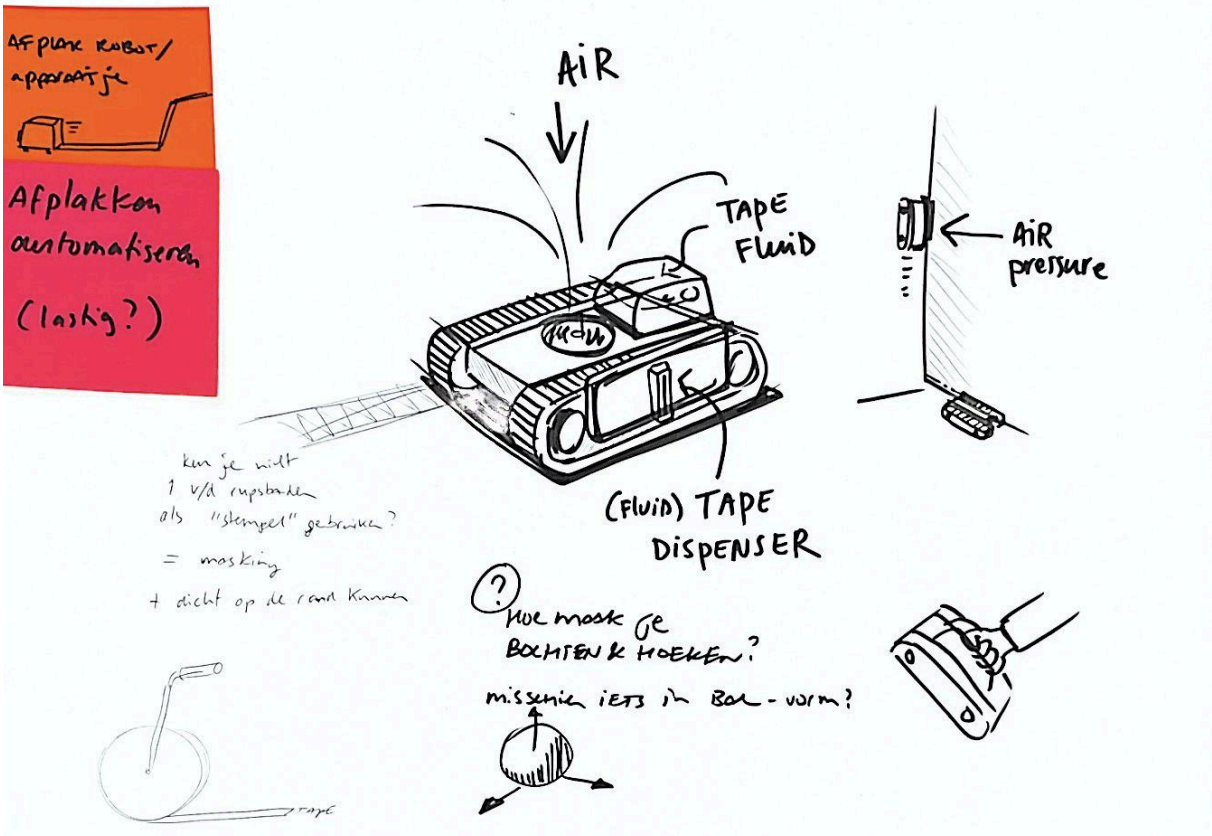

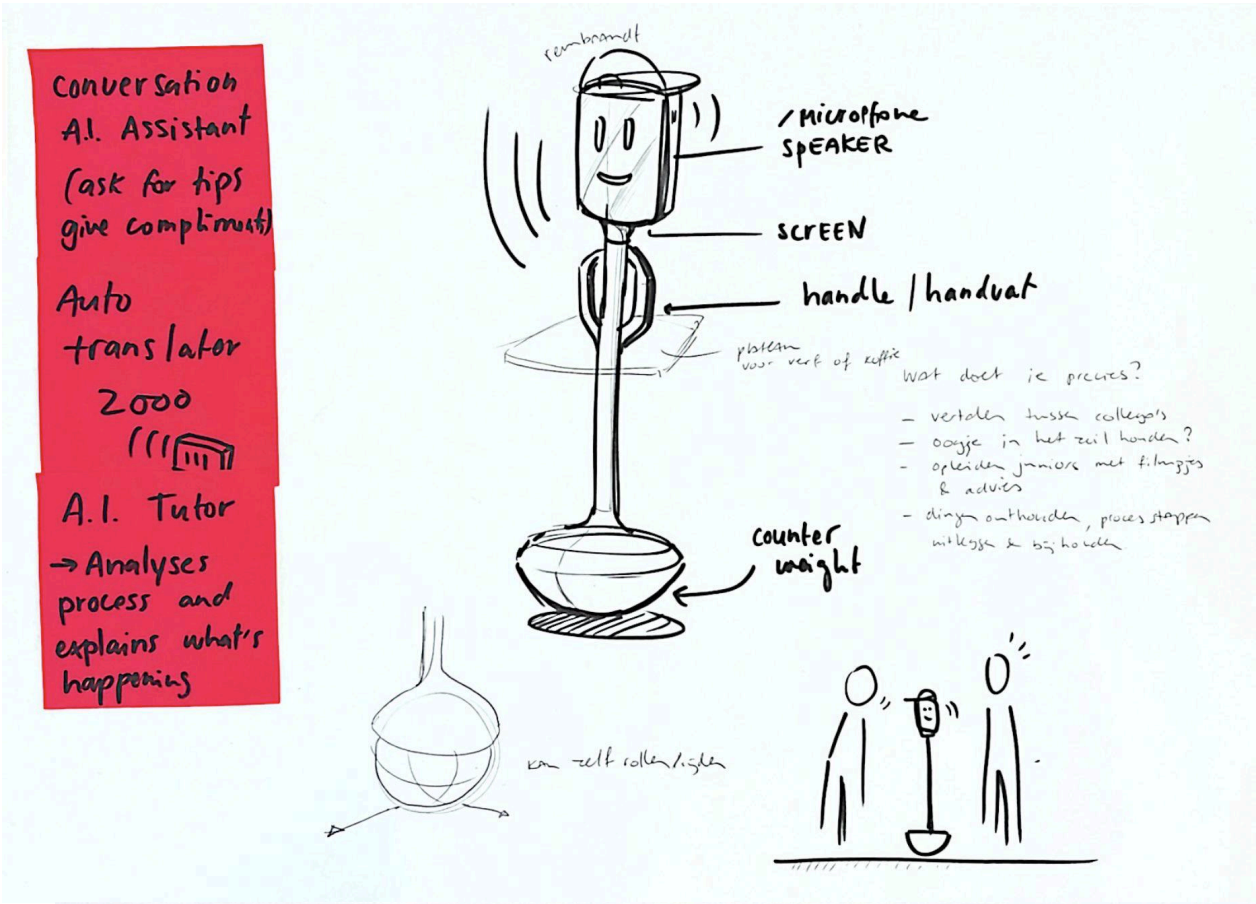
Conversation
A.I. Assistant
(ask for tips
give compliments)
Auto
translator
2000
A.I. Tutor
→ Analyses
process and
explains what's
happening
rembrandt
/microphone
SPEAKER
SCREEN
handle / handvat
plateau
voor verf of koffie
Wat doet ie precies?
- vertalen tussen collega's
- oogje in het zeil houden?
- opleiden juniors met filmpjes
& advies
- dingen onthouden, proces stappen
uitleggen & bijhouden
counter
weight
kan zelf rollen/rijden

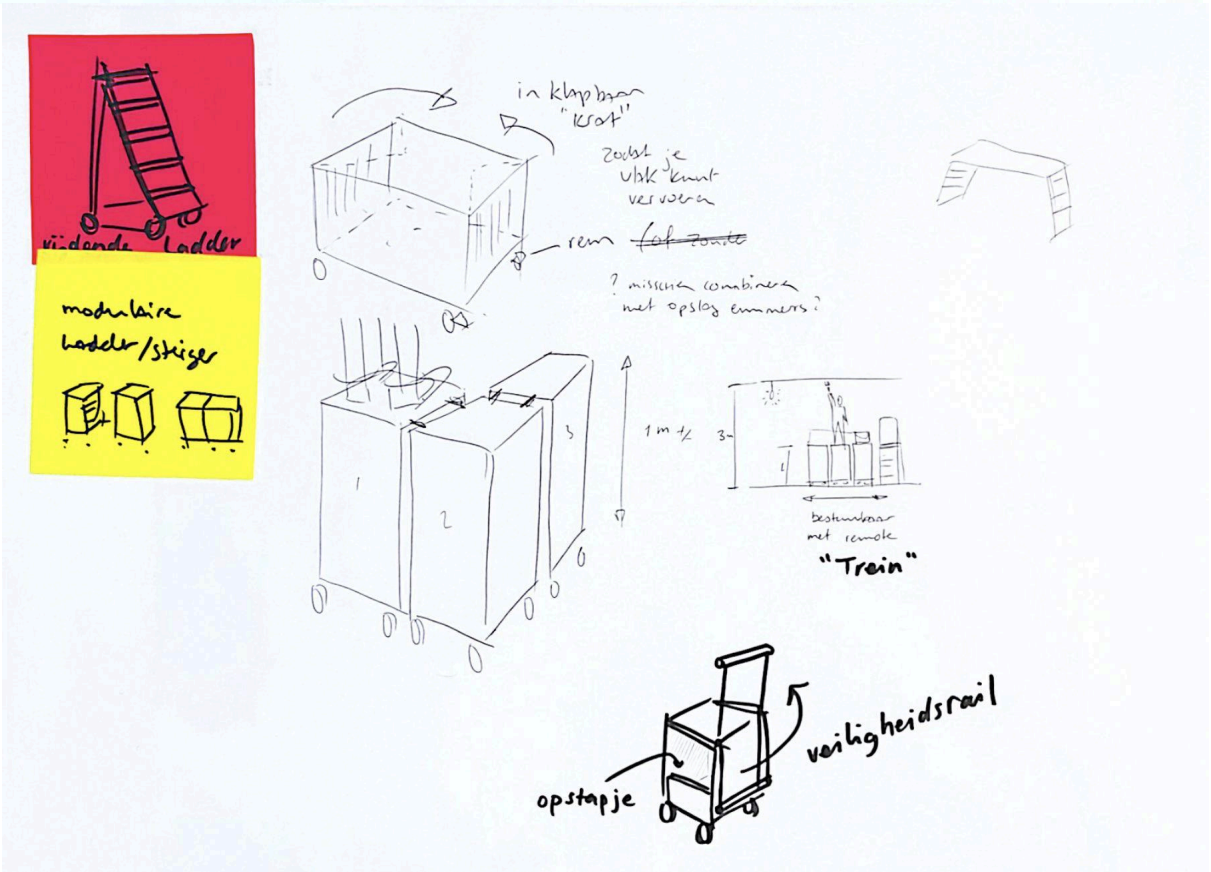
vijdende Ladder
modulaire
ladder/steiger
in klapbaar
"krat"
zodat je
vlak kunt
vervoeren
rem
? misschien combineren
met opslag emmers?
1 m +/-
3m
bestuurbaar
met remote
"Trein"
veiligheidsrail
opstapje

APPENDIX 0. AI-GENERATED IMAGES

Exploration

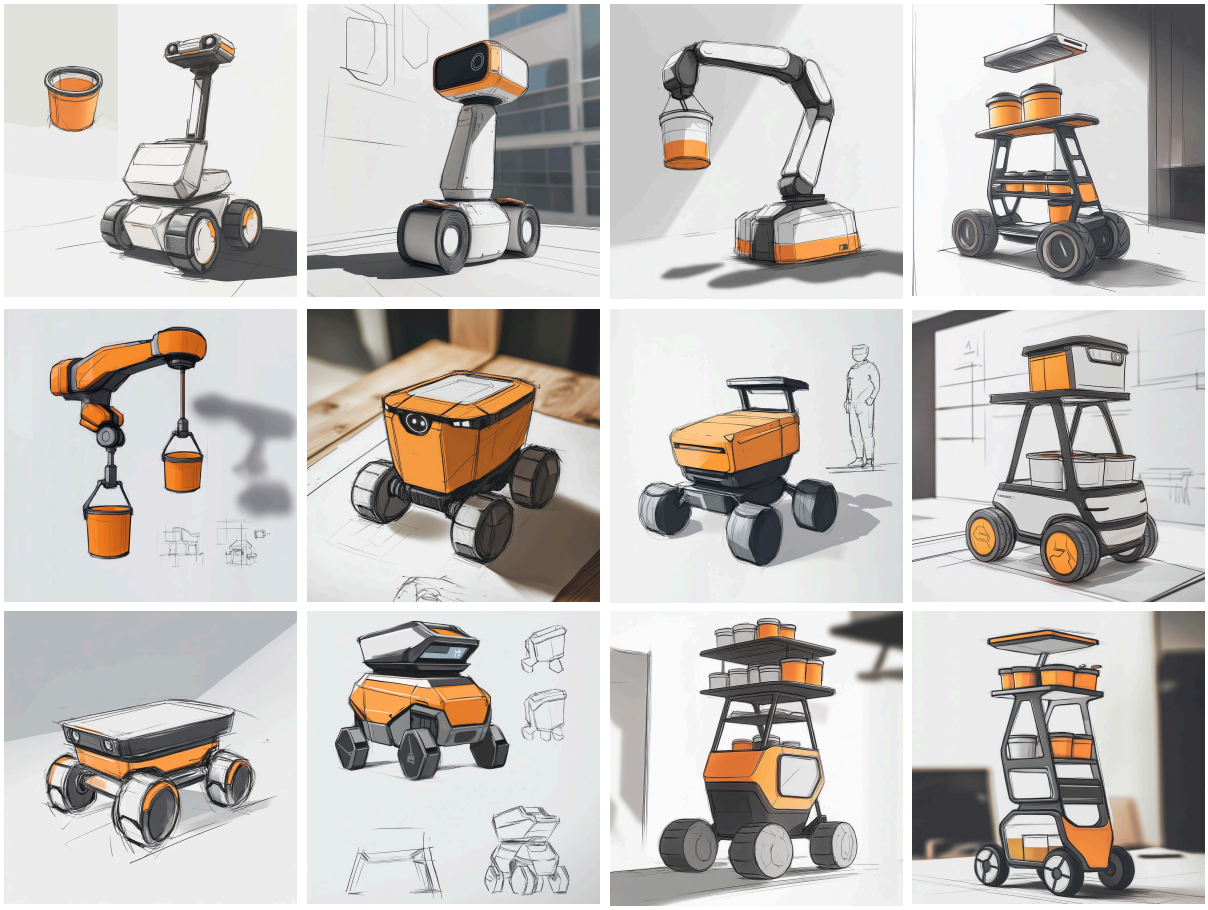

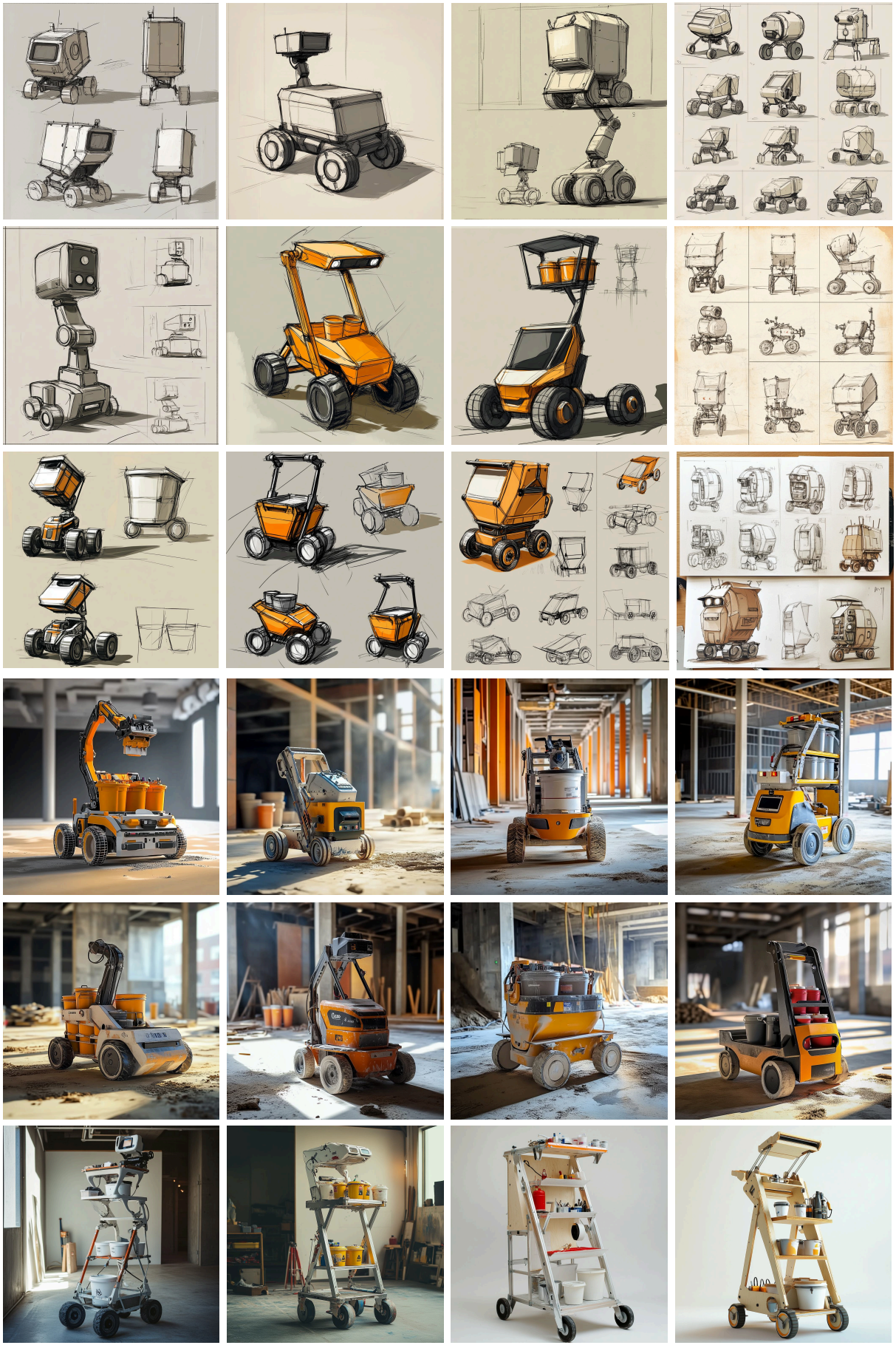

Concept 1: Duster



Concept 2: Mobile stairs



Concept 3: Scaffolding attachment

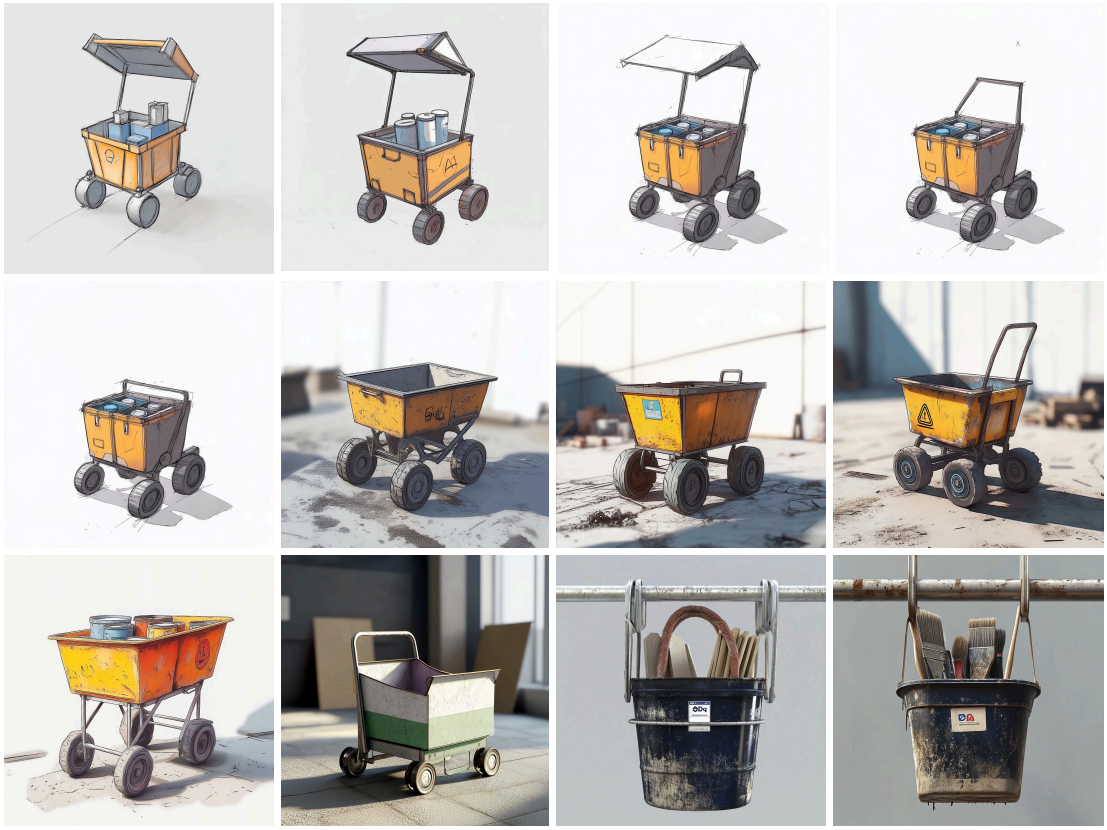

Concept 4: Lifter

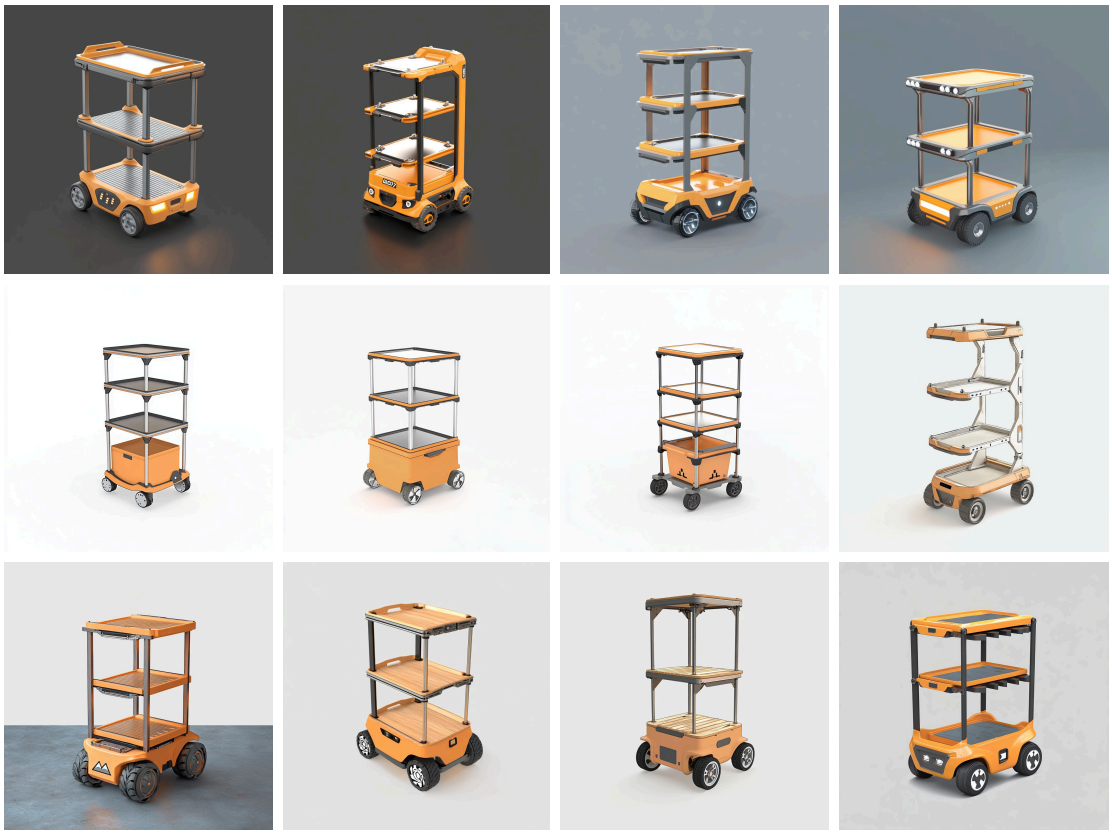

Concept 5: Hooked

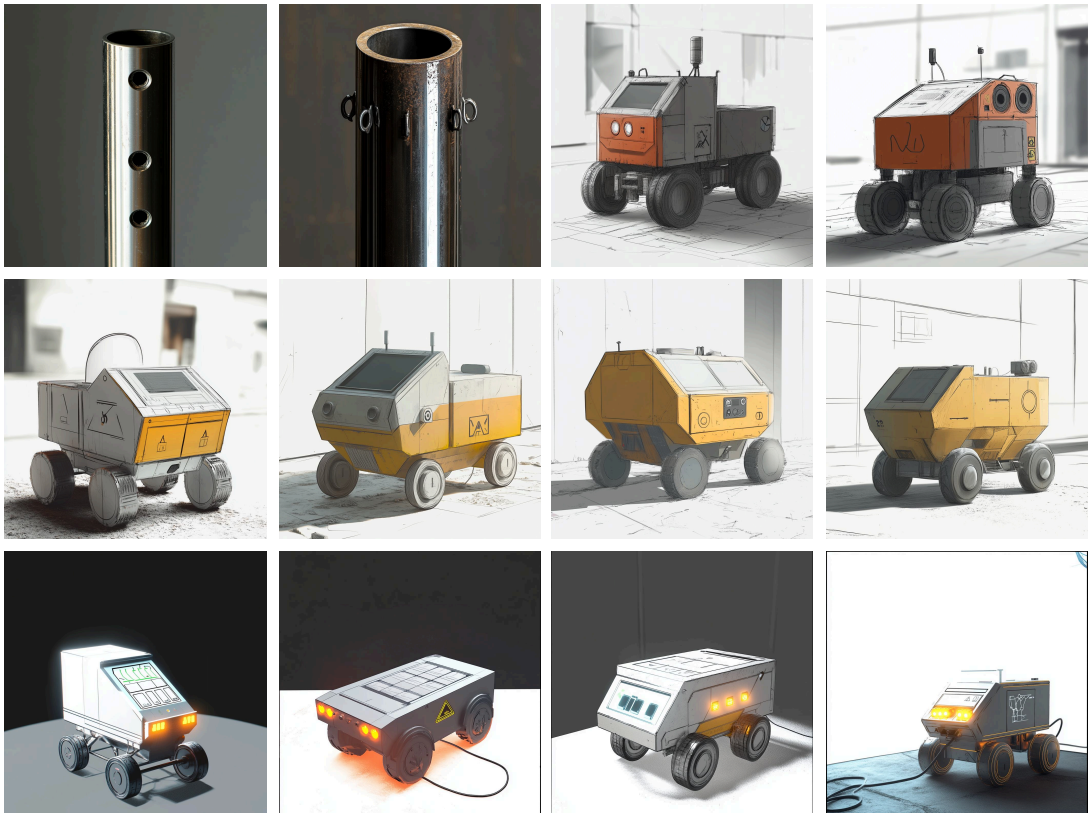

Concept 6: Safety Assistant

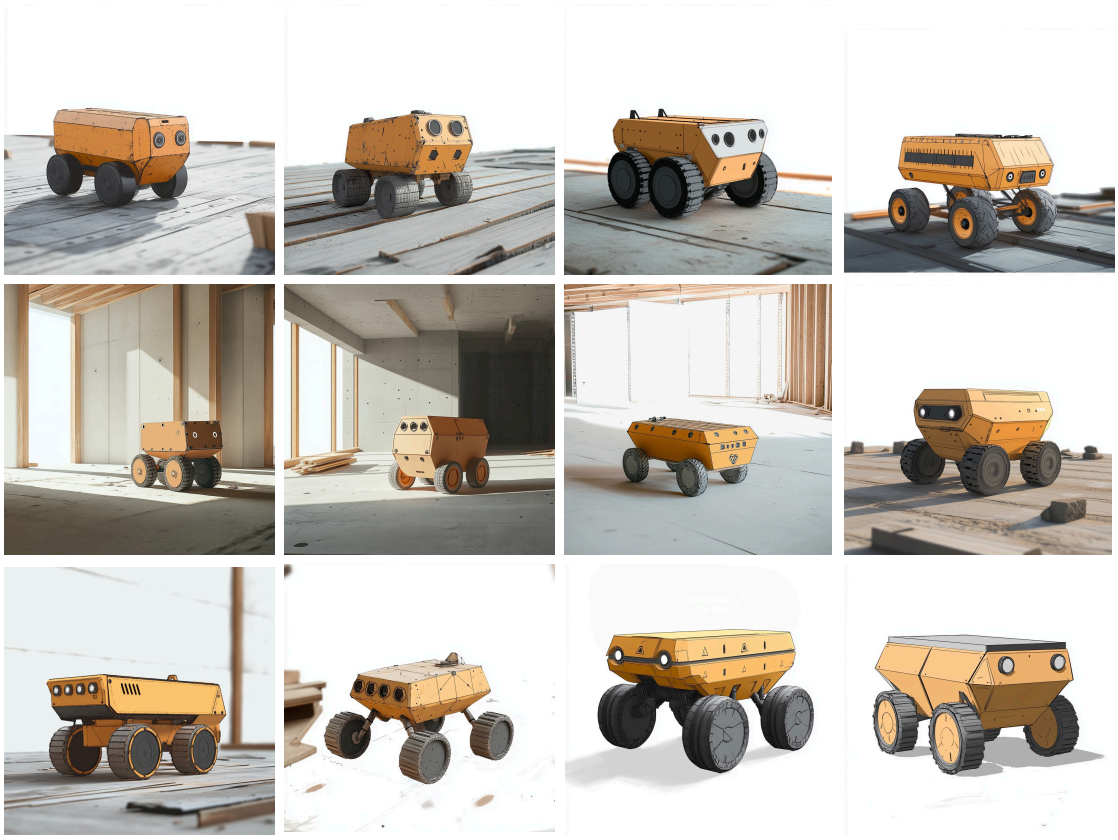

Concept 7: Digit








APPENDIX P. IDEATION

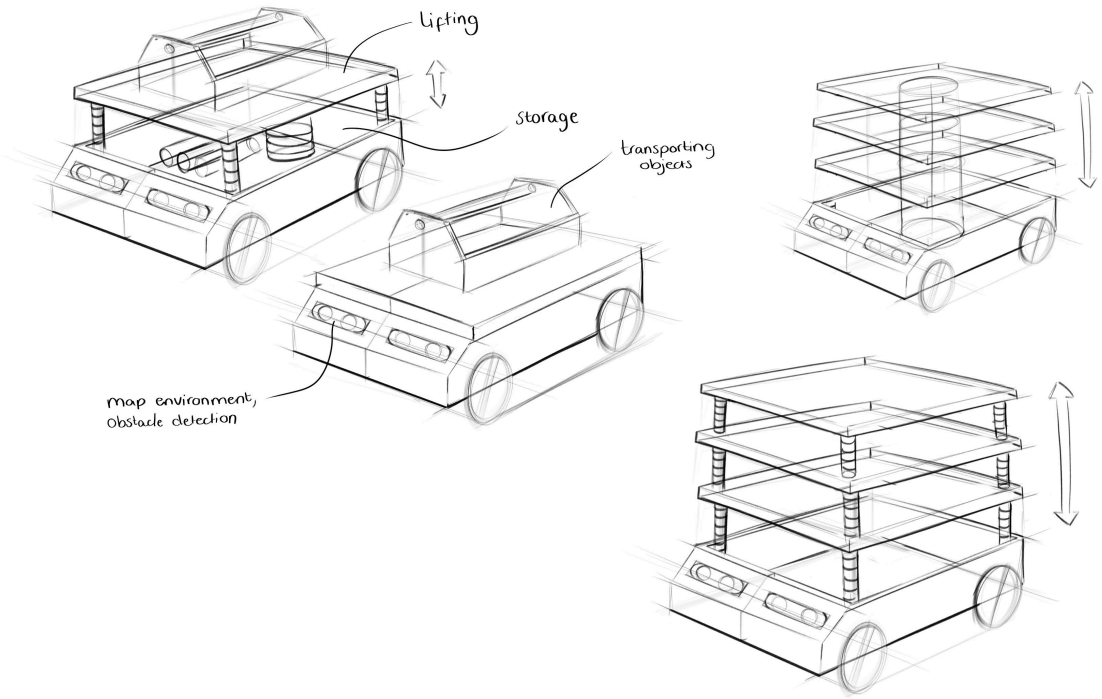

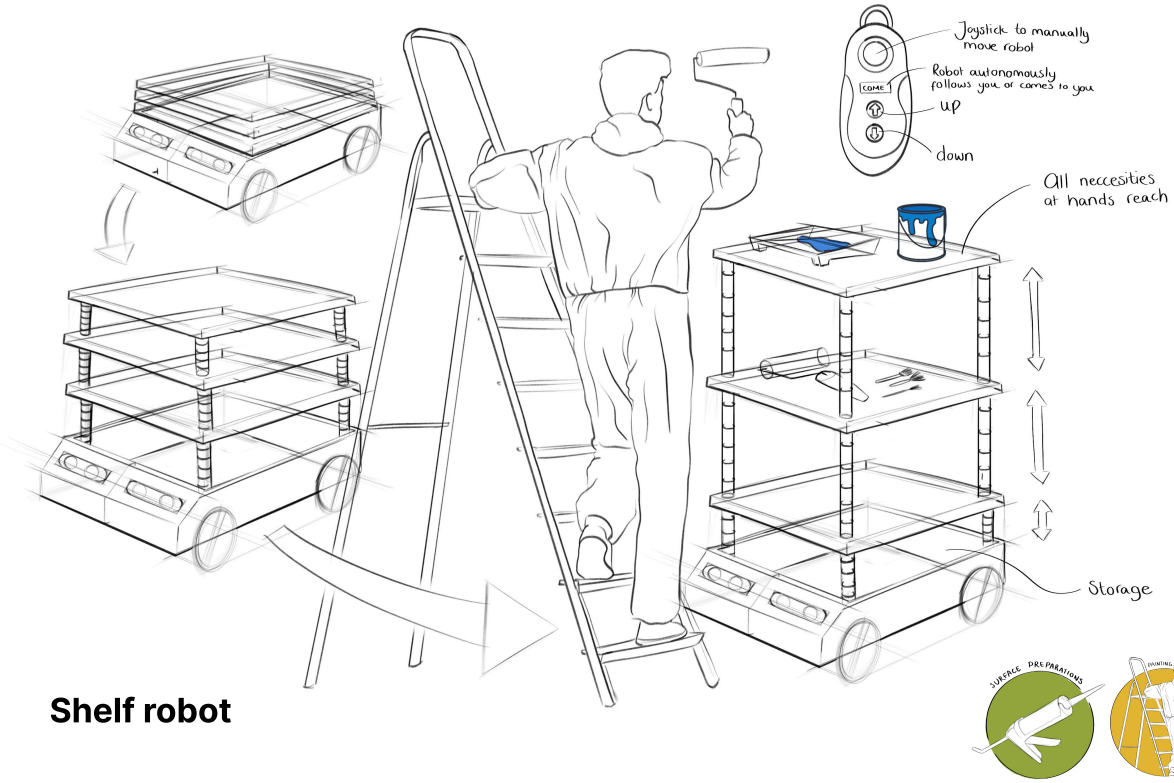

Shelf robot

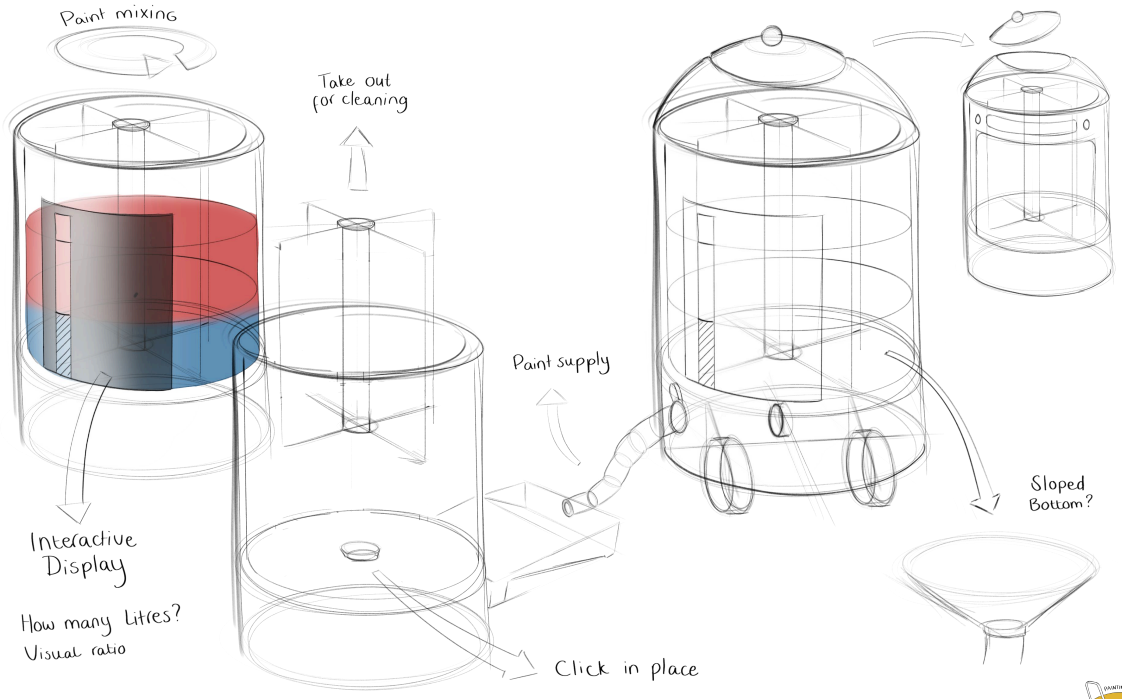

Paint mixer robot



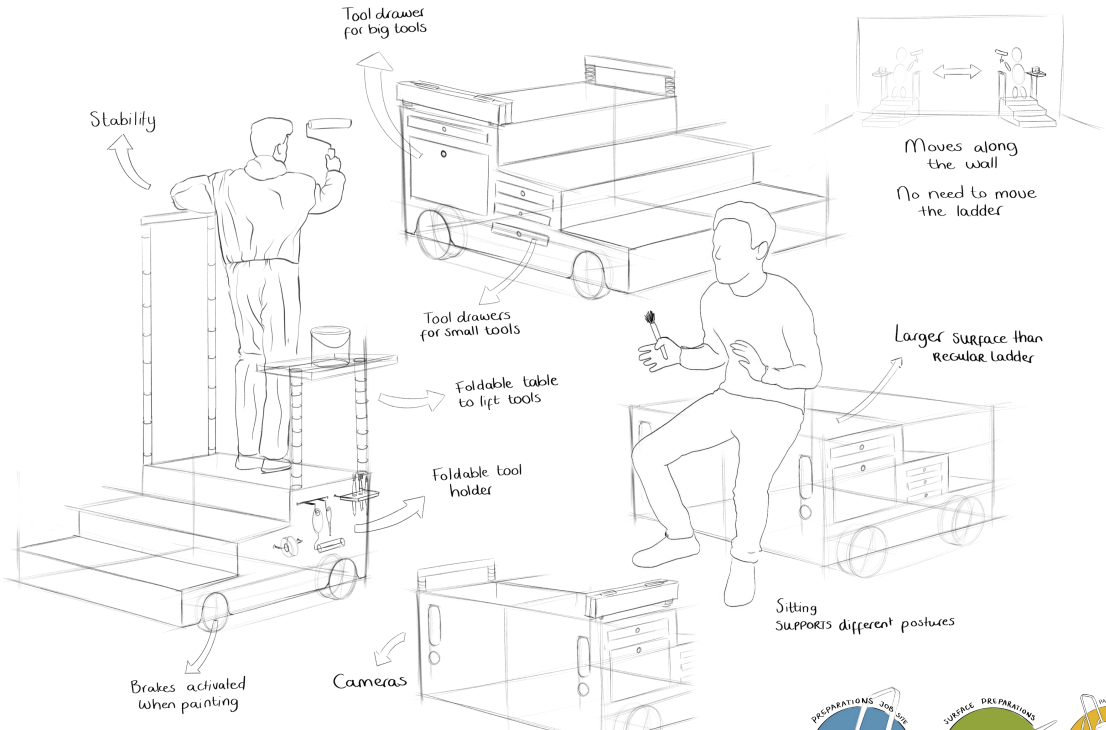

Ladder robot



Cleaning robot

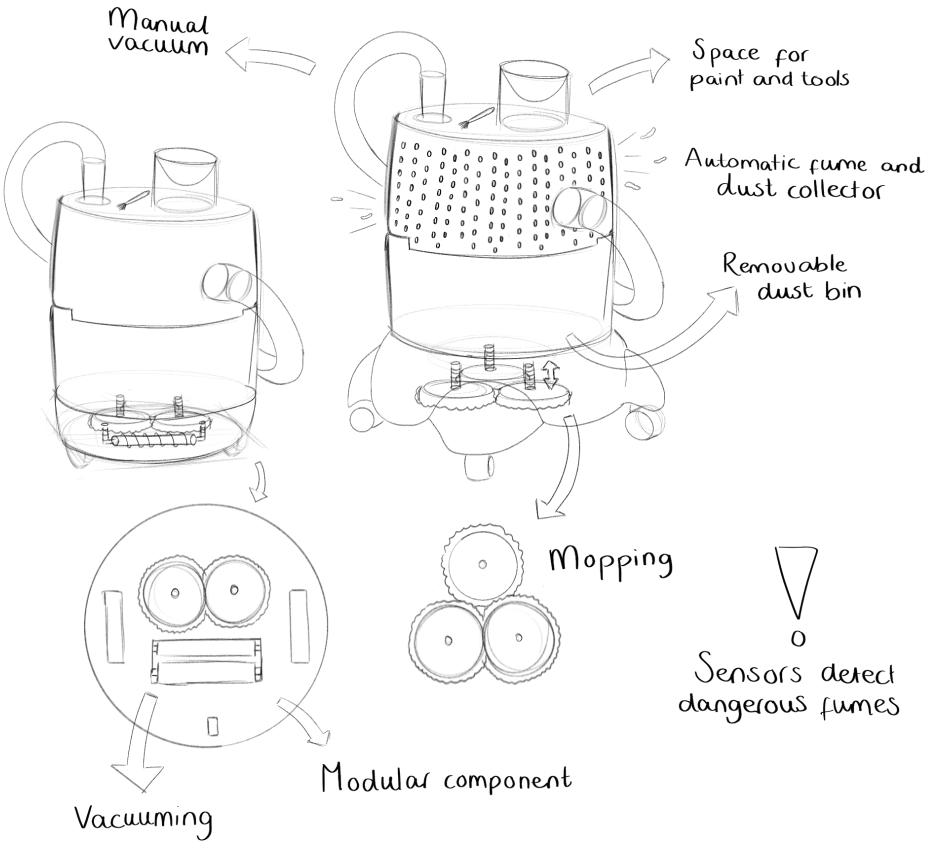



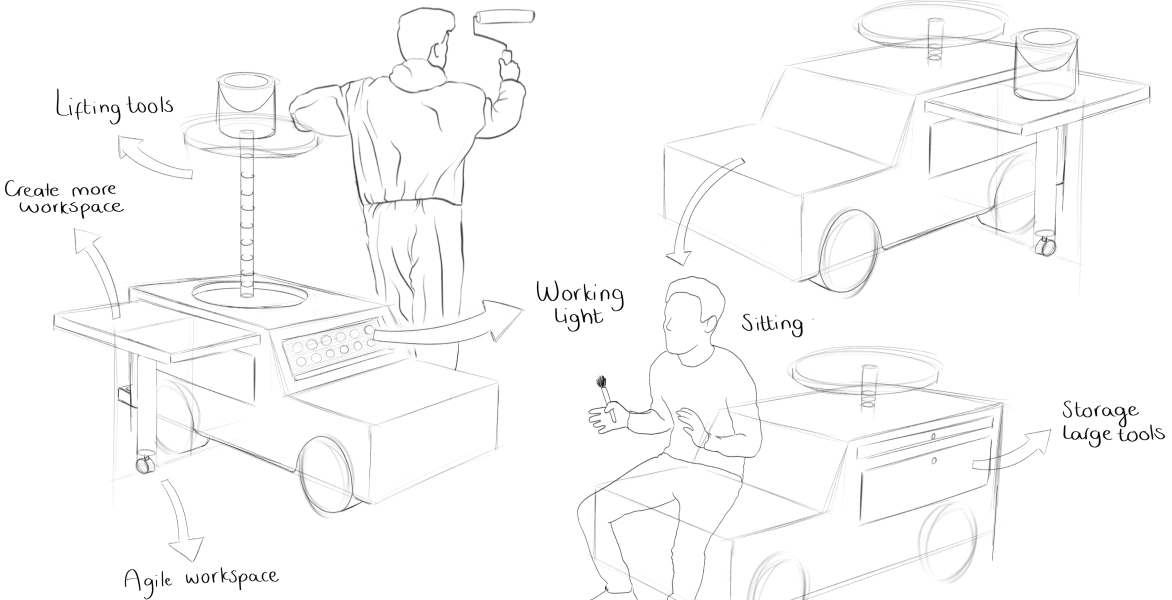



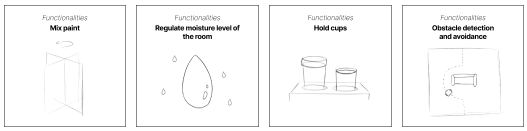
Functionalities
Mix paint
Functionalities
Regulate moisture level of the room
Functionalities
Hold cups
Functionalities
Obstacle detection and avoidance

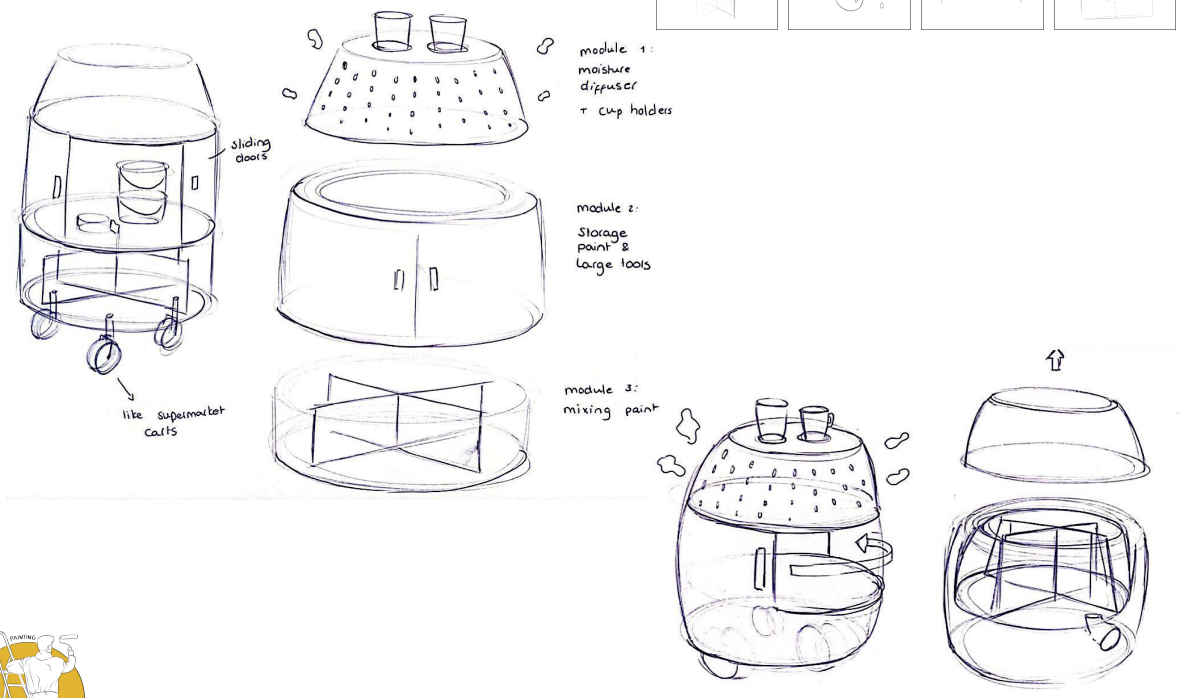
sliding doors
like supermarket carts
module 1:
moisture diffuser
+ cup holders
module 2:
Storage paint & large tools
module 3:
mixing paint


PAINTING

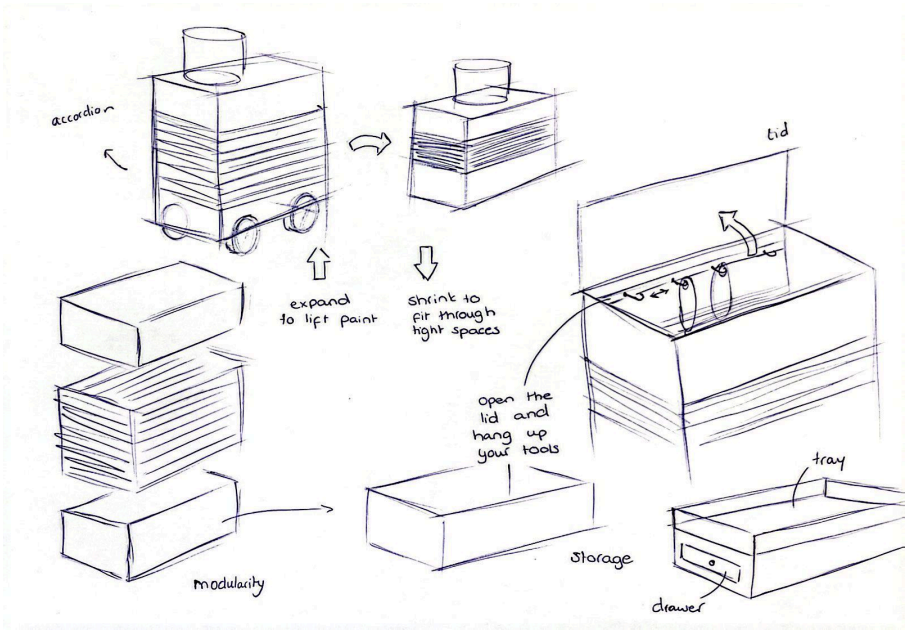
accordion
expand to lift paint
shrink to fit through tight spaces
lid
open the lid and hang up your tools
tray
storage
drawer
modularity

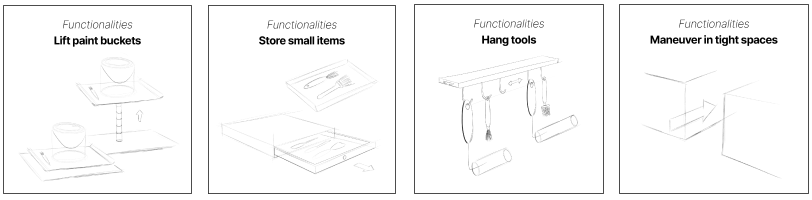
Functionalities
Lift paint buckets
Functionalities
Store small items
Functionalities
Hang tools
Functionalities
Maneuver in tight spaces

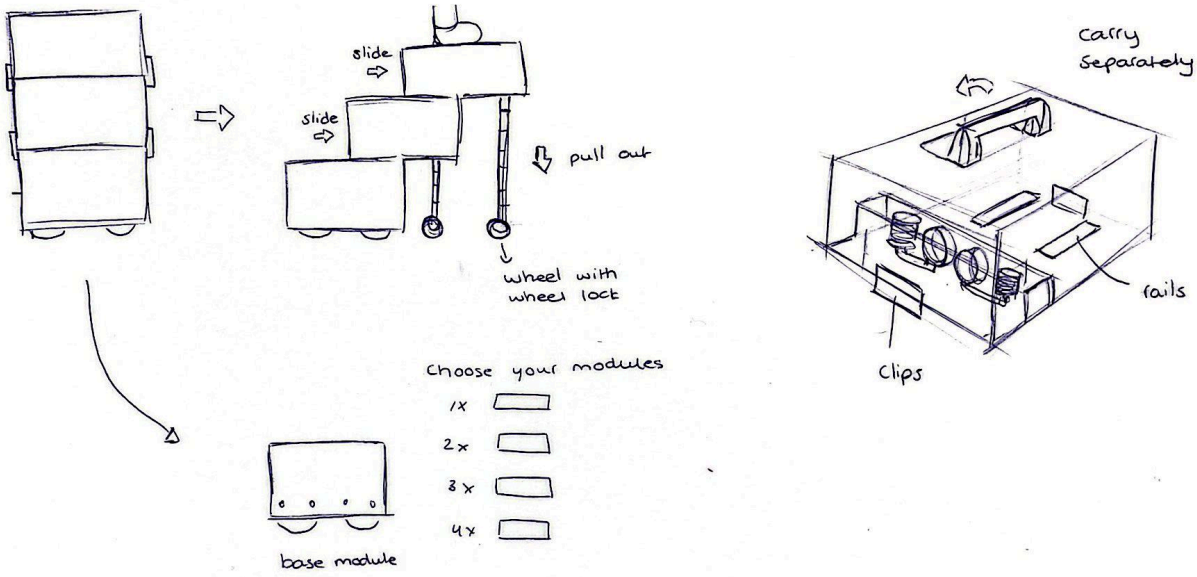
slide
slide
pull out
wheel with wheel lock
Carry Separately
rails
Clips
Choose your modules
1x
2x
3x
4x
base module

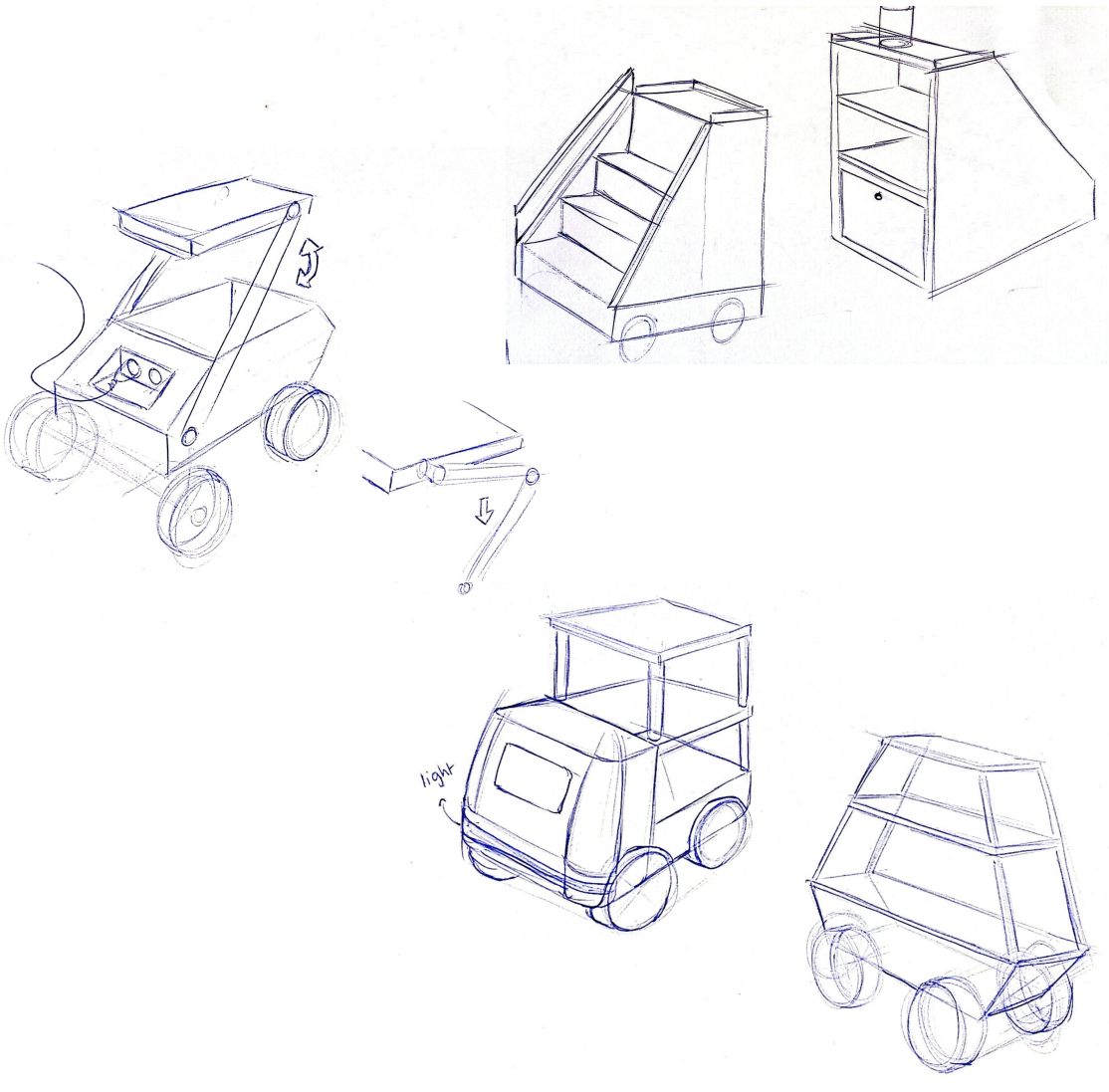
light

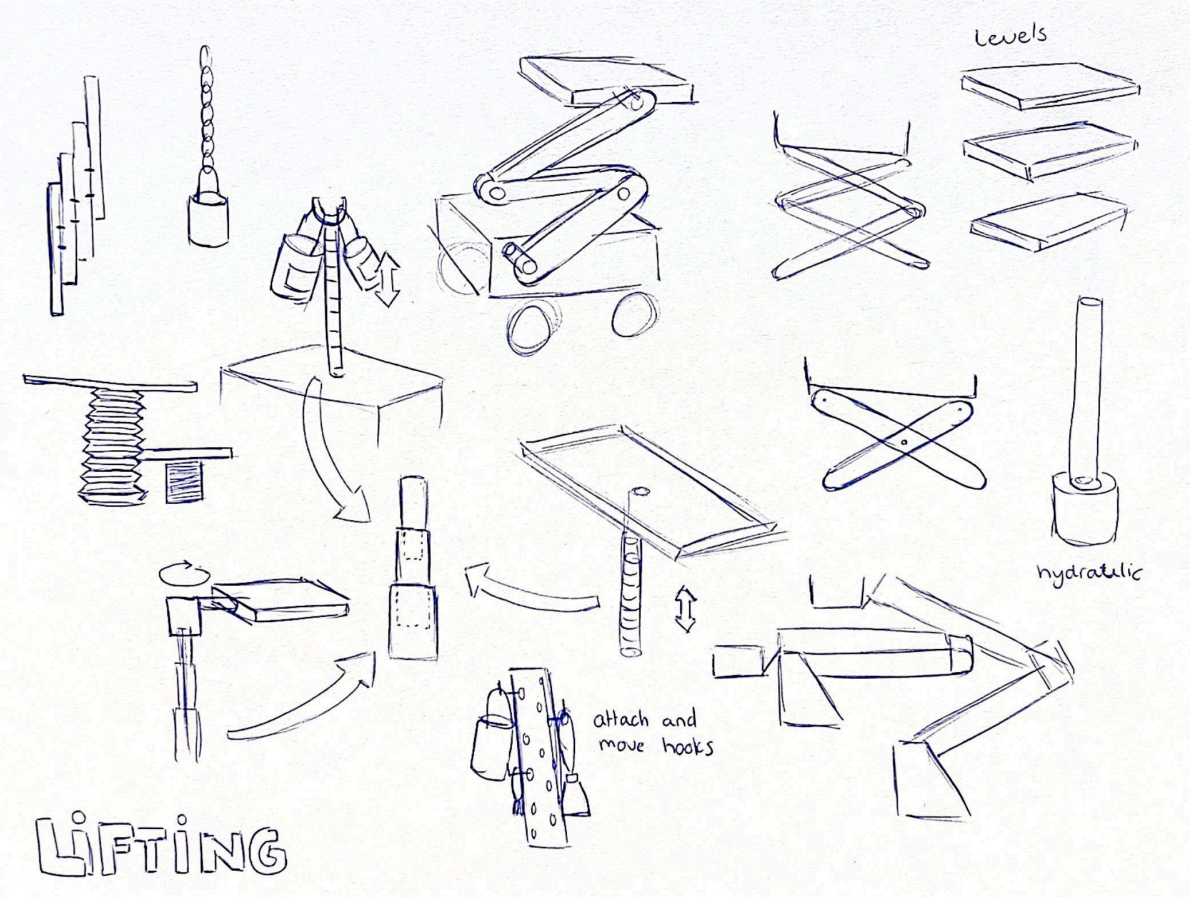
Levels
hydraulic
attach and
move hooks
LIFTING

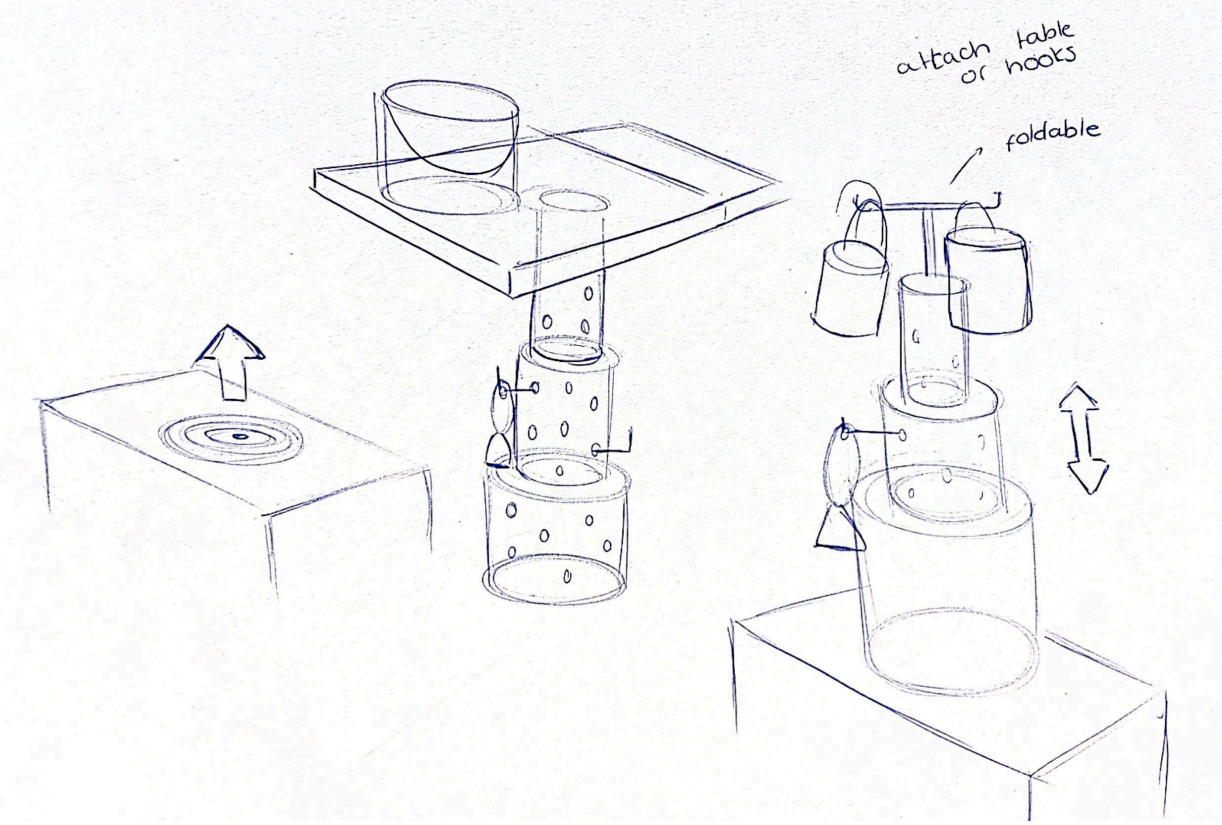
attach table
or hooks
foldable

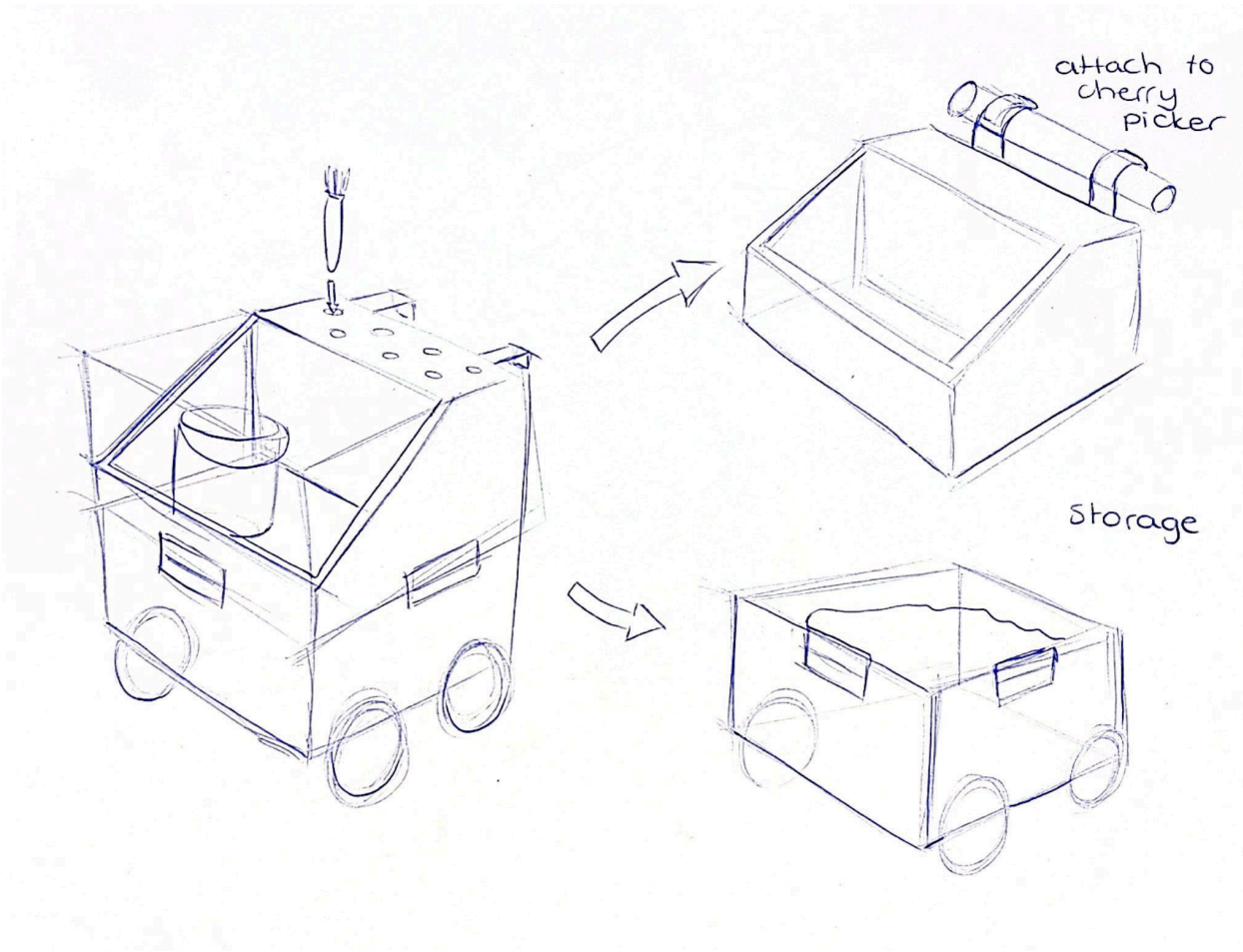
attach to
cherry
picker
storage

APPENDIX Q. EXPLORATION DESIGN DIRECTION

This concept has a detachable part that can be brought onto the scaffolding. Large materials can be stacked onto the robot cart, but you can also transform the backside by putting up the shelves. Adaptable for assisting in diverse situations.

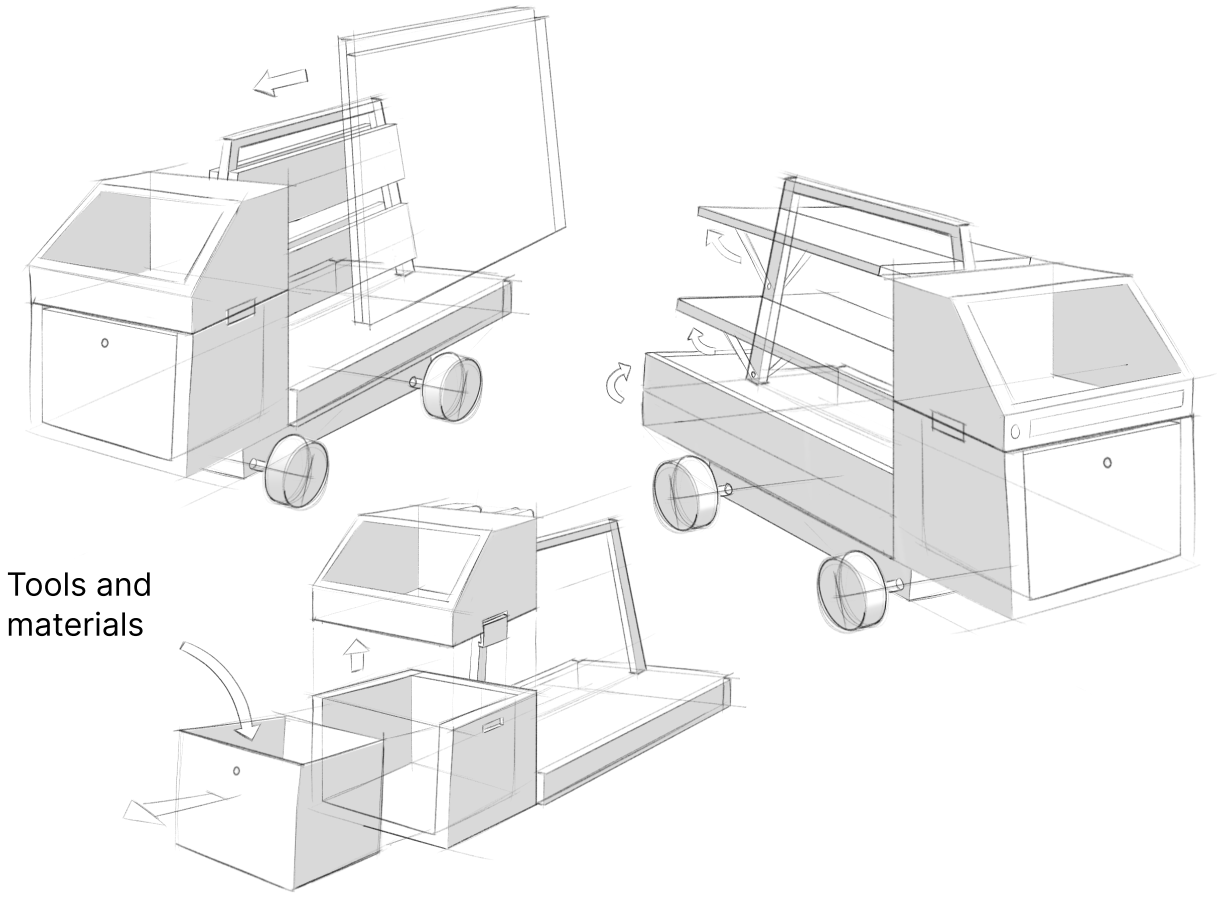

This scaffolding attachment has light strips on three sides, which can each be turned on individually so you can control where you want extra light.

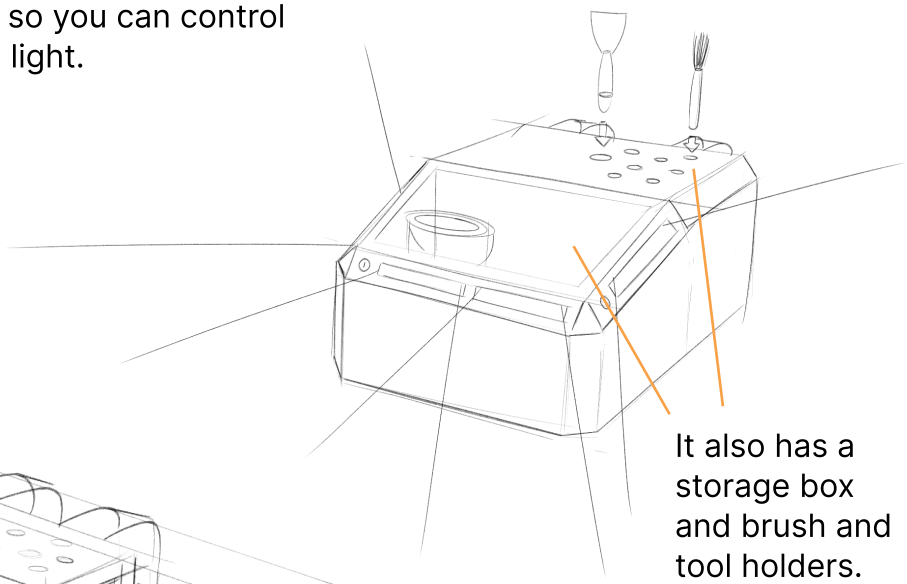

It also has a storage box and brush and tool holders.

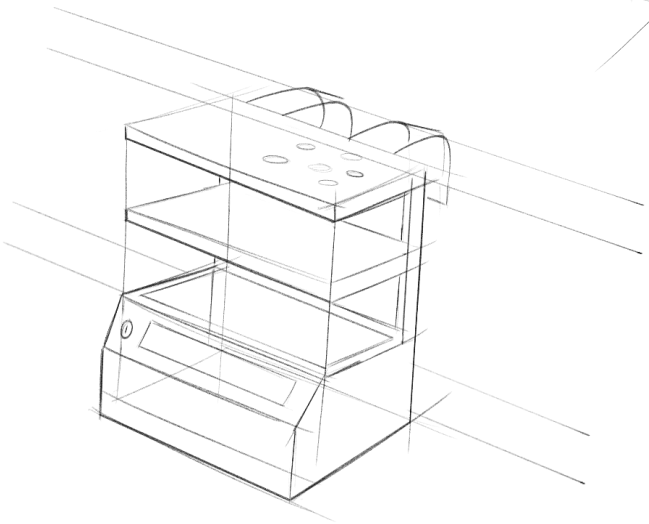

This scaffolding attachment has two shelves, a storage box, brush holders and light in the front. It's a bit longer, so it can rest against the scaffolding and it's more stable.

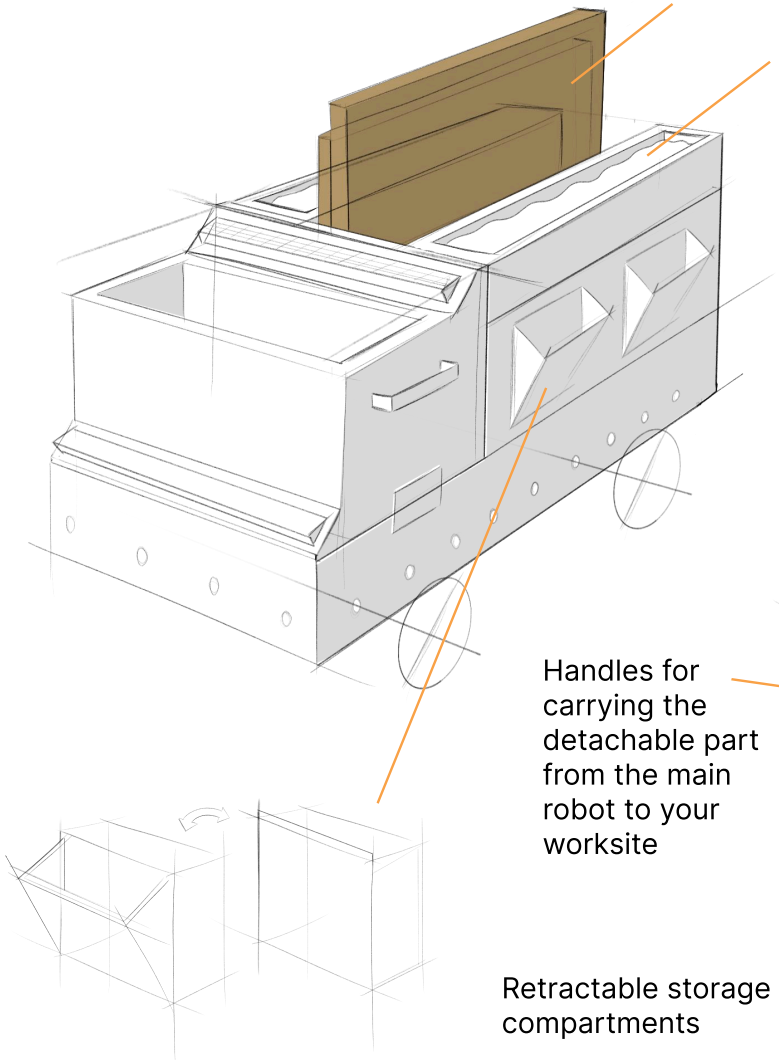

Store the large materials in the middle.

It also has a big storage box

Handles for carrying the detachable part from the main robot to your worksite

Retractable storage compartments

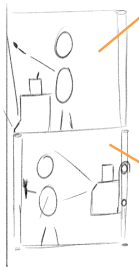

Stands beside you to light up surface and to put on your tools. Could stand in the way of the surface.

Hangs on the scaffolding, not in your way. But aiming the light can be more tricky.

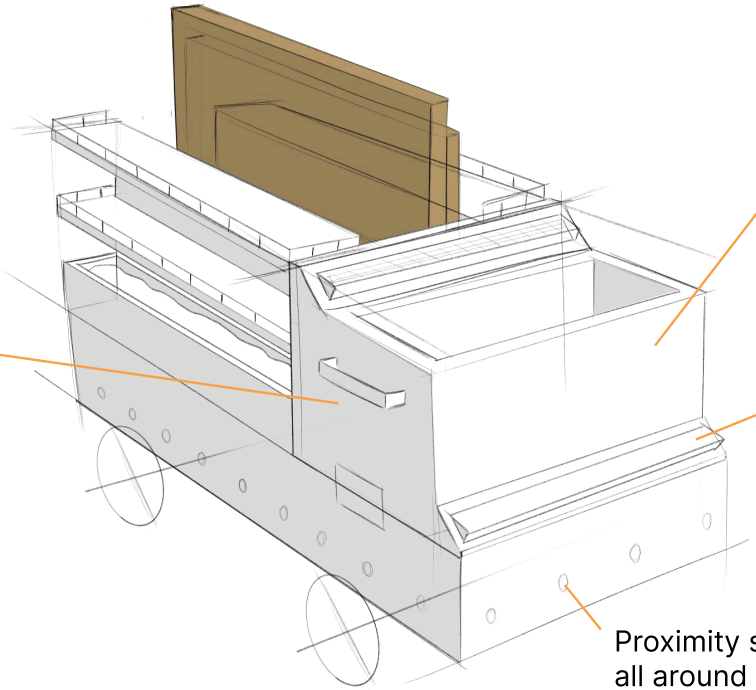

Detachable scaffolding attachment

Change angle of construction light

Proximity sensors all around

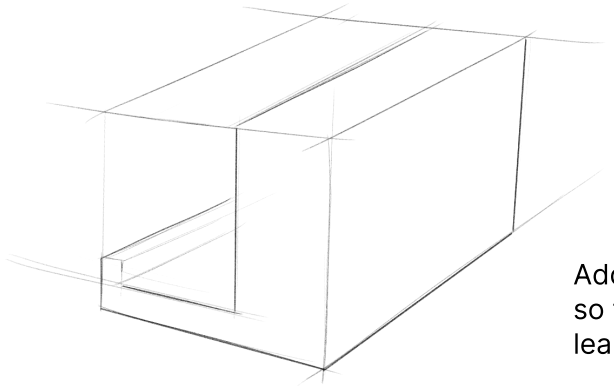

Add sloping surface
so the materials can
lean on it

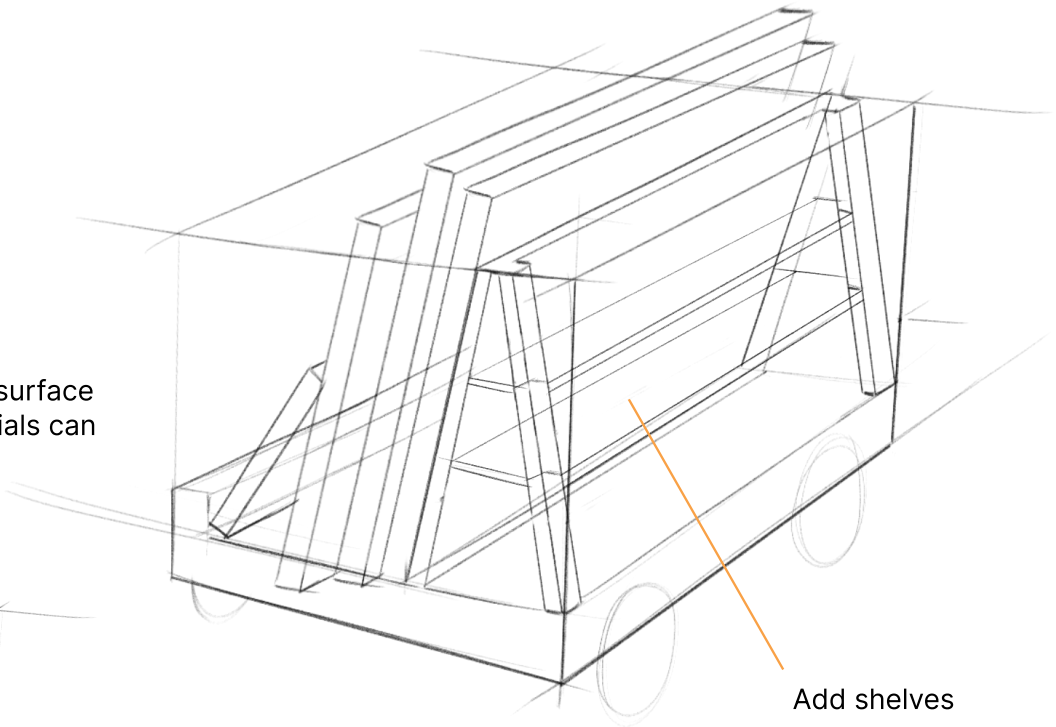

Add shelves

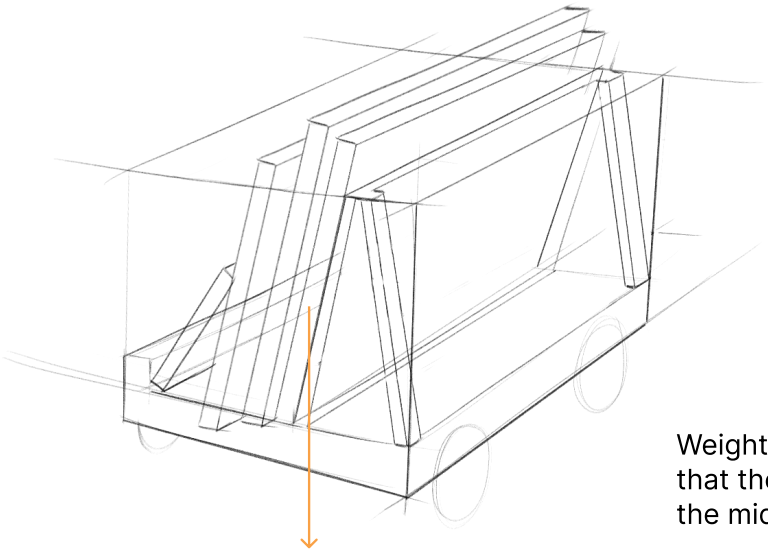

Reduced materials
of the cart

Weight distributed in such a way
that the centre of gravity is in
the middle of the robot cart

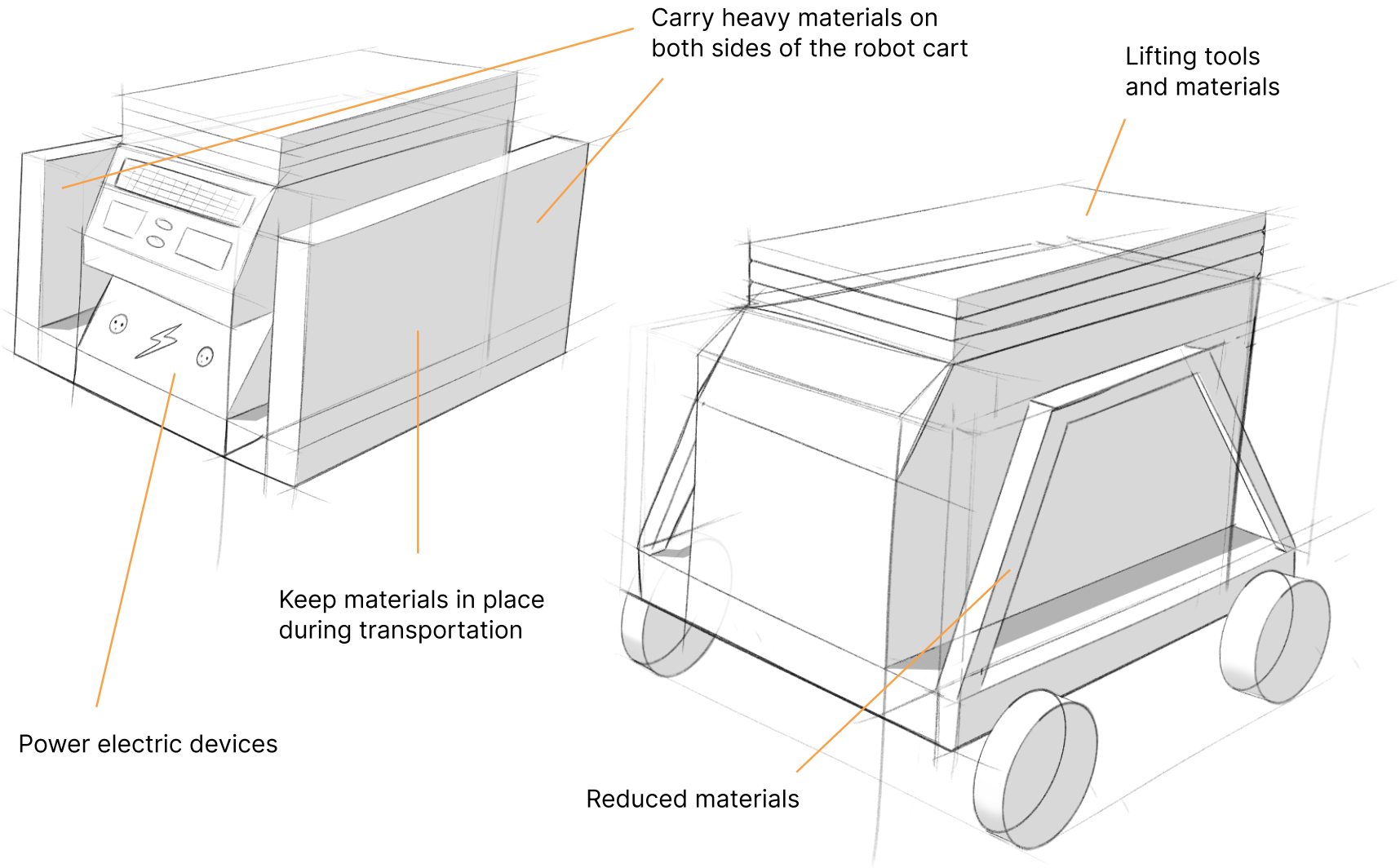
Carry heavy materials on
both sides of the robot cart
Lifting tools
and materials
Keep materials in place
during transportation
Power electric devices
Reduced materials

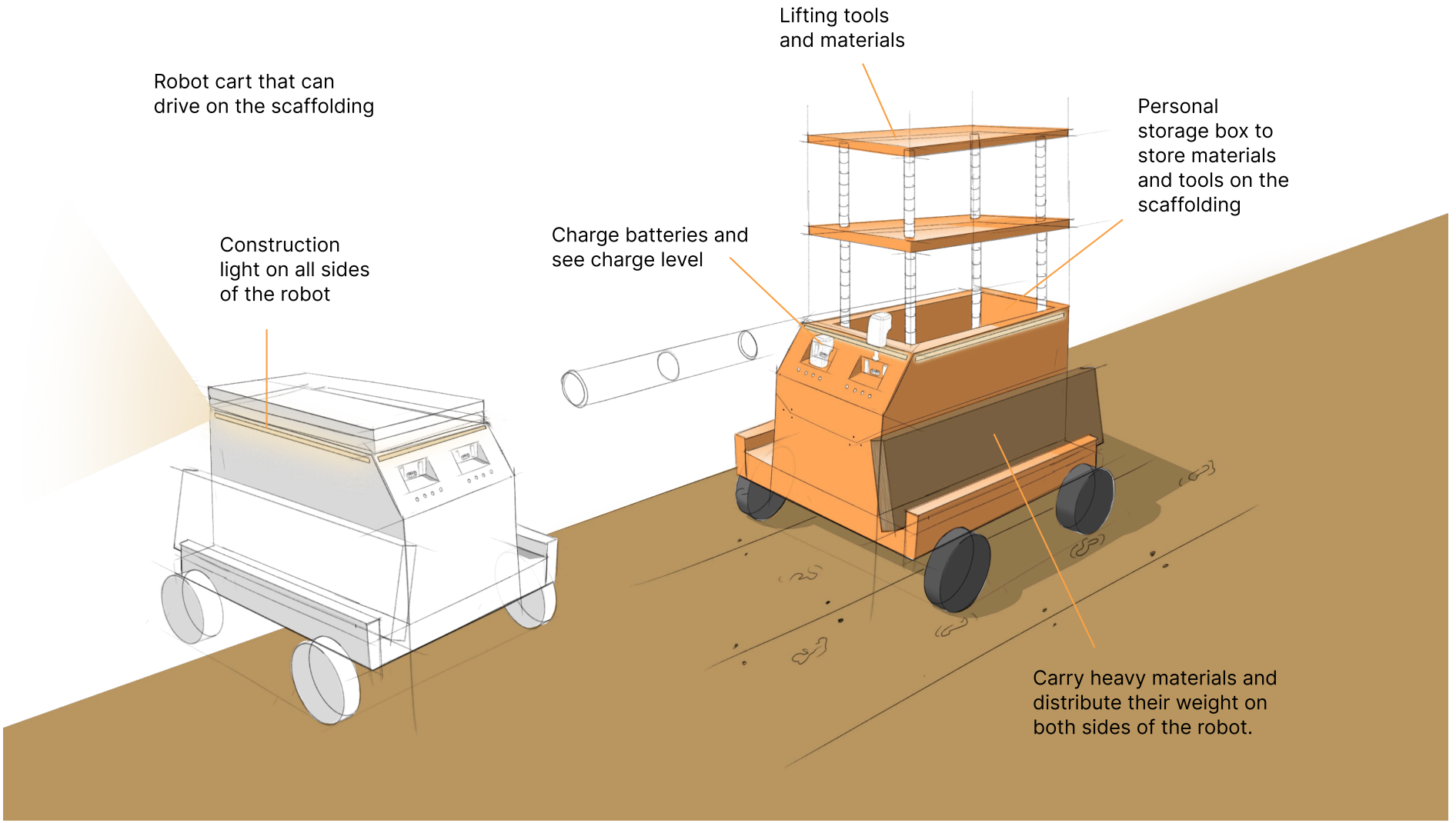
Lifting tools
and materials
Robot cart that can
drive on the scaffolding
Personal
storage box to
store materials
and tools on the
scaffolding
Construction
light on all sides
of the robot
Charge batteries and
see charge level
Carry heavy materials and
distribute their weight on
both sides of the robot.

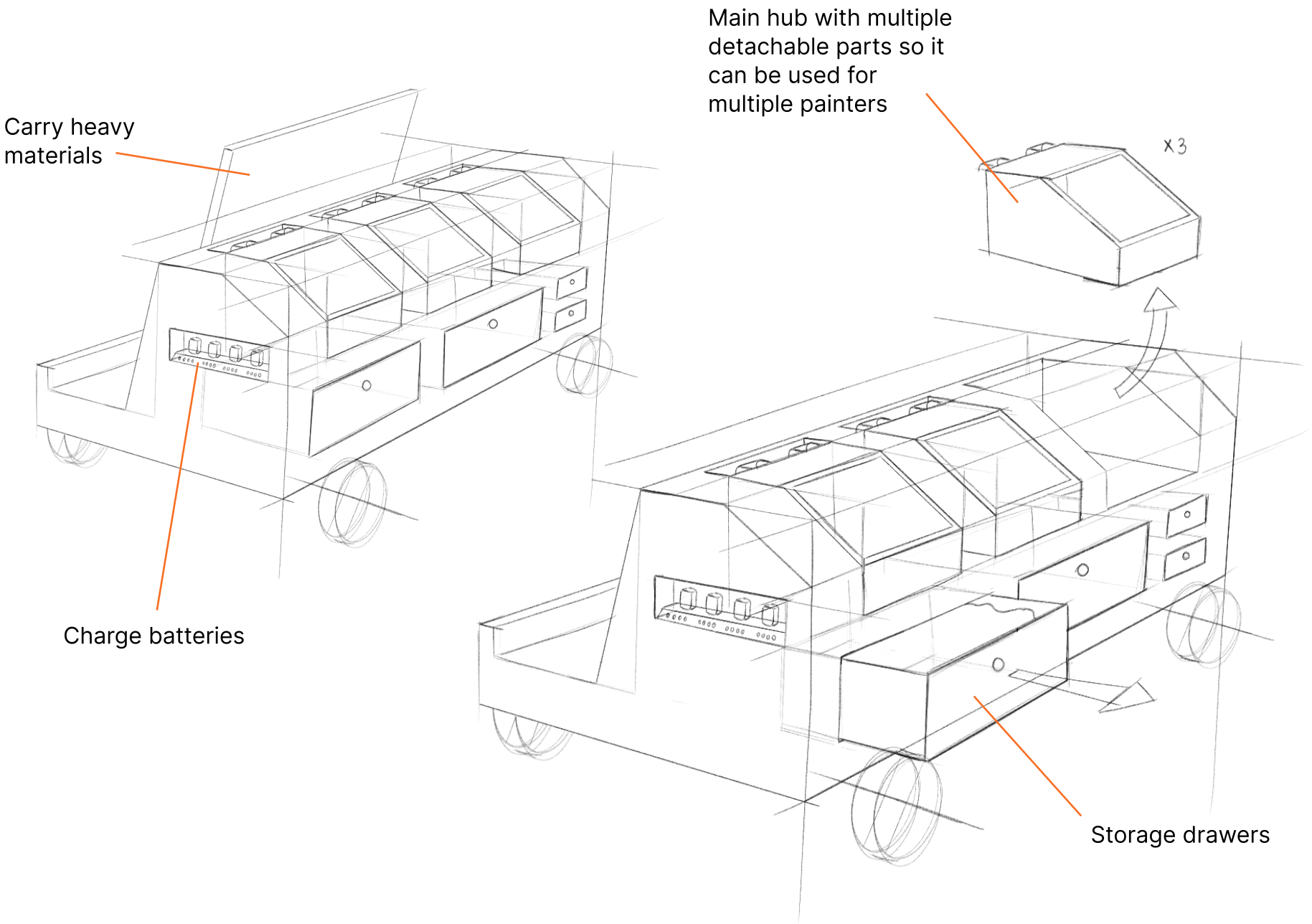
Carry heavy materials
Charge batteries
Main hub with multiple detachable parts so it can be used for multiple painters
x3
Storage drawers

Designing the way to carry heavy materials

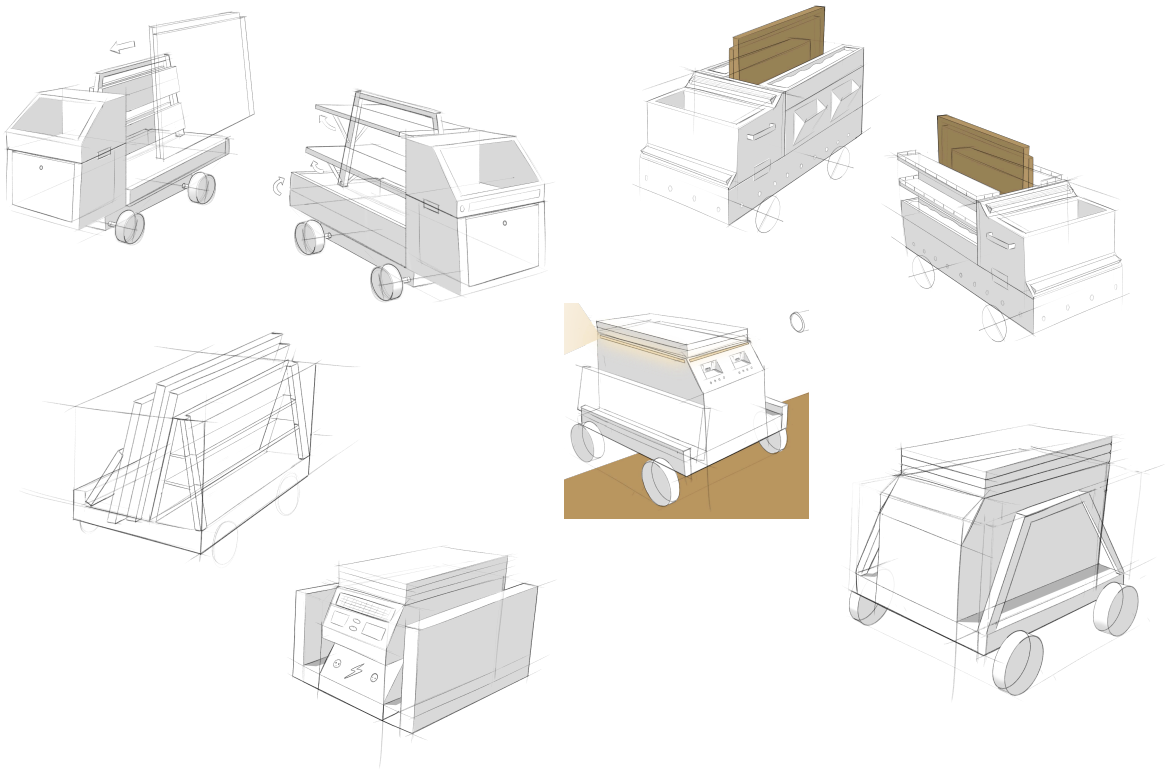

Designing the detachable workspace

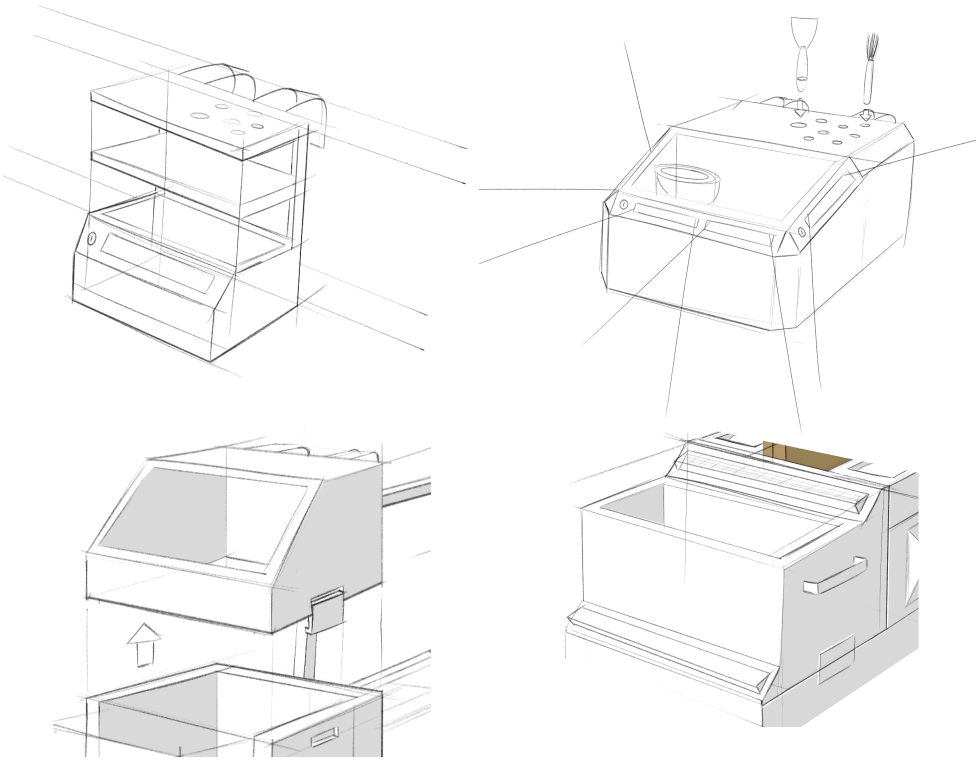

Robot with one detachable workspace

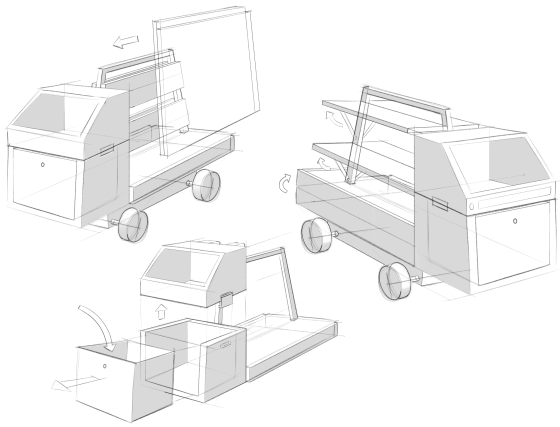

Main hub with multiple detachable workspaces

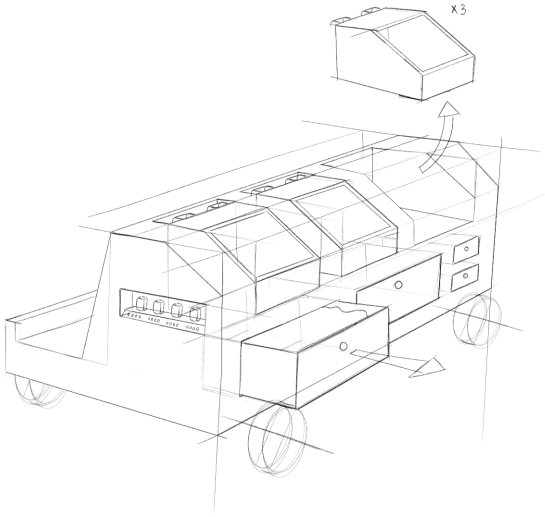

Robot with lifting mechanism driving on scaffolding

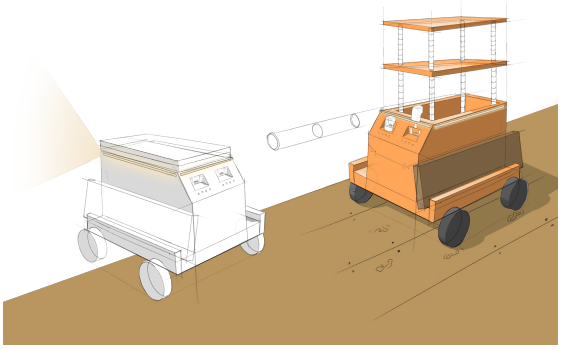

Robot with lifting mechanism driving on scaffolding

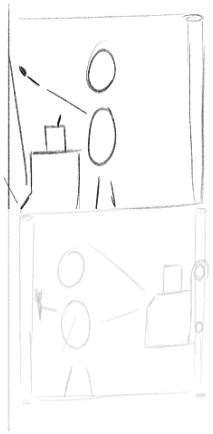

Stands beside you to light up surface and to store and organise your tools

Light in three directions

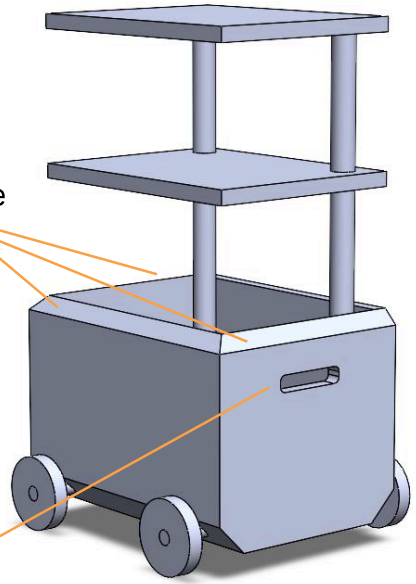

Handles for lifting it over obstacles it cannot overcome

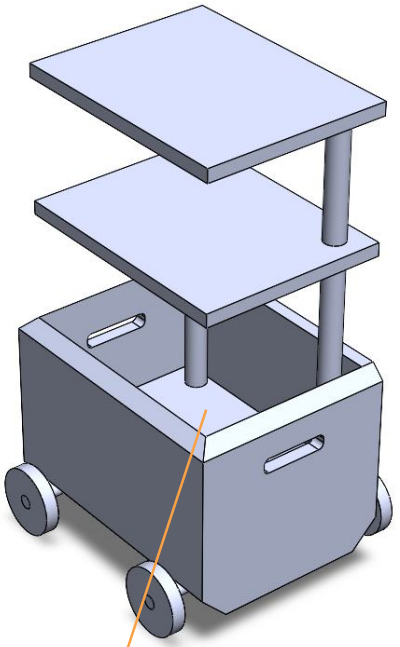

Personal storage box to store materials and tools on the scaffolding

Lifting mechanism

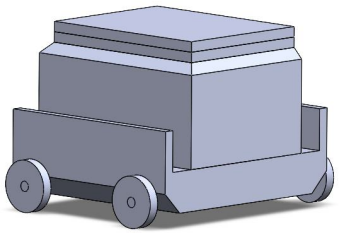

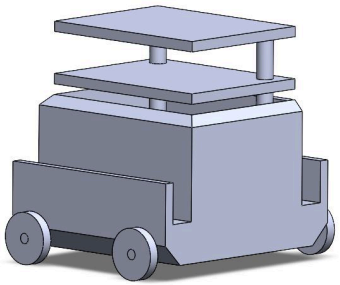

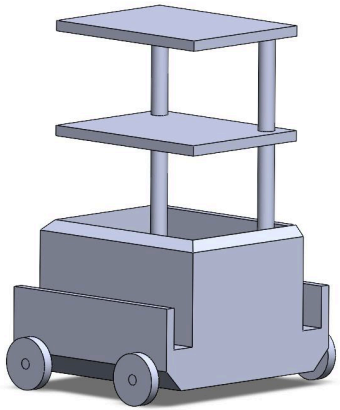

Robot with lifting mechanism driving on scaffolding

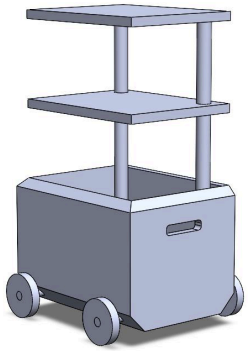

No barrier
You can only store materials inside the robot

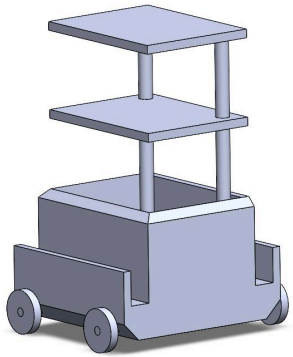

Low barrier
You can carry heavy materials on both sides. They lean against the robot and are held in place with a low barrier.

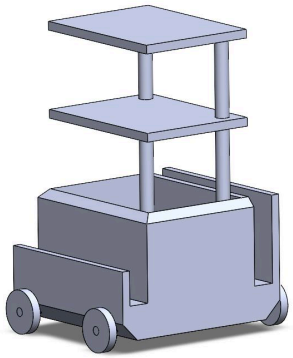

One low and one high barrier
Suitable for smaller and bigger heavy materials

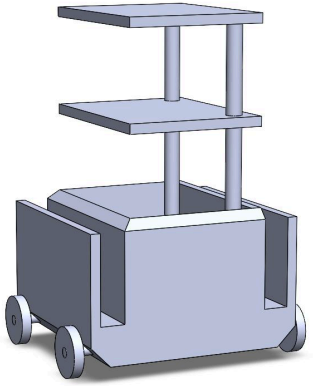

High barrier
The high barrier keeps the heavy materials more in place

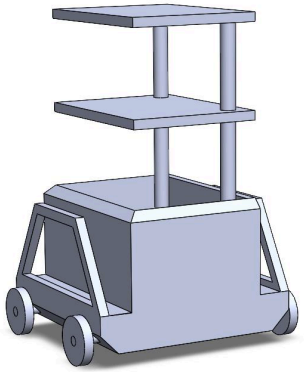

High frame
Saves materials

Main hub with multiple detachable workspaces

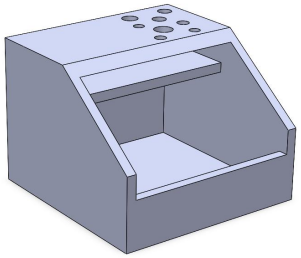

Multiple detachable modules

x3

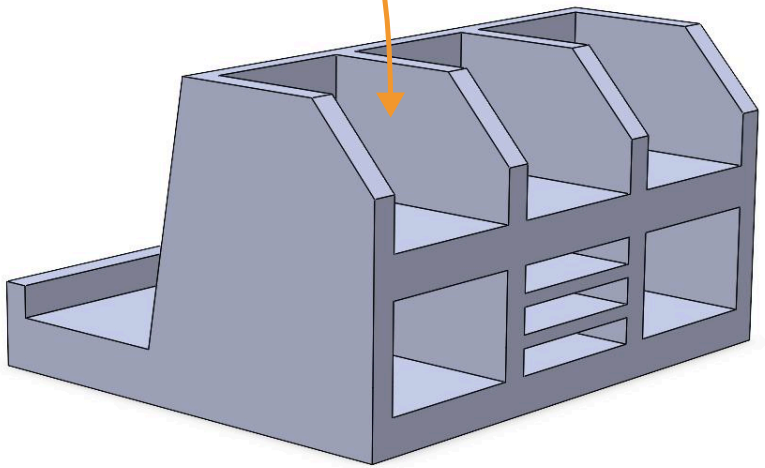

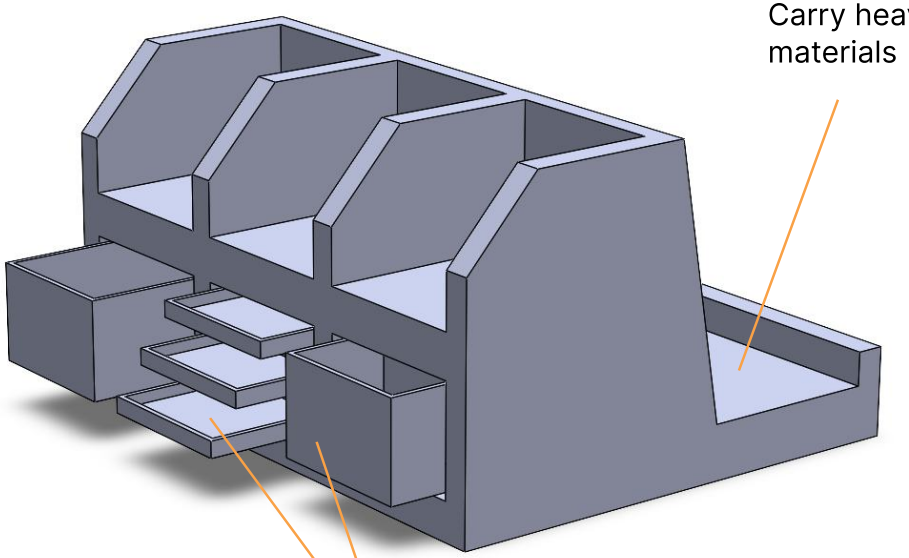

Carry heavy materials

Storage drawers

Bring your own detachable workspace and attach it to the scaffolding

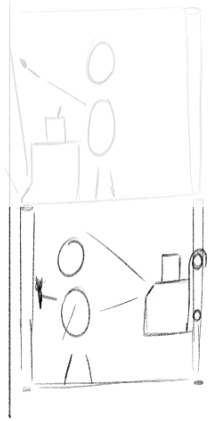

Main hub with multiple detachable workspaces

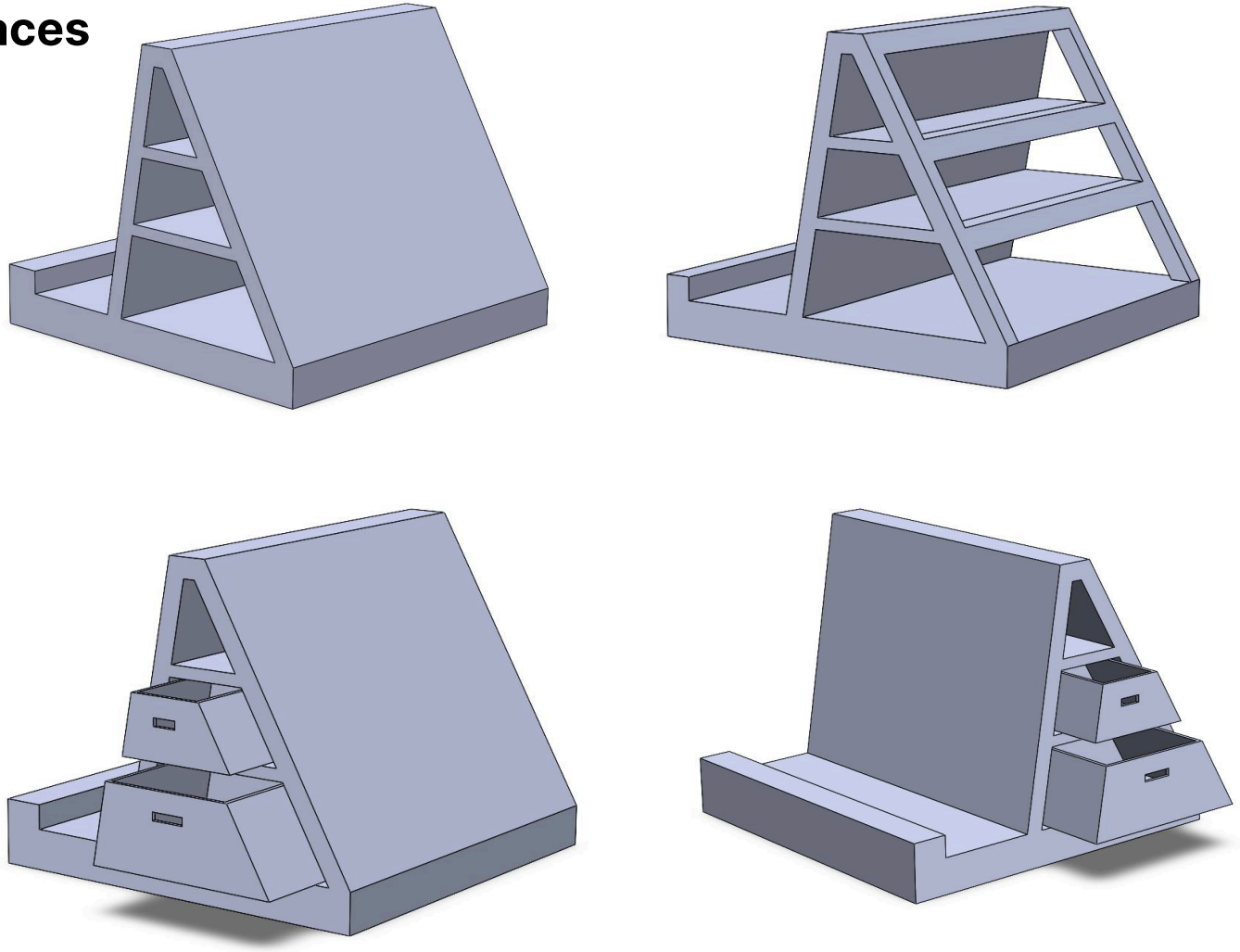

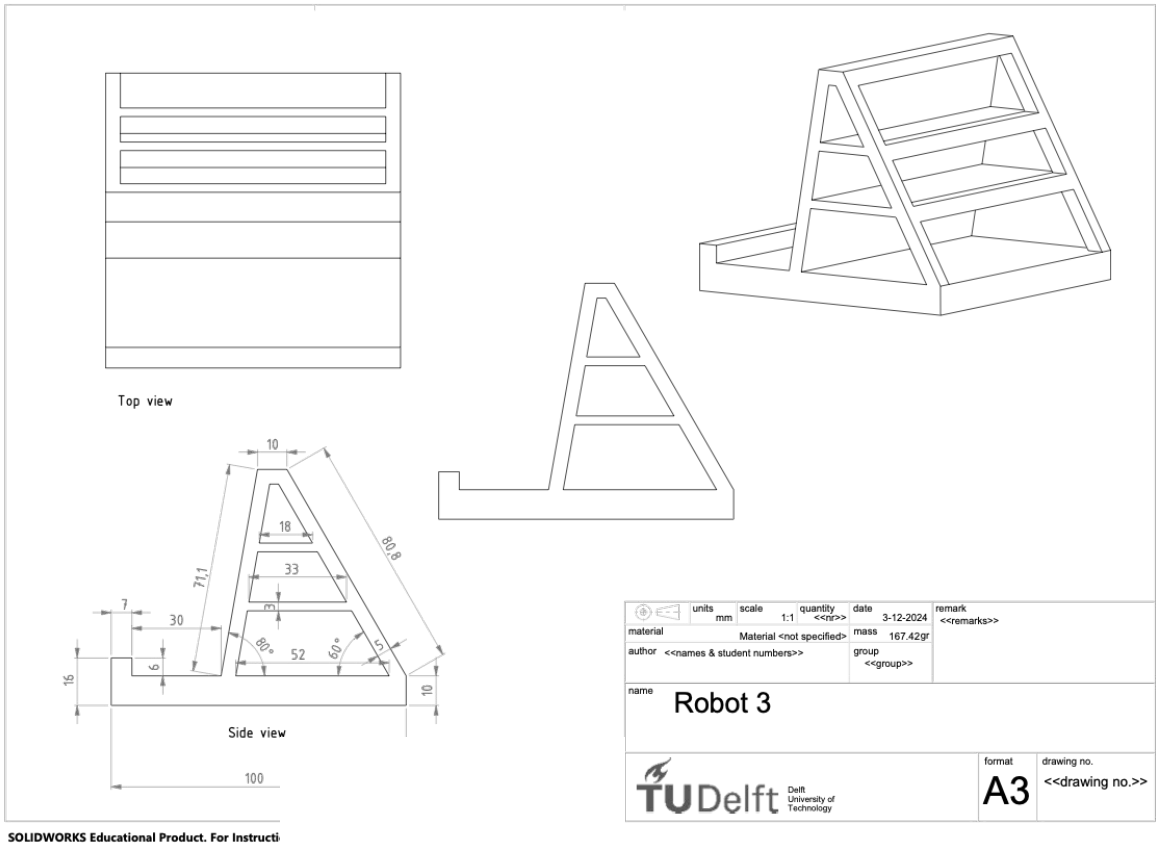
Top view
Side view
10
18
33
3
71,1
80,8
7
30
6
16
80°
52
60°
5
10
100
units mm
scale 1:1
quantity <<nr>>
date 3-12-2024
remark <<remarks>>
material Material <not specified>
mass 167.42gr
author <<names & student numbers>>
group <<group>>
name Robot 3
TU Delft Delft University of Technology
format A3
drawing no. <<drawing no.>>
SOLIDWORKS Educational Product. For Instructi

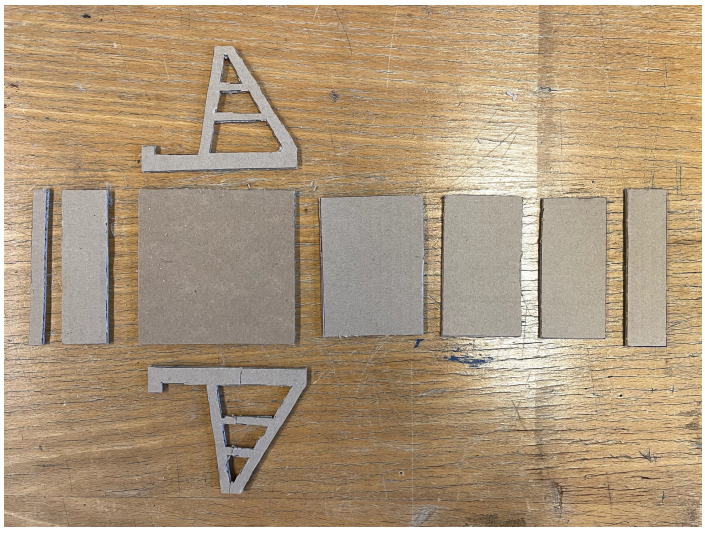





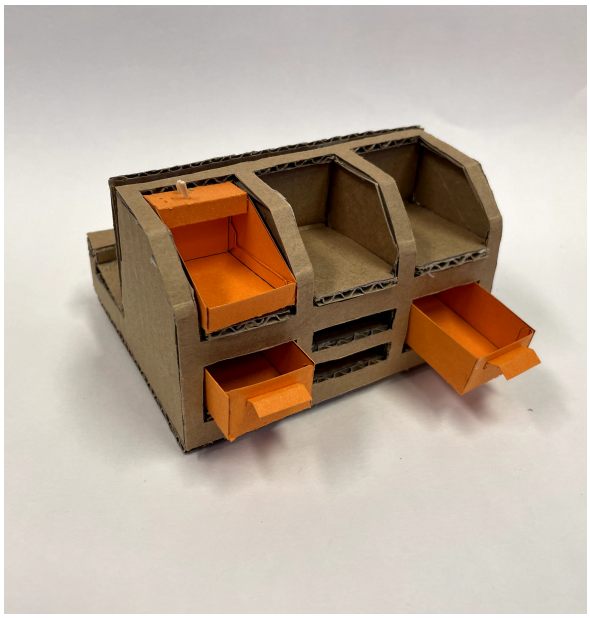



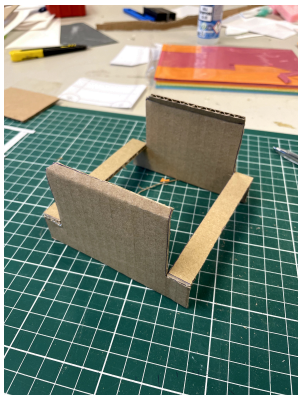



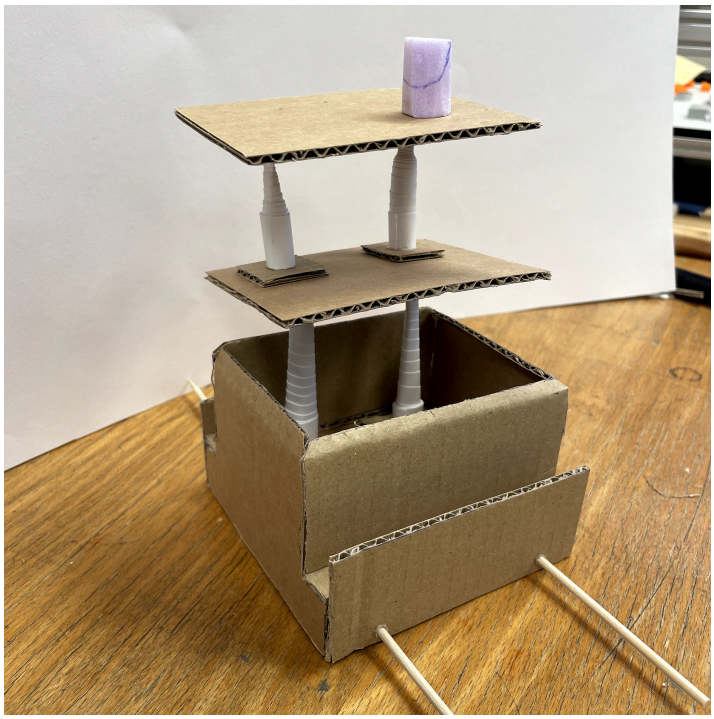

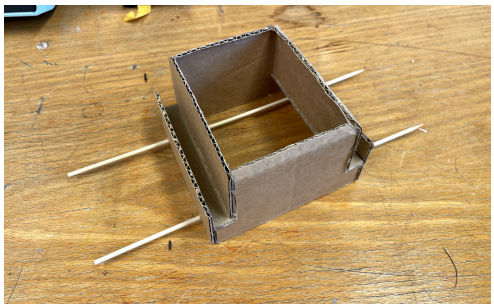

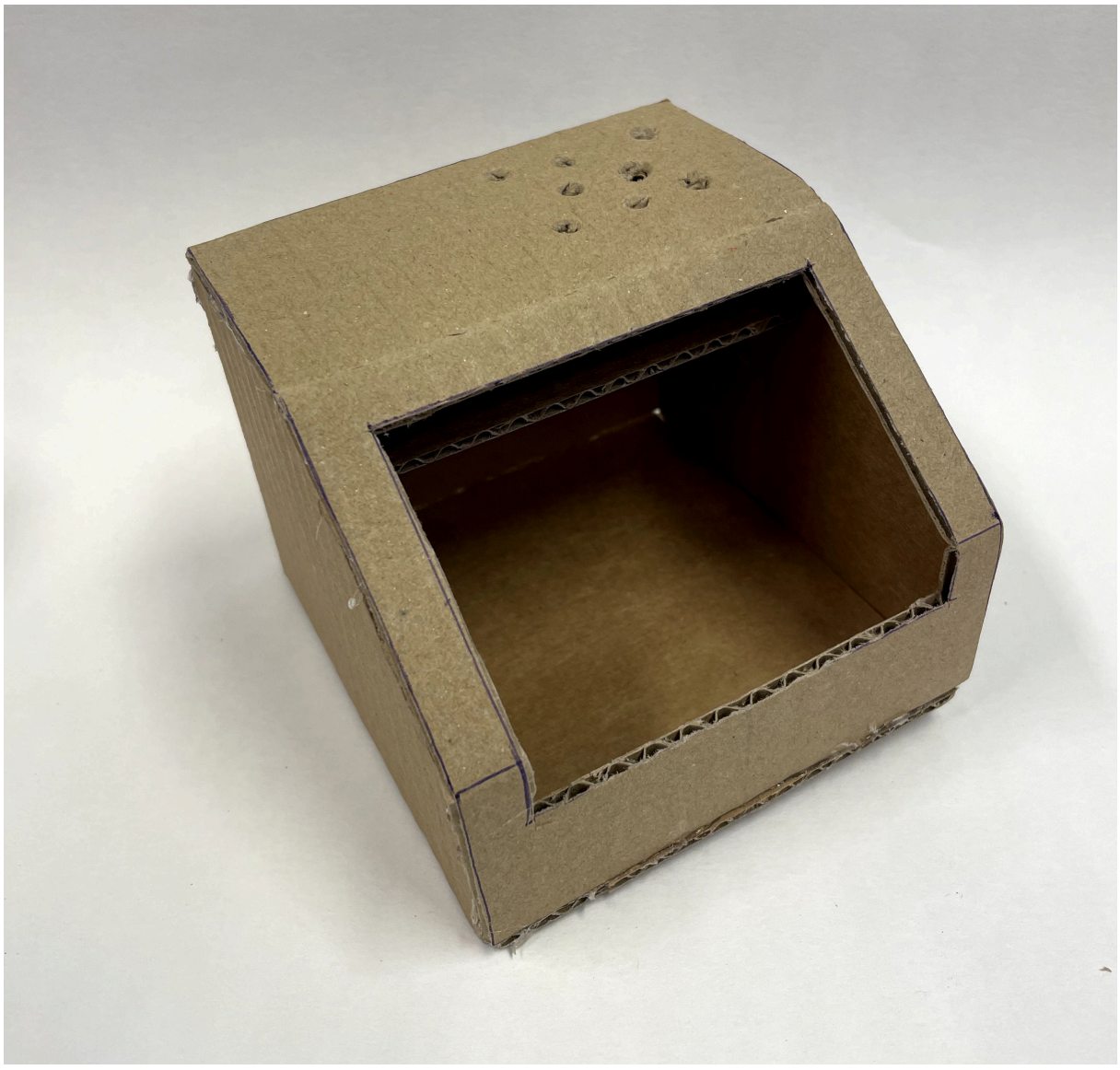

APPENDIX R. CO-CREATION: BRIEFING

Thank you for participating in this study. Today, we'll be working together to explore how this robot assistant could help you in your daily work as a painter. The robot is still in its prototype phase, so it's not perfect yet. Our goal is to learn from you how we can make it as useful and intuitive as possible.
Since we'll be collecting some data during this session, I'll first ask you to read and sign a consent form. This ensures that you're informed about the study, understand how we'll handle your input, and agree to participate.
It mainly explains the way we deal with the collected data. For this study, we will record audio to capture your feedback and interactions with the robot. This will help us analyse the study afterward. We will also take a few photos or videos to document how you interact with the robot, but we'll try to avoid capturing your face, and any identifiable details will be blurred. All data will be anonymised and securely stored, and the recordings will only be used for transcription purposes before being deleted.

[Consent forms]

During this session, we'll first give you an introduction of the robot and its functionalities. After that, we go through 4 scenarios where you and the robot work together. In each scenario, I will first tell you the purpose I designed for the robot. During the experiment you'll have the freedom to tell us what you'd like the robot to do, how it should behave and you can show us how you would interact with the robot. Feel free to share any ideas, preferences, other purposes or suggestions as we go through the scenarios.

During the experiment, you will have full control over the behaviour of the robot. Just tell us out loud how you would like the robot to behave, and our research assistant can control the robot to act that way. He will also speak on behalf of the robot. You have multiple options to control the robot, for example for the lifting mechanism, you can use the screen, the physical buttons, give it a voice command or another method you prefer. During the experiment, you can use whatever method feels most intuitive for you.

There is no wrong way of interacting with the robot, and all input is valuable to us. Don't worry if something doesn't work perfectly we can pretend as if it works. Please try to think out loud and let us know your doubts, or things you find intuitive. You can always stop without giving any reason whatsoever.

[Demonstration of all the functionalities]

Before we start, is there anything unclear or do you have more questions?

We’re especially interested in understanding:

- How you would like the robot to help you in these scenarios.
- The way you’d prefer to interact with it
- What functionalities are useful, what is intuitive and clear, and what is confusing and could be improved.

APPENDIX S. TRANSCRIPT CO-CREATION SESSION

Main Researcher: ‘Yes. I’ll start with a short introduction. This is your robot assistant. It’s still under development and not perfect yet. The goal of this experiment is to shape its functions together. You’re encouraged to give feedback and suggest new features. It’s a smart robot with lots of possibilities.’
Main Researcher: ‘For example, it has a screen where anything can be displayed. Right now, everything is still possible, so feel free to suggest even the wildest ideas.’
Project Manager: ‘Working hours and breaks, maybe an alarm that signals when the break is over?’
Older Painter 2: ‘Yes, that would be useful.’
Main Researcher: ‘Yes, those kinds of suggestions are very welcome.’
Main Researcher: ‘The first scenario is starting your workday. You’ll load the robot with the necessary tools. Here’s what it can do now:
• It has a light mechanism, activated by the blue button and deactivated by the red one.
• There’s an LED strip for extra lighting.
• The screen can be used to control features like lighting.
• It responds to voice commands.
• The sides are for larger materials like glass or wood.
• There’s a handle for manual steering.
• The back opens for extra storage.
• Inside, there’s a simulated temperature sensor, for example for paint cans.’
Project Manager: ‘How much can it carry?’
Older Painter 2: ‘It can hold quite a lot.’
Project Manager: ‘Screws won’t fall out, right?’
Assistant Researcher: ‘No, it can carry a heavy bucket, but does it actually fit?’
Main Researcher: ‘I have a half-full bucket here — it fits easily.’
Project Manager: ‘Maybe we should test if it can transport water too.’
Main Researcher: ‘Yes, and you can take this one with you. We can also test how it responds to commands like “come here”.’
Project Manager: ‘Can it really respond to voice commands?’
Assistant Researcher: ‘Yes, for example, you can tell it to go to a specific spot.’
Project Manager: ‘That’s handy.’
Older Painter 1: ‘What about the workplace? How do we get it to follow us there?’
Assistant Researcher: ‘Maybe a feature where it follows you?’
Older Painter 1: ‘That would be useful.’
Older Painter 2: ‘But what if you stop and it keeps following you? Isn’t that awkward?’
Assistant Researcher: ‘Yes, maybe there should be a “park mode”.’
Older Painter 2: ‘A function to pause and resume it.’
Project Manager: ‘A remote control could be useful too.’

Main Researcher: ‘So would you prefer controlling it with a controller, or would you rather have it follow you hands-free?’
Older Painter 1: ‘A controller seems easier.’
Project Manager: ‘Maybe both options should be available, so we can choose.’
Older Painter 2: ‘Yes, in case the automatic function fails, you still want control.’
Assistant Researcher: ‘So a controller and an auto-follow mode?’
Older Painter 1: ‘Yes, and if it gets stuck, manual control is essential.’
Project Manager: ‘Exactly, like with some machines that have both automatic and manual modes.’
Main Researcher: ‘Okay, how will you get it inside?’
Older Painter 1: ‘Maybe using the follow function?’
Older Painter 2: ‘Yes, it’s following you now.’
Project Manager: ‘I want to try that too!’
Older Painter 1: ‘What kind of vehicle is currently used?’
Project Manager: ‘A towing cart.’
Assistant Researcher: ‘Let’s say…’
Main Researcher: ‘Do you need to accelerate going uphill?’
Project Manager: ‘Yes, especially if there's an aluminium rack on it.’
Older Painter 2: ‘You can add more equipment on it.’
Assistant Researcher: ‘Why is the ladder placed on top instead of inside?’
Older Painter 1: ‘The inside is already full.’
Assistant Researcher: ‘So you actually have more tools than space?’
Older Painter 1: ‘Yes. With two or three people, it gets crowded quickly. We also wanted to test it, so we had to put something on top.’
Main Researcher: ‘Makes sense.’
Project Manager: ‘But isn’t it too big?’
Older Painter 2: ‘That’s why we’re looking for a better solution.’
Main Researcher: ‘Any ideas so far?’
Older Painter 1: ‘We’ve thought about it, but no definite solution yet.’
Assistant Researcher: ‘How does it feel driving with the current setup? Smooth or clumsy?’
Older Painter 1: ‘Mostly flat terrain is fine, but uneven ground is tricky.’
Project Manager: ‘Yes, bumps make it harder.’
Older Painter 1: ‘Crossing a boat ramp, for example, is a real challenge.’
Older Painter 2: ‘It needs to be more stable.’
Assistant Researcher: ‘Would you change the width?’
Older Painter 2: ‘Maybe a bit wider, so it’s easier to balance.’
Older Painter 1: ‘And stronger underneath to handle more weight.’
Older Painter 2: ‘That would increase stability.’
Assistant Researcher: ‘Do you see this more as an assistant or a replacement?’
Older Painter 1: ‘More like an assistant.’
Project Manager: ‘Yes, it supports us, but doesn’t replace us.’
Assistant Researcher: ‘How do you transport materials now?’
Project Manager: ‘With a wheelbarrow. For example, two buckets of paint, 12.5 kg each.’
Older Painter 1: ‘That’s 25 kg in total.’
Project Manager: ‘Paint is heavier than water, you really feel it.’

Assistant Researcher: ‘Is it mentally draining to work with it?’
Older Painter 1: ‘Sometimes, especially in busy environments.’
Assistant Researcher: ‘What happens with obstacles like a kerb?’
Older Painter 1: ‘It’s tricky. If it gets stuck, you have to lift it. Maybe a ramp would help.’
Older Painter 2: ‘Or a system that lifts itself slightly.’
Assistant Researcher: ‘So you need to learn how it behaves?’
Older Painter 1: ‘Yes, it takes getting used to.’
Main Researcher: ‘Did you notice any difference in lighting while working?’
Project Manager: ‘Yes, extra lighting would help, especially early or late in the day.’
Older Painter 2: ‘Maybe a cover so the light doesn’t shine in your eyes.’
Older Painter 1: ‘Or a battery-powered work lamp.’
Older Painter 2: ‘Yes, something you can take anywhere.’
Assistant Researcher: ‘How important is cost for these changes?’
Project Manager: ‘It shouldn’t cost more than €500.’
Older Painter 2: ‘A socket would be nice, but we mostly use batteries.’
Project Manager: ‘We don’t want hassle with cords.’
Assistant Researcher: ‘Where would a battery rack work best?’
Older Painter 1: ‘Inside, for protection.’
Older Painter 2: ‘Or at the bottom on the side.’
Assistant Researcher: ‘What about the ladder?’
Older Painter 2: ‘Maybe a bracket on one side to secure it.’
Project Manager: ‘And a platform for sheet material on the other side.’
Older Painter 2: ‘As long as it doesn’t get too wide.’
Assistant Researcher: ‘What if one side is for painters, the other for carpenters?’
Project Manager: ‘That’s possible.’
Older Painter 1: ‘Painters usually need a different setup than carpenters.’
Older Painter 2: ‘Maybe a modular system that you can customise.’
Project Manager: ‘With hooks or interchangeable parts.’
Project Manager: ‘If you use a wing nut or something similar, you could attach it quickly.’
Older Painter 1: ‘It’s quite narrow here because of the double windowpane. We should keep that in mind.’
Assistant Researcher: ‘Maybe make the side panels modular. Then painters could insert their own setup.’
Older Painter 2: ‘The carpenter version is about 3 cm wider.’
Assistant Researcher: ‘That makes it wider, but that’s a trade-off depending on use.’
Older Painter 2: ‘If you can detach the door, you could make it narrower when needed.’
Assistant Researcher: ‘What do you think of the current storage layout? It’s quite full, even on top. Would you arrange it differently?’
Project Manager: ‘Maybe a spot for 10-litre buckets with a matching holder.’
Assistant Researcher: ‘Do you use those often?’
Project Manager: ‘Yes, especially the heavy buckets.

Older Painter 2: ‘10-litre buckets don’t fit well. We had to lift the whole worktop.’
Project Manager: ‘The buckets stay upright.’
Older Painter 2: ‘But they go up with the top. It’s slightly too narrow for 10-litre buckets.’
Assistant Researcher: ‘So it needs to be wider?’
Older Painter 1: ‘Maybe a sliding system?’
Assistant Researcher: ‘So you could pull it out and push it back in?’
Older Painter 1: ‘Yes, but that would be at the back.’
Project Manager: ‘Like a stretcher maybe?’
Older Painter 2: ‘Exactly.’
Older Painter 1: ‘And what about brushes? Where would you put them?’
Older Painter 2: ‘You’ve got brushes and other painting tools.’
Project Manager: ‘Maybe an extra side shelf for brushes?’
Older Painter 2: ‘That sounds good.’
Project Manager: ‘Wouldn’t that be awkward?’
Older Painter 1: ‘In practice, brushes are always with the paint cans. We grab a jar of brushes and take it with us.’
Assistant Researcher: ‘How many paint cans do you usually take?’
Project Manager: ‘It varies, but we often pour paint into smaller cans and use those.’
Older Painter 2: ‘So a holder for small cans could help?’
Assistant Researcher: ‘Could you take a photo of that setup?’
Project Manager: ‘Yes, I’ll hold it for a moment.’
Assistant Researcher: ‘And what do you think of the height? Is it right?’
Project Manager: ‘Yes, but it could be slightly higher.’
Older Painter 1: ‘Adjustable storage would be nice.’
Project Manager: ‘If it’s higher, you can fit more in.’
Older Painter 2: ‘Yes, the higher, the better.’
Assistant Researcher: ‘But it has to stay stable.’
Project Manager: ‘Yes, people won’t handle it gently.’
Assistant Researcher: ‘How should the height be adjusted? With a button or automatically?’
Older Painter 2: ‘Just buttons to go up and down, like an office chair, would be easiest.’
Assistant Researcher: ‘What if the robot adapts to the user — remembering their preferred height?’
Project Manager: ‘That would be handy, especially when multiple people use it.’
Older Painter 2: ‘But you don’t always have the same person using it.’
Assistant Researcher: ‘What if the robot tells you it’s going to rain, for example?’
Older Painter 2: ‘That would be useful, especially in the Netherlands.’
Project Manager: ‘Humidity matters too. We can’t paint above 85% humidity. If the robot could measure that, it would really help.’
Main Researcher: ‘And temperature too.’
Assistant Researcher: ‘How often do you use your phone at work?’
Project Manager: ‘Quite often, especially for timers and checking drying times.’
Assistant Researcher: ‘Would you like to make hands-free calls via the robot?’
Project Manager: ‘No, preferably not. Private calls should remain private.’

Assistant Researcher: ‘Okay, anything else you’d like to add?’
Project Manager: ‘No, this is already very helpful.’
Older Painter 1: ‘Maybe a few extra shelves so we can store more stuff?’
Assistant Researcher: ‘We can definitely look into that!’
Main Researcher: ‘What if it slips in between with a wheel loader?’
Older Painter 2: ‘That would be great — you’d have a really smooth scaffold.’
Main Researcher: ‘That’s exactly the kind of thing the robot could help with. We’re focusing here on the interaction between you and the device.’
Project Manager: ‘Do you get it?’
Assistant Researcher: ‘Not fully, but we could also take it off the wheels.’
Project Manager: ‘That works, right? Then we just stand on the scaffold and carry on.’
Older Painter 2: ‘One moment.’
Project Manager: ‘We should try to make it go wrong — then we can take pictures of it.’
Older Painter 1: ‘Exactly.’
Project Manager: ‘That’s how you learn.’
Older Painter 1: ‘We’ll test it again tonight.’
Main Researcher: ‘Yes, and then we’ll take it from there.’
Older Painter 2: ‘Do you need to make any changes?’
Older Painter 1: ‘Yes.’
Older Painter 2: ‘Great. Maybe add some extra lighting?’
Older Painter 1: ‘Yes. It’s following you now, right?’
Assistant Researcher: ‘Yes, it responds to the lift.’
Older Painter 1: ‘Maybe we need to optimise that.’
Assistant Researcher: ‘Yes, and we still need to set something for the button.’
Older Painter 1: ‘That’s possible.’
Project Manager: ‘I was sceptical at first, but now I see the benefit.’
Older Painter 1: ‘I thought we were just going to time how long painting takes.’
Main Researcher: ‘That would make for a terrible manager.’
Older Painter 1: ‘Some do think like that.’
Main Researcher: ‘That’s not our approach.’
Older Painter 1: ‘Some companies don’t trust their skilled workers.’
Project Manager: ‘That’s why we’re here — to see how to improve the work.’
Older Painter 1: ‘Exactly.’
Main Researcher: ‘For you, and others in the industry.’
Project Manager: ‘The job needs to become more appealing. It’s physically demanding — knees, elbows, everything wears down. If we can ease that, it’s a big win.’
Main Researcher: ‘Exactly.’
Assistant Researcher: ‘Besides physical benefits, what else does this bring? Less absenteeism? Better efficiency?’
Project Manager: ‘Less strain, better efficiency, easier material transport. It also makes the job more appealing to young people.’
Assistant Researcher: ‘So innovation helps attract new workers?’
Project Manager: ‘Yes, it makes the trade more interesting.’
Assistant Researcher: ‘How’s the robot working now?’

Older Painter 1: ‘We’re testing how it moves on the scaffold.’
Project Manager: ‘We need to check if it can handle thresholds.’
Main Researcher: ‘That’s important — you encounter them often in practice.’
Project Manager: ‘Exactly.’
Older Painter 2: ‘The lift cable came loose.’
Assistant Researcher: ‘That’s a shame.’
Project Manager: ‘Is it game over?’
Main Researcher: ‘Maybe a cable got damaged.’
Assistant Researcher: ‘We need to check that.’
Project Manager: ‘If it keeps running, we can keep testing.’
Older Painter 1: ‘We’ll have a look.’
Older Painter 2: ‘Maybe it needs bigger wheels.’
Older Painter 1: ‘Yes, I think so too.’
Project Manager: ‘We need to think about where to position it.’
Older Painter 2: ‘Near the starting point of the work makes sense.’
Older Painter 1: ‘Then you can grab your tools and get to work.’
Older Painter 2: ‘And it can ride along if needed.’
Older Painter 1: ‘Yes, if it stops halfway and adapts to the site.’
Project Manager: ‘Important — no scaffold is the same.’
Main Researcher: ‘Exactly.’
Older Painter 2: ‘Every worksite is different.’
Older Painter 1: ‘No scaffold is perfect.’
Main Researcher: ‘Ideally, it should adapt to that.’
Project Manager: ‘Single-family homes are even trickier — getting to the back garden can be hard.’
Older Painter 2: ‘Then it would need to drive over pavements or roads.’
Assistant Researcher: ‘Yes, it should get as close as possible to the work area.’
Older Painter 2: ‘Exactly — the less carrying, the better.’
Older Painter 1: ‘Look, the site hut is near your work area in the north.’
Older Painter 2: ‘Right.’
Older Painter 1: ‘It’s here now, but there’s another two streets over.’
Older Painter 2: ‘Then you’re walking.’
Older Painter 1: ‘Yes, and you’re not carrying anything.’
Assistant Researcher: ‘And the construction lift — does that go to the scaffold?’
Older Painter 1: ‘Yes, exactly.’
Older Painter 2: ‘It’s nice with a scaffold, but you immediately get a slope down.’
Assistant Researcher: ‘So maybe a board could be placed in between?’
Project Manager: ‘There’s usually something in place.’
Older Painter 2: ‘It’s steep though, really steep.’
Older Painter 1: ‘That lift is really steep.’
Assistant Researcher: ‘So it slopes down from the lift to the scaffold. If it can handle that, it could drive onto the scaffold itself?’
Project Manager: ‘Can it bridge that gap?’
Older Painter 2: ‘Maybe with a plank?’
Assistant Researcher: ‘Or with bigger wheels?’
Older Painter 1: ‘Bigger wheels would help — slightly higher.’
Main Researcher: ‘This chassis was originally made for use in restaurants.’

Older Painter 2: ‘Yes, but with taller wheels, it goes a lot further.’
Assistant Researcher: ‘So if it had that and could handle slopes, could it go from the lift onto the scaffold?’
Older Painter 2: ‘Stairs are always a problem.’
Older Painter 1: ‘If I were working on the scaffold, I wouldn’t take it up there.’
Project Manager: ‘Scaffolds are small, not much space.’
Older Painter 1: ‘Exactly.’
Older Painter 2: ‘Right, so…’
Older Painter 1: ‘I’d park it somewhere with the tools.’
Older Painter 2: ‘But not too far away.’
Older Painter 1: ‘Right now, we use a sort of wheelbarrow with a box on it. We can load it and lock it.’
Assistant Researcher: ‘Do you work with balconies often?’
Older Painter 2: ‘Yes, that’s our main job.’
Older Painter 1: ‘We’ve got three blocks behind us — it’s always the same.’
Assistant Researcher: ‘If it’s on the other side, could it come to you?’
Older Painter 1: ‘If I’ve got a small can with me, it’s fine. For the radio, maybe. Otherwise, it’s not needed.’
Main Researcher: ‘And the radio?’
Older Painter 1: ‘Sure, could work.’
Project Manager: ‘If it could follow and the floor is uneven, could it bring a fresh bucket of paint?’
Older Painter 2: ‘That would be handy.’
Project Manager: ‘You don’t want to walk back for more paint if you’ve already got a small pot.’
Older Painter 1: ‘The robot could handle that.’
Older Painter 2: ‘Yes, less walking.’
Assistant Researcher: ‘If multiple people are working, could it move between them to bring paint?’
Project Manager: ‘That’s possible.’
Older Painter 1: ‘But it might get in the way — especially if bricklayers are carrying pipes, ladders, stairs.’
Older Painter 2: ‘On the gallery, it would be ideal.’
Assistant Researcher: ‘Could it lift the paint to working height so it’s easier to reach?’
Older Painter 1: ‘No, that would be difficult.’
Assistant Researcher: ‘So you’d rather hold it yourself?’
Older Painter 2: ‘Yes, we keep the tray on the stairs.’
Older Painter 1: ‘Scoop off some paint and move on.’
Assistant Researcher: ‘Are you working on this wall now?’
Main Researcher: ‘No?’
Older Painter 2: ‘We’ll sort it out.’
Main Researcher: ‘What would you do here?’
Older Painter 2: ‘Roll it.’
Main Researcher: ‘On your knees?’
Older Painter 2: ‘If it’s a winding section, we do it later. You have to roll it in one go, or you’ll get streaks.’

Main Researcher: ‘Do you often work in places like this?’
Older Painter 1: ‘Not usually. You’re half on your knees here.’
Main Researcher: ‘Would you bring a small step?’
Older Painter 1: ‘That’s not allowed.’
Main Researcher: ‘So if it’s not set up properly, it gets redone?’
Older Painter 1: ‘Yes. On average, it’s workable. Some stand, others kneel.’
Main Researcher: ‘If it were smaller, would that help?’
Older Painter 1: ‘I’d need to bring even less.’
Older Painter 2: ‘And on the scaffold, everyone stands together.’
Older Painter 1: ‘Weather matters too.’
Older Painter 2: ‘Yes, we need good weather.’
Older Painter 1: ‘It could bring drinks though.’
Older Painter 2: ‘That would be amazing.’

Assistant Researcher: ‘Do you often have contact with residents?’
Older Painter 1: ‘Yes, and a lot of comments.’
Assistant Researcher: ‘Do language barriers come up?’
Older Painter 1: ‘Sometimes.’
Assistant Researcher: ‘Would a translation function be useful?’
Older Painter 1: ‘It might be.’
Assistant Researcher: ‘That it could translate into different languages?’
Older Painter 1: ‘Yes, that could work.’
Main Researcher: ‘But you also have your phone for that.’
Older Painter 1: ‘That’s true.’
Main Researcher: ‘Do you experience this with colleagues too?’
Older Painter 1: ‘Yes, we have Polish colleagues who don’t speak Dutch.’
Main Researcher: ‘How do you manage that now?’
Older Painter 1: ‘Often, one of them speaks a bit of English, the other doesn’t.’
Older Painter 2: ‘Yes.’
Assistant Researcher: ‘Would a robot that translates be useful?’
Main Researcher: ‘You’d just say, “Hey Karel, say this in Polish.”’
Older Painter 1: ‘That could be an option.’
Assistant Researcher: ‘Thanks for your input!’
Assistant Researcher: ‘Maybe we could take some photos to show you working with the robot — on the scaffold or gallery, depending on where you’d use it.’
Older Painter 1: ‘Yes, good idea.’
Assistant Researcher: ‘Since it’s here now, we can shoot some photos and videos.’
Main Researcher: ‘Maybe also show that it sometimes gets in the way?’
Older Painter 1: ‘Yes, it was in our way a few times.’
Main Researcher: ‘Also for others. You only realise how wide it is when you’re carrying something past it.’
Assistant Researcher: ‘Let’s show how you work with it. We’ll position the robot and see how you place it.’
Older Painter 1: ‘When you move, you want it to move back a bit automatically.’
Main Researcher: ‘It needs to make space. If it’s placed wrong, it gets in the way.’

Older Painter 1: ‘The advantage over a wheelbarrow is that it can move by itself.’
Main Researcher: ‘Exactly. That’s a big benefit.’
Older Painter 1: ‘Sometimes you need the sander, then a paint can — it should all be easy to reach.’
Main Researcher: ‘Would you want the tools at the front, or doesn’t it matter?’
Older Painter 1: ‘If the sander’s ready, I’ll grab the paint right after. It just needs to be practical and make sense.’
Older Painter 2: ‘Exactly.’
Main Researcher: ‘Would you show us again?’
Assistant Researcher: ‘Yes, just a quick demo.’
Older Painter 1: ‘This time without a brush.’
Project Manager: ‘Right.’
Main Researcher: ‘Just act like you’re working.’
Older Painter 2: ‘Looks good.’
Older Painter 1: ‘And say someone calls you now?’
Older Painter 2: ‘Then I’d switch it off and take my phone.’
Main Researcher: ‘And where would you put it down?’
Older Painter 2: ‘Just somewhere handy. Maybe it needs a phone holder.’
Main Researcher: ‘Do you use a ladder here too?’
Older Painter 1: ‘Yes, sometimes you work overhead.’
Assistant Researcher: ‘Would it be useful if the robot could lift things up?’
Older Painter 2: ‘That would be ideal — like sandpaper or a dustpan and brush.’
Older Painter 1: ‘Maybe a hook for a rubbish bag?’
Main Researcher: ‘And a vacuum cleaner?’
Older Painter 1: ‘Yes, great for the dust.’
Assistant Researcher: ‘Where would you hang the rubbish bag?’
Older Painter 2: ‘Just on a hook. There’s always stuff to throw away.’
Assistant Researcher: ‘When you finish one window frame and move to the next, would you want the robot to follow you?’
Older Painter 2: ‘Yes, it should stay nearby but not too close.’
Older Painter 1: ‘Maybe keep a distance of 1 to 1.5 metres.’
Assistant Researcher: ‘Would you set that distance, or should it figure it out itself?’
Older Painter 2: ‘Preferably it does that automatically.’
Assistant Researcher: ‘And if you take a break, would you leave it there?’
Older Painter 2: ‘Yes, it doesn’t need to follow me to the site hut.’
Project Manager: ‘But in future, if it’s better at navigating, could it come along?’
Older Painter 2: ‘Maybe — if it can detect obstacles and find its way.’
Older Painter 1: ‘It would be handy if it could go to a charging station during breaks.’
Assistant Researcher: ‘Like a robot lawnmower.’
Older Painter 2: ‘Exactly — set it up once and it handles it.’
Assistant Researcher: ‘Would you want it to give notifications — like weather alerts?’
Older Painter 2: ‘Only if they’re useful. Not too many.’
Assistant Researcher: ‘And calendar appointments?’en.

Older Painter 1: ‘That might work for two people. For a group, it gets chaotic.’
Older Painter 2: ‘Yes, one robot per duo seems logical.’
Assistant Researcher: ‘So you usually work in pairs?’
Older Painter 2: ‘Yes, often.’
Assistant Researcher: ‘Then a robot per duo makes sense.’
Older Painter 2: ‘Yes, that would work well.’
Assistant Researcher: ‘Great, thanks for your input!’
Assistant Researcher: ‘He also has — not clearly visible — a virtual heating plate to keep paint cans at the right temperature.’
Older Painter 2: ‘That’s useful in winter. Your van is warm again in five minutes. But actually, that’s not even necessary.’
Assistant Researcher: ‘And during breaks, do you usually take the paint indoors?’
Older Painter 2: ‘No, we mostly leave it outside. It’s fine.’
Assistant Researcher: ‘And it doesn’t cool down too much?’
Older Painter 1: ‘No.’
Older Painter 2: ‘No, it’s fine.’
Older Painter 1: ‘Whether you're painting or not, it doesn’t really matter. But if it gets too warm…’
Assistant Researcher: ‘Then you’d want to cool it down?’
Older Painter 1: ‘Yes, otherwise it spreads too thin.’
Older Painter 2: ‘You use too little paint then.’
Older Painter 1: ‘If you need a certain layer thickness, it shouldn't be too runny. If you dilute it or heat it too much, the paint changes.’
Older Painter 2: ‘Yes, that’s never good.’
Assistant Researcher: ‘So you'd want to keep it at a comfortable temperature — not too thin, not too thick.’
Older Painter 1: ‘Exactly.’
Assistant Researcher: ‘So maybe the heating system isn’t really necessary?’
Older Painter 1: ‘No, not really.’
Assistant Researcher: ‘Right. What about a battery charging function — would you use that?’
Older Painter 1: ‘Yes, definitely.’
Older Painter 2: ‘For long jobs or if you use multiple batteries, it’s useful.’
Older Painter 1: ‘Yes, that’s one of the main things we need.’
Assistant Researcher: ‘And the LED light — would you prefer button control or automatic?’
Older Painter 2: ‘A button is best — on and off.’
Older Painter 1: ‘Yes, keeps it simple.’
Project Manager: ‘A light you can operate by hand when needed.’
Older Painter 1: ‘Yes, that’s useful.’
Assistant Researcher: ‘Would you prefer using the robot as it is, or with a controller?’
Main Researcher: ‘Depends.’
Project Manager: ‘If it gets heavy, plastic could help — so you don’t have to drag it.’
Older Painter 2: ‘Yes, plastic would be good.’

Project Manager: ‘Then it wouldn’t be too heavy. Ideally, it should stay hand-controlled.’
Assistant Researcher: ‘Right.’
Older Painter 2: ‘And being able to remove parts helps too.’
Project Manager: ‘And if you want to control it from below…’
Older Painter 1: ‘You could use a joystick.’
Older Painter 2: ‘Yes.’
Assistant Researcher: ‘So a joystick for fine control?’
Older Painter 2: ‘Yes, that would be handy.’
Project Manager: ‘Nice to have.’
Older Painter 2: ‘Exactly.’
Assistant Researcher: ‘Okay, let’s go back to the storage unit. I’ve got some different buttons there, like an emergency stop. That’s required on electronic devices to quickly shut them off if something goes wrong.’
Older Painter 2: ‘Yes, that’s important.’
Assistant Researcher: ‘So we’ll sort that out. After that, we’ll reflect on what you thought and what stood out. Let’s return the machine now. Imagine the day’s over…’

Older Painter 2: ‘Really? Like that button you have to press?’
Older Painter 1: ‘Yes, same as on a boom lift, right?’
Assistant Researcher: ‘When you need to stop it, you have to turn it.’
Older Painter 2: ‘So you’re doing it consciously.’
Older Painter 1: ‘Exactly.’
Main Researcher: ‘Shall we take a photo of this?’
Older Painter 1: ‘Bye, Ruud.’
Main Researcher: ‘And this is also a kind of display.’
Assistant Researcher: ‘Is that for temperature?’
Older Painter 1: ‘Yes, temperatures.’
Main Researcher: ‘Which one would you use?’
Older Painter 2: ‘That one.’
Older Painter 1: ‘That one.’
Project Manager: ‘For the emergency stop, right?’
Older Painter 1: ‘A lot of buttons look alike.’
Older Painter 2: ‘Yes, exactly. Boom lifts are the same — most people are familiar with them.’
Main Researcher: ‘Which would you use to turn on the light?’
Older Painter 1: ‘That one.’
Main Researcher: ‘That one for the light?’
Older Painter 2: ‘I’d guess just a switch.’
Older Painter 1: ‘Just a push-button.’
Project Manager: ‘Yes, a single one.’
Older Painter 1: ‘To turn it off too — a small push button.’
Project Manager: ‘Or these for platform up and down?’
Older Painter 1: ‘Yes, that could work.’
Main Researcher: ‘Something lighter than this?’
Older Painter 1: ‘Yes, that would be better.’

Older Painter 2: ‘This one is easier on the eyes.’
Older Painter 1: ‘Higher than a low one.’
Older Painter 2: ‘And if you’ve got gloves on?’
Older Painter 1: ‘Then it works well.’
Older Painter 2: ‘In the dark, you could lose it quickly.’
Project Manager: ‘Is it a touchscreen?’
Assistant Researcher: ‘Touchscreen? No.’
Project Manager: ‘So it’s a button then?’
Main Researcher: ‘So arrows on the button?’
Older Painter 2: ‘Yes, that would help.’
Project Manager: ‘A label to show what it does.’
Main Researcher: ‘Exactly.’
Older Painter 2: ‘Then everyone knows what happens.’
Assistant Researcher: ‘To understand the functions.’
Older Painter 2: ‘Soon these will come in every colour except red and blue.’
Older Painter 1: ‘A phone touchscreen gives you a torch, but it’s less handy.’
Older Painter 2: ‘Heavy too.’
Assistant Researcher: ‘Does it work with gloves on?’
Older Painter 2: ‘Depends.’
Older Painter 1: ‘I never wear gloves.’
Older Painter 2: ‘Me neither, not while working.’
Project Manager: ‘Maybe through an app?’
Assistant Researcher: ‘Yes, could be. The app connects to the robot.’
Main Researcher: ‘So you could control it here or via the app?’
Older Painter 2: ‘Yes.’
Project Manager: ‘That would make sense.’
Older Painter 1: ‘Sure, that’ll probably come.’
Project Manager: ‘A joystick could work too.’
Main Researcher: ‘That’s an idea.’
Project Manager: ‘Avoids complex hardware adjustments.’
Older Painter 2: ‘Right.’
Assistant Researcher: ‘Maybe you’d still want something physical for safety.’
Project Manager: ‘Yes — like a physical emergency button.’
Older Painter 1: ‘That should be somewhere.’
Assistant Researcher: ‘Exactly.’
Main Researcher: ‘And how would you control the lamp?’
Project Manager: ‘With this button.’
Assistant Researcher: ‘One of the two.’
Older Painter 2: ‘Larger or smaller makes it easier.’
Project Manager: ‘Big is sturdier.’
Older Painter 1: ‘Indeed.’
Project Manager: ‘Maybe separate on and off buttons?’
Assistant Researcher: ‘Or an emergency button?’
Project Manager: ‘Yes.’
Older Painter 1: ‘Preferably a physical button.’
Main Researcher: ‘That’s easier and more familiar.’
Older Painter 1: ‘Exactly like on a boom lift.’

Project Manager: ‘Yes, you have to press a button there too.’
Older Painter 1: ‘That’s right.’
Project Manager: ‘We use switches to start it.’
Main Researcher: ‘So you’d go for a combination of buttons?’
Project Manager: ‘Yes — that one, and for the light, this one.’
Main Researcher: ‘Where would you place them?’
Project Manager: ‘The emergency button separately, so it’s not pressed accidentally.’
Older Painter 1: ‘Yes, that’s smart.’
Main Researcher: ‘And how do you feel about the robot?’
Older Painter 1: ‘It’s nice that you don’t have to bend down.’
Assistant Researcher: ‘So physical benefits.’
Project Manager: ‘Also improves efficiency.’
Older Painter 1: ‘Yes, you’ve got everything with you.’
Older Painter 2: ‘Battery and lights nearby.’
Assistant Researcher: ‘And maybe navigation?’
Older Painter 1: ‘If it keeps 1.5 to 2 metres distance.’
Project Manager: ‘Then you don’t have to move it around.’
Older Painter 2: ‘That would work well.’
Main Researcher: ‘Would you see the robot as a colleague?’
Older Painter 1: ‘A little bit.’
Older Painter 2: ‘Maybe that feeling grows over time.’
Assistant Researcher: ‘It already kind of feels that way.’
Older Painter 2: ‘If it works well, it’s ideal.’
Main Researcher: ‘Great to hear!’

APPENDIX T. PREPARATIONS INTERACTION EVALUATION

User study structure

Evaluating interaction with storyboard (~30-45 minutes)

1. Introducing myself and the project
2. Consent forms
3. Show videos of co-creation session
    a. Robot moving
    b. Lifting mechanism
    c. Access storage compartment
4. Show and explain design of the robot
5. Show storyboard and explain the activity
6. Participants read storyboard and think out loud. Reflect on the interactions. Maybe already dots.
7. Questions
    a. There are some empty slots in the storyboard: what do you think are the upsides of the robot? - Green dots
    b. Is there anything you would like to change? - Red dots
    c. What do you think are barriers to overcome to start using the robot?

Adapted materials

1

Het eerste wat ik doe wanneer ik mijn werkdag begin, is Bassie ophalen van het oplaadstation.

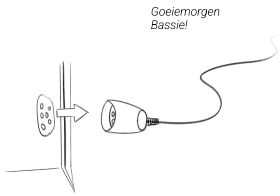

2

Ik gebruik mijn sleutel om hem te ontgrendelen en zet de robot aan door op de grote groene Aan-knop te drukken.

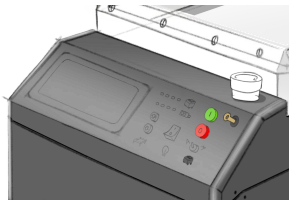

3

Vervolgens vul ik Bassie met alle gereedschappen en materialen voor de dag bij de opslagcontainer.

Dankzij het uitschuifbare opbergvak en het ingebouwde licht gaat dit eenvoudig.

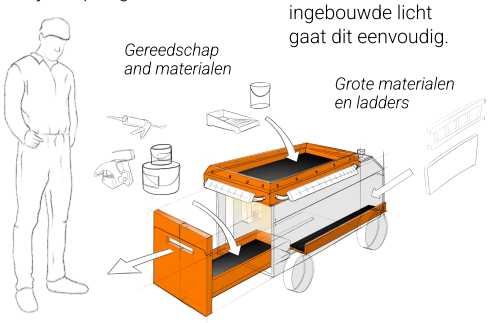

4

Ik gebruik veiligheidskoorden om de spullen bovenop en aan de zijkanten goed vast te zetten voor transport.

Vervolgens volgt Bassie mij naar de werkplek.

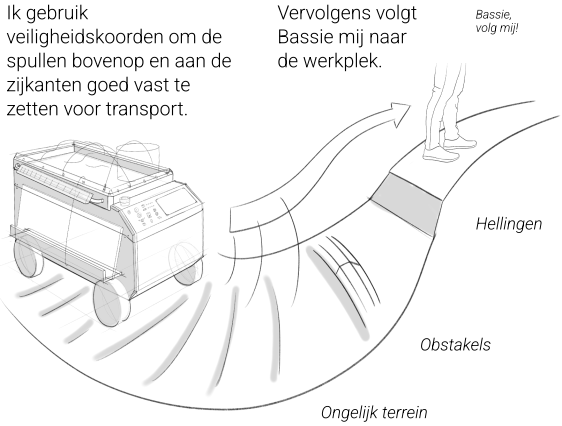

5



Als we de lift gebruiken, druk ik op de knoppen en volgt Bassie mij naar binnen.

Bassie past ook in bouwliften.

6



Op de werkplek zet ik Bassie in de parkeerstand, zodat ik ruimte heb om de werkplek te inspecteren.



Vaak zet ik het bouwlicht aan om de werkplek beter te verlichten.

7

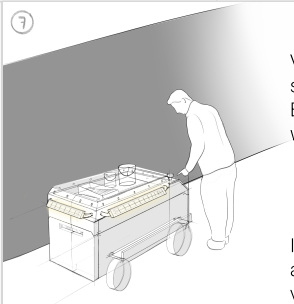

Via het scherm zet ik Bassie in de werkstand.

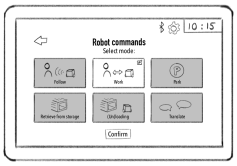

Ik kan de instellingen aanpassen aan de hand van de taken die ik moet uitvoeren.

Zo kan ik bijvoorbeeld bepalen hoe ver Bassie bij mij vandaan blijft.

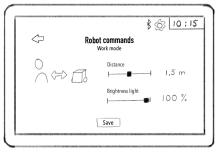

8

Indien nodig schakel ik kort de handmatige modus in met de schakelaar en stuur ik Bassie met de joystick naar de juiste positie.

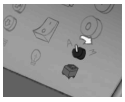

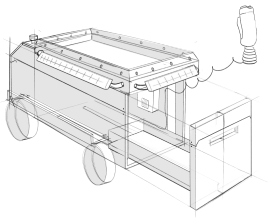

9

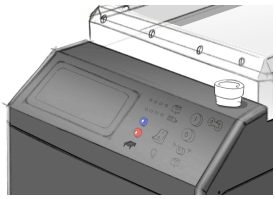

Vervolgens gebruik ik de knoppen van het hefmechanisme om het werkblad op de juiste hoogte in te stellen, zodat ik niet hoef te bukken om deze materialen te gebruiken.

10

Afval

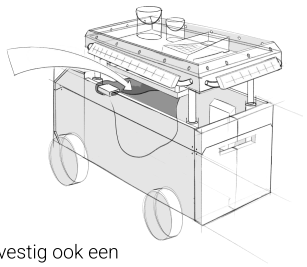

Ik bevestig ook een vuilniszak aan de robot, zodat ik mijn werkplek netjes kan houden.

11



Terwijl ik langs de muur werk, blijft Bassie dicht bij mij en heb ik altijd toegang tot mijn gereedschappen en materialen.

12

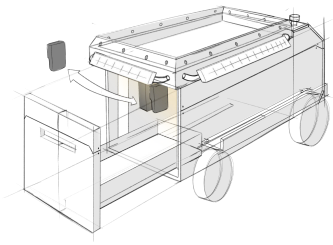

Wanneer de accu van mijn schuurmachine leeg is, kan ik deze vervangen door een volle accu en de lege accu opladen met Bassie via de lader in het opbergvak.

13

Het display en de lichtindicatoren laten zien hoeveel stroom de accu en Bassie zelf nog hebben.

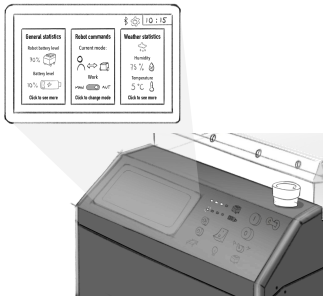

14

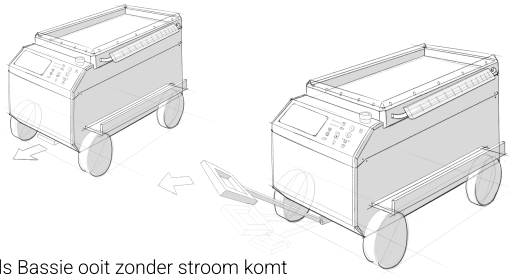

Als Bassie ooit zonder stroom komt te zitten, kan ik de hendel aan de voorkant uittrekken om de robot naar het oplaadstation te trekken.

15

Tijdens het schilderen gebruik ik de kleine lade onder het werkblad om mijn kwasten en kleinere gereedschappen op te bergen.

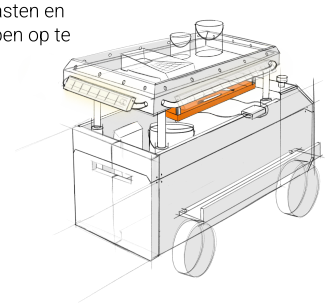

16

Soms heb ik extra verf nodig of ben ik iets vergeten bij de opslagcontainer.

In dat geval kan ik Bassie naar de opslagcontainer sturen om het voor mij op te halen.

Ik help hem in de lift of bouwlift en kan ondertussen verder werken terwijl Bassie mijn spullen ophaalt.

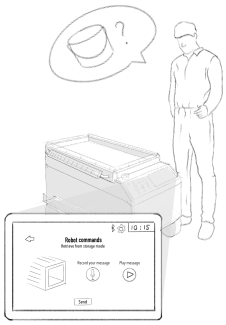

17

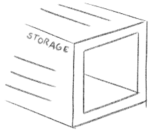

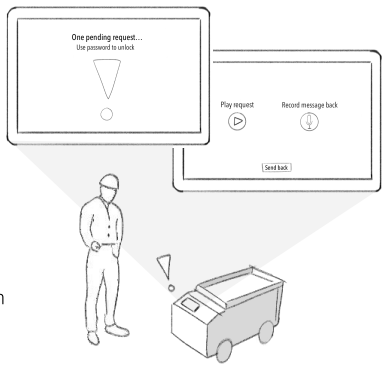

Bassie kan zelfstandig terugrijden naar de opslagcontainer en mijn verzoek doorgeven aan mijn collega's daar.

18

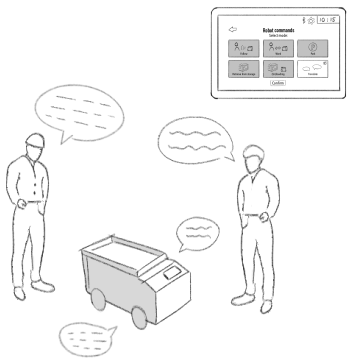

Ook kan Bassie helpen met vertalen, zodat de communicatie tussen collega's en bewoners makkelijker verloopt.

19

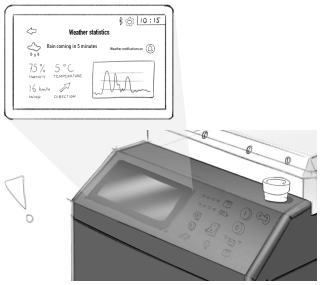

Als ik dat wil, kan Bassie mij waarschuwen wanneer de luchtvochtigheid te hoog is of als het binnenkort gaat regenen. Dit helpt mij bij het kiezen van de juiste werkzaamheden. Op het scherm zie ik meer gedetailleerde weersinformatie.

20

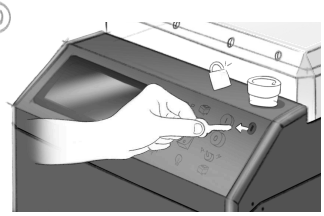

Tijdens de lunchpauze verwijder ik de sleutel om Bassie te vergrendelen. Hierdoor worden de wielen, het scherm, de knoppen uitgeschakeld en het opbergvak op slot gedaan. Bassie kan dan nog wel de accu van mijn schuurmachine opladen.

Ik laat Bassie tijdens de lunch op de galerij staan met mijn gereedschappen en materialen veilig opgeborgen.

21

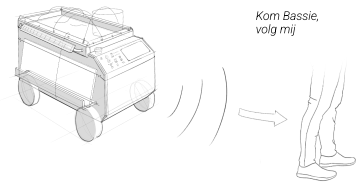

Aan het einde van de werkdag volgt Bassie mij terug naar de opslagcontainer.

22

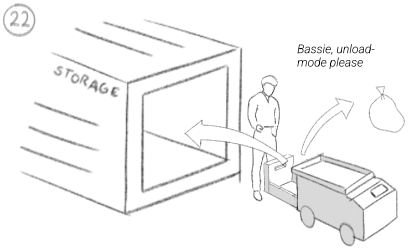

Ik zet de ontlaadmodus aan en leg alle gereedschappen en materialen terug in de opslagcontainer. Ook gooi ik het afval weg.

23

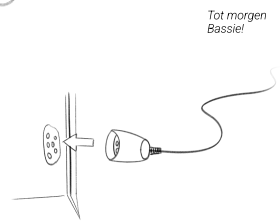

Tot slot zet ik Bassie terug bij het oplaadstation en ga ik naar huis.

APPENDIX U. TRANSCRIPT INTERACTION EVALUATION

About voice control
Younger painter: That voice control—could it also work with buttons? I'd actually prefer that.
Older painter: His name's just Bassie. I think that's funny.
On loading and transporting to the workplace
Younger painter: If you've got paint cans on there, they'll shake when the robot moves. So you need to secure them.
Older painter: Bassie fits in the construction lift too—that's handy.
Older painter: It needs to handle bumps and kerbs, like getting up and down pavements.

About using the lift together
Older painter: Makes sense the robot follows you into the lift. If it goes in first and something goes wrong, the doors could shut and it's gone.
Younger painter: I don't think it's a good idea for the robot to press buttons—what if there's a fault and it just keeps pressing them? People would get annoyed.

On robot commands
Younger painter: I don't even like leaving voicemails, let alone using voice control.
Older painter: It shouldn't be too complicated. If there's a remote, just three buttons: follow, stop, and go. Otherwise you'd have to learn too much.
Younger painter: What I like about the display is you can instantly see your command went through. And if you're busy, calling it over might still be handy.
Older painter: Some of the guys have strong dialects—Polish, Bulgarian. It's hard for them to give commands in Dutch. They'd be better off with a control panel, unless there's a translation feature.
Younger painter: Can't you set the language to Polish? On some projects, 60% of the team is Polish.
Yellow sticker: Preference for display over voice commands
Younger painter: Especially in the morning at 7 a.m. outside someone's house—I'm not shouting commands at a robot. And if it doesn't respond, you have to raise your voice. I'd just use the buttons.

On manual mode
Older painter: It makes sense to still have manual control. I assume the point isn't to lift the thing ourselves—we're not supposed to carry heavy loads.
Older painter: Using a joystick might always be better than follow mode. You don't know what the robot will do. With a controller, you're in charge—it stops when you stop.

Younger painter: If the robot gets stuck, you can always grab the controller. If it follows as expected, no problem.
Older painter: I might sound negative. But if something goes wrong, I have to fix it. It has to earn my trust—I don't want any trouble.

Training on-site
Older painter: I think it'll be easy to learn. I play games with my grandkids—I'll figure it out. Joystick's not hard, even at my age.
Yellow sticker: Doubts about automatic follow mode
Older painter: I'm still a bit unsure about follow mode. I might always control it manually. But if both options are there, people can choose what they prefer.
On protecting the robot from dirt
Older painter: When you're painting walls, the robot gets splattered. It needs proper protection—maybe a layer you can peel off daily.
Younger painter: All buttons should be protected. Like on a scissor lift. It needs to be tough.

On the adjustable work surface
Older painter: If you're rolling ceilings, you can set the heavy paint bucket on the work surface. That's ideal.
Younger painter: It's handy if you need multiple tools—sanding, caulking, stopping—so you don't have to keep walking back and forth. It's basically your work table.

On a small drawer
Older painter: A pull-out drawer for filling knives or small clean tools like screwdrivers.
Older painter: I could even stash my pack of cigarettes in there.

On a waste bin
Older painter: That's a great idea. We do a lot of taping these days. When we pull it off, the scaffold's littered with tape. It'd be ideal to throw it away straight away.

On charging the battery
Older painter: That's a nice system. The robot still has enough power to start charging itself? That's great. At the end of the day, it should return to its charging point.
Older painter: On this site, it's tricky—only one power socket. But on bigger sites, we've got storage containers with power. You can make space for it there. Then it charges overnight.
Older painter: Not in the break hut. Not where we eat. Just in the storage container.

On the screen
Younger painter: Can the display have a removable protective cover? After a few weeks, paint gets on everything—you won't be able to see the screen anymore.

On charging mid-day
Older painter: Can you charge it mid-job? Like if you forget to charge it and only have 30% left, could you use an extension lead to charge it on-site?
Project manager: Or if you're working far from the storage container, just plug it in at the resident's place.

On pick-up mode from storage
Older painter: That's cool—though it might become a hassle.
Older painter: Depends on what you need. If it takes 20 minutes to fetch a pot of paint, I might as well walk myself.
Project manager: I'm not sure you'd want it driving through the street unattended—legally or practically.
Older painter: Yeah, don't want it run over.
Project manager: Even if it's allowed, you'd still need someone to help it. Could be standing around broadcasting a message for 20 minutes. But maybe you send it ahead and call the person on-site to grab it when it arrives.

On using the robot for communication
Younger painter: It'd probably be used for jokes.
Older painter: Not very efficient—I'd just shout or give them a call.
Younger painter: Or just walk over.

On translation features
Older painter: That's ideal. If we can't communicate with someone, we could take the robot to the door.
Younger painter: It might not go into the porch, but most houses are accessible, so it can get close.

On weather data
Younger painter: There are apps like Buienradar, but then you've got to take your gloves off and grab your phone. And you don't get distracted by TikTok.
Project manager: Really, you want to log weather data. For quality assurance, we need to prove conditions—temperature, humidity—if the paint job fails. If we store daily data, we're covered.
Older painter: If the robot can check conditions in the morning and tell you whether painting is feasible, that's really helpful.
Younger painter: Like getting a daily weather forecast with warnings for rain.
On locking the robot during breaks
Younger painter: It's like a scissor lift—you leave your gear inside, raise the platform if needed, take the key, and return after break.
Younger painter: We all carry our own keys, so that's easy.

Final comment
Older painter: Looks very innovative. I thought it was all a bit sci-fi, but it turns out it's real.

Concerns
Younger painter: I do wonder how dust and paint-resistant it really is—we deal with that every day.
Younger painter: Also thresholds, uneven garden paths, mud, grass. It needs to be all-terrain.
Younger painter: Most motorised tools we use have tracks or are heavy-duty. If this robot isn't all-terrain, it'll only work on flat new builds.
Older painter: If you've got a narrow scaffold, it's no good. But on wide scaffolds, sure.
Younger painter: Will it obey traffic rules? You don't want it blindly crossing roads. It needs to be aware of surroundings—for safety and to prevent damage.
Younger painter: Is it static—just programmed—or can it learn?
Younger painter: A bit of self-learning could be useful. Sometimes you want it ahead of you, not just following.
Younger painter: Maybe it can have an option: follow behind or lead. But leading is harder—it needs to adjust to your pace.

Benefits
Younger painter: Mainly having your tools nearby at all times.
Older painter: You usually have to walk back and forth. If you need caulk, paint, sander, steps—it carries everything. You don't have to. That's ideal.
Older painter: And when painting walls, it stays near you. You're not bending down constantly—saves effort.
Younger painter: It carries everything in one go. Going from garden to garden, it's quite handy.
Marketing and purchasing
Project manager: We'll definitely buy it. What would it cost? I'd guess €2500–€3500. Like an exoskeleton.
Project manager: Would you buy or rent? I think buy. Rental only makes sense for big investments—like cherry pickers.
Older painter: Scaffolds and storage are too expensive, so we rent those.
Project manager: You'd buy four, rotate them between projects. Not every project needs one. Use it where it adds value. If it's always in use, it pays for itself.

APPENDIX V. PREPARATIONS AESTHETIC EVALUATION

User study structure

Aesthetics with moodboards (~45-60 minutes)

1. Now we move on from the interaction of the robot to the look and feel of the robot.
2. Prepare materials for new activity
3. Explain new activity. Start with enveloppe 1.
    a. You can rate the following products into 4 categories: ++, +, - and - -. You can place the images into the category. The ++ category is what you think would fit best in this context in terms of how the robot would look like, and - - is that you don't want the robot to look like in this context.
4. Do the same for enveloppe 2-4.
5. Turn around the images and see the colours on the back
6. Explain the theory with car example
7. Questions
    a. If you look at the collages now, you are leaning towards this quadrant but you also like many elements of [x] and [x]. Does this agree with what you just did?
    b. How would you describe what your ideal robot assistant looks like?

Adapted materials

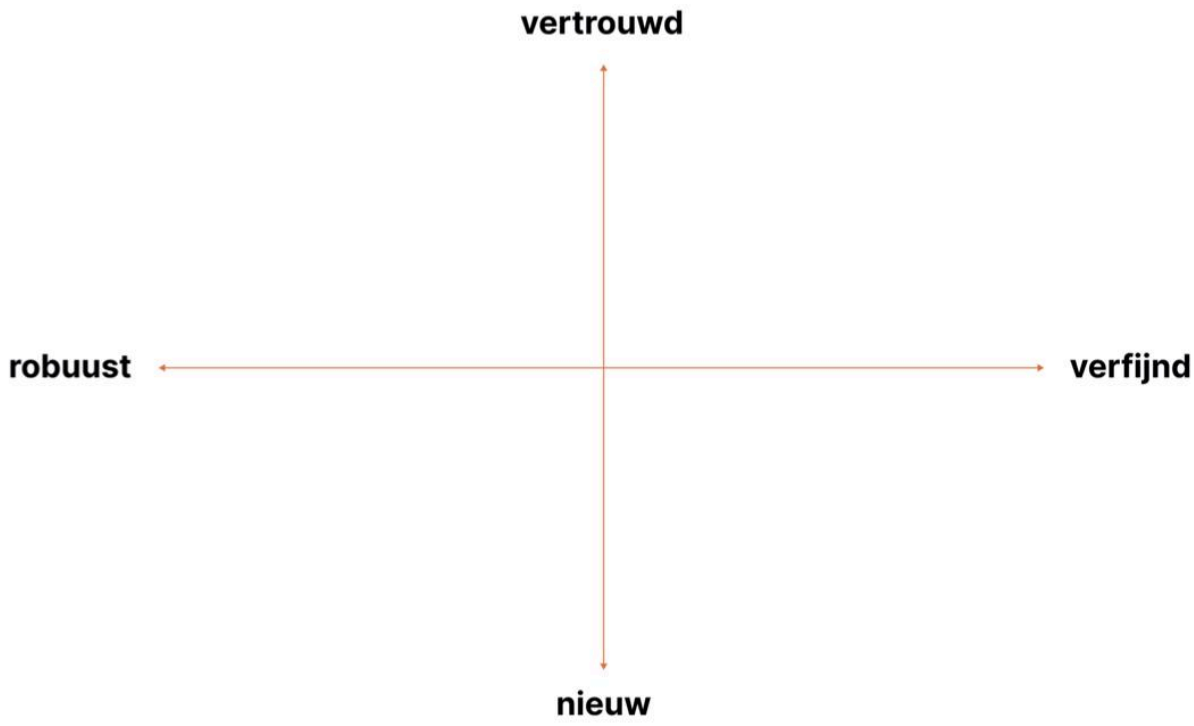


vertrouwd
robuust
verfijnd
nieuw


vertrouwd
robuust
verfijnd
nieuw

Vertrouwd & Robuust

Referentieproducten



Vorm inspiratie
Ruw, industrieel, robuust



Materialen en texturen
Metaal, mat zwart met accent kleuren, rubber, getextureerd

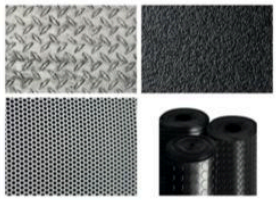

Functionele details



Vertrouwd & Verfijnd

Referentieproducten



Vorm inspiratie
Gestroomlijnd, vloeiende lijnen, zachte rondingen



Materialen en texturen
Warm, neutraal, mat, één accent kleur

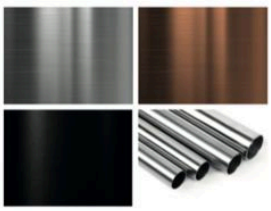

Functionele details



Nieuw & Robuust

Referentieproducten



Vorm inspiratie
Futuristisch, geometrische vormen



Materialen en texturen
Geborsteld aluminium, veel textuur, hoog contrast

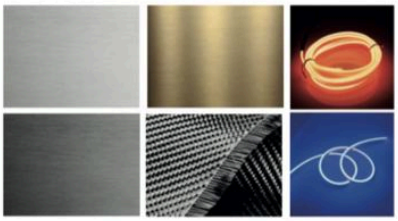

Functionele details



Nieuw & Verfijnd

Referentieproducten



Vorm inspiratie
Minimalistisch, ronde en zachte vormen, organisch



Materialen en texturen
Licht, zacht, pastelkleuren, zacht licht



Functionele details



APPENDIX W. TRANSCRIPT AESTHETICS EVALUATION

Reference products

'Practically speaking, it's better if there aren't too many shapes or grooves, because otherwise it will get dirty.' – Younger painter

'In terms of colour, it's going to get dirty anyway. I wonder if it's better for the colour to be functional, so you can see where the dirt is, or should it be more aesthetic, so that paint splatters are less noticeable. Maybe do something with colour that already looks like splatters, so the robot doesn't appear so messy or dirty.' – Younger painter

'This is how I imagine it: robust, large wheels.' – Project Leader

'This looks like a kitchen. We don't want that.' – Older painter

Shape Inspiration

'It depends on the function. My first thought is about fine dust that can get in between.' – Younger painter

'I don't know if that's practical in terms of dirt [talking about the ridges]. It should have a smooth finish.' – Older painter

'If you want to keep it somewhat clean and keep the mess out, then yes.' – Younger painter

'If you're sanding, it'll get dirty in no time. It needs to be easy to rinse off. Waterproof. That screen should also be waterproof so you can quickly clean it by spraying it.' – Younger painter

'Maybe even clean it with a pressure washer.' – Project Leader

'Or you should be able to pull a protective cover over the robot.' – Older painter

'Yes, but if you're working with it and need the materials, a cover won't work. The robot itself needs to be able to handle it.' – Younger painter

'Here, I see paint dripping between all the parts.' – Younger painter

'You should avoid large corners and small shapes as much as possible.' – Younger painter

'You don't want a lot of ridges; that just collects dirt.' – Older painter

Functional details

'It's getting a bit too much for me. He [other painter] can handle it.' – Older painter

'[About the omni wheel] That's great. If it can move left, right, forward, and backward.' – Younger painter

'Those are office cart wheels. Like on a coffee cart.' – Older painter

'It looks nice, but not ideal for the robot.' – Younger painter

'You need sturdy wheels.' – Older painter

'A control panel like this. Nice and simple.' – Older painter

Materials and textures

'That's an anti-slip pattern. That's useful for the bottom, so everything stands more firmly.' – Older painter

'I'd want a colour that really stands out. Red-white, like a warning tape, so everyone sees the robot and doesn't bump into it.' – Project Leader

'Yes, definitely.' – Younger painter

'Just a noticeable machine, so everyone sees it and is aware.' – Project Leader
'Yes, I agree. You need to see that there's a machine there.' – Older painter

'Warning lights on it, signal colours.' – Younger painter

'Yes, for example, or yellow and black. As long as it stands out—for safety.' – Project Leader

'That bright yellow—it really catches the eye.' – Older painter

Final reflections

'Yellow leans quite a bit to the positive side.' – Younger painter

'We want the robust feel, but it should be well-finished and easy to clean.' – Older painter

'We're somewhere in between [robust and refined]. We want the practical parts of both. This category (yellow) has a lot of components that are made of one piece. Fewer parts, fewer panels, fewer screws. That makes it easier to clean. And the robustness is especially practical important for the maneuverability, so it can handle obstacles and can handle rough handling.' – Younger painter

How would you describe your ideal robot assistant?
‘Robust and refined. I think it’s practical if the robot has both. Finding a balance between the two.' – Younger painter

'I think you’ve worked it all out very well. You’ve clearly put a lot of thought into it.' – Older painter

'For us, the storage needs to be empty so we can fit large paint cans inside. But maybe a carpenter would want shelves in it, so they can organise all their tools.' – Project Leader

'You could turn it into a mobile sawing table for carpenters.' – Younger painter

'At first I was a bit skeptical, but now I think it’s kind of fun. Probably by the time I retire, it’ll be on the market.' – Older painter

'Most of the components are already available. So it shouldn’t take much longer.' – Project Leader

'I think this could definitely appeal to younger people too.' – Older painter

APPENDIX X. EXPLORATION FINAL DESIGN

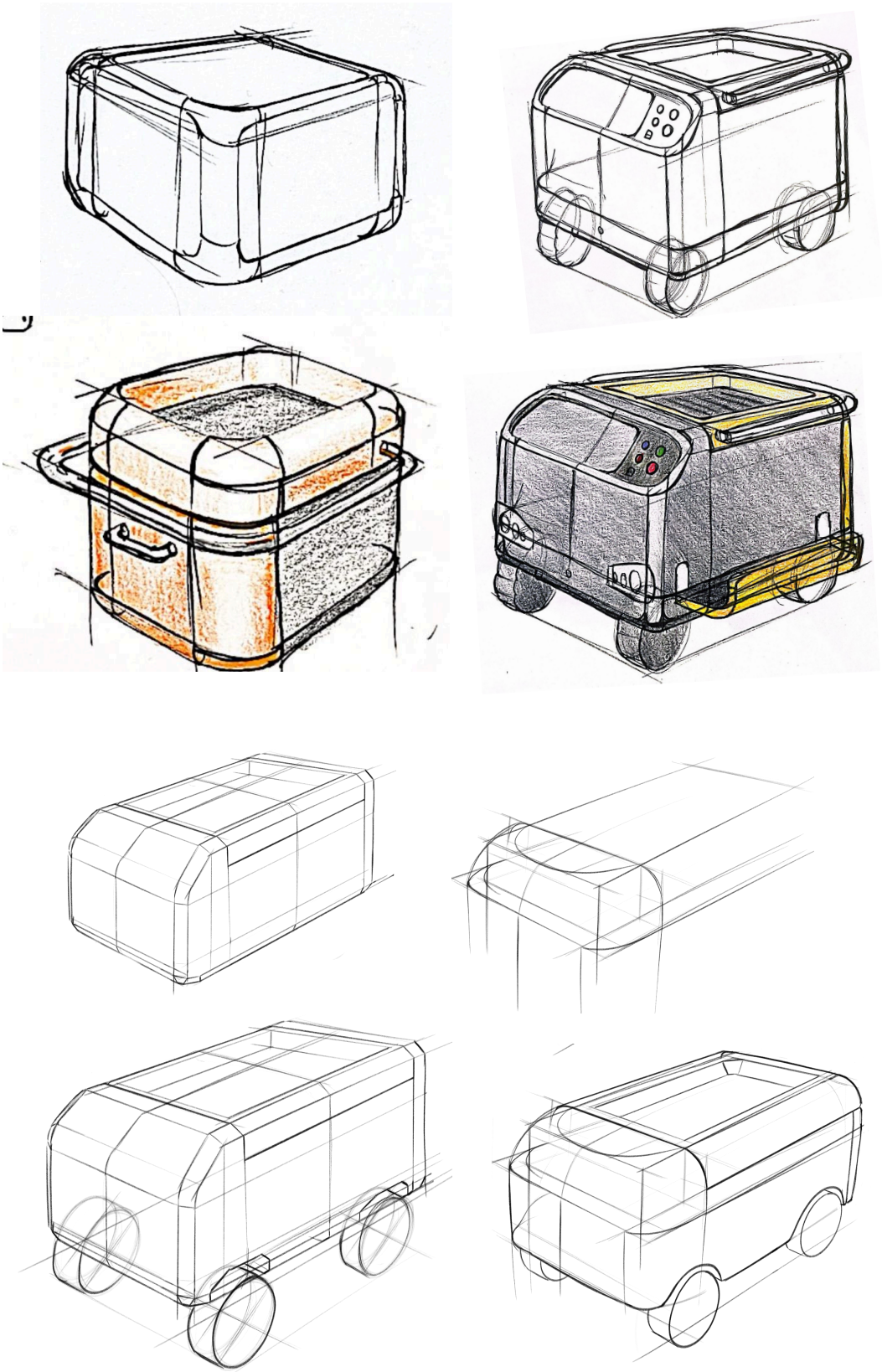

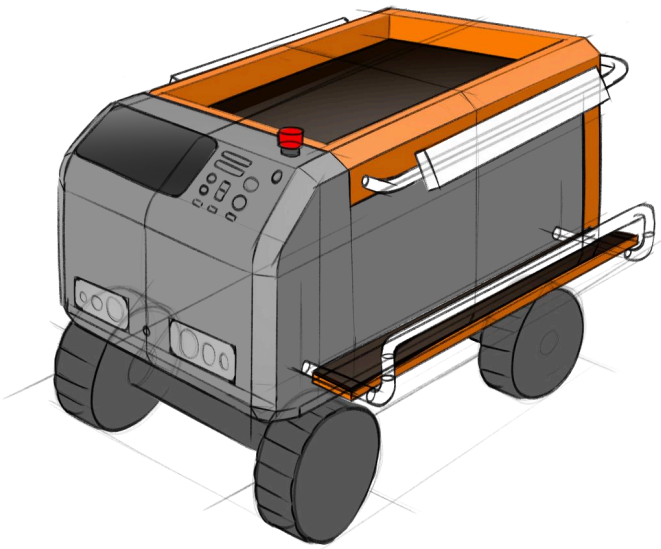

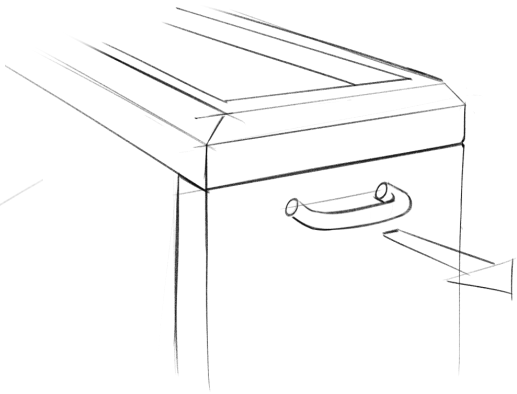

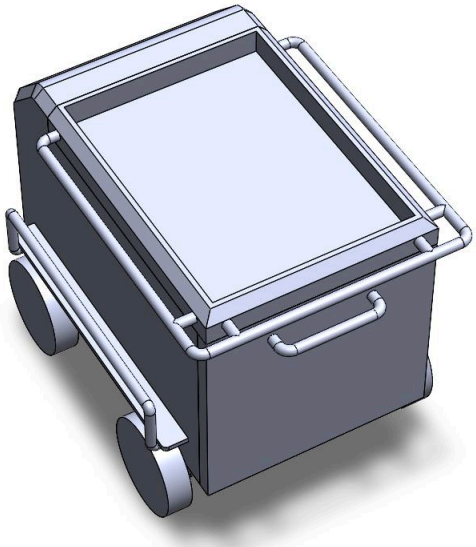

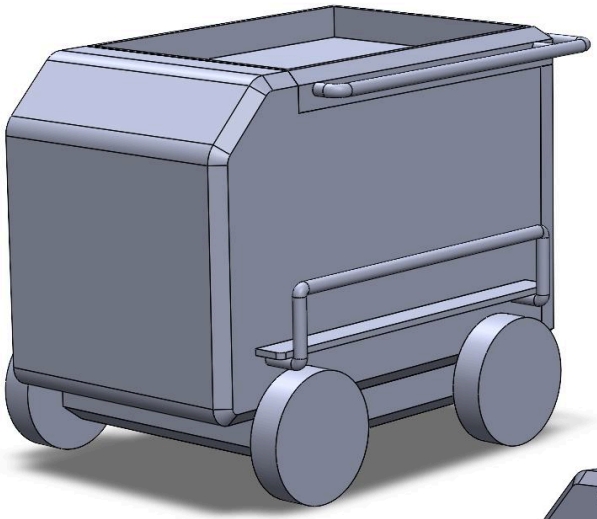

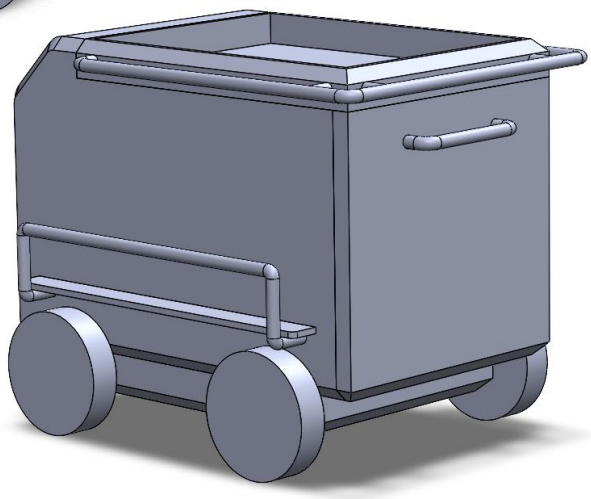

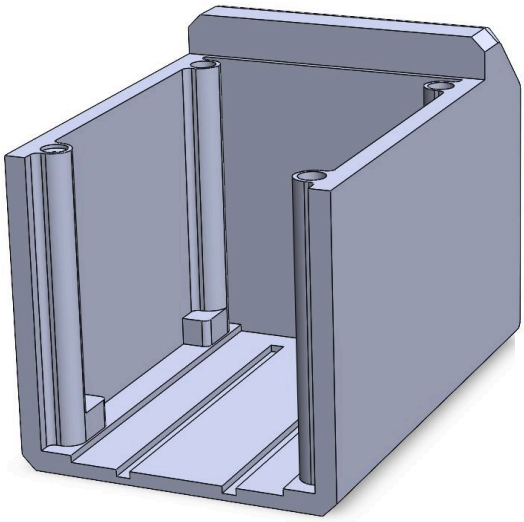

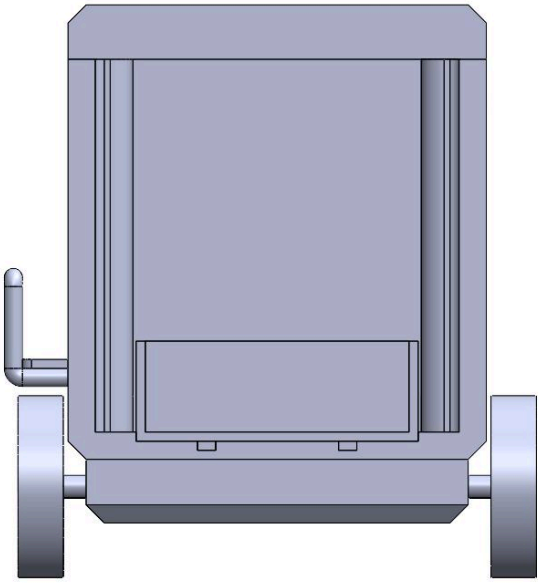

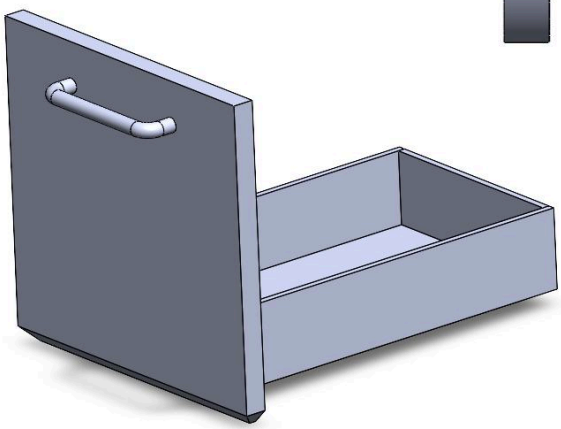

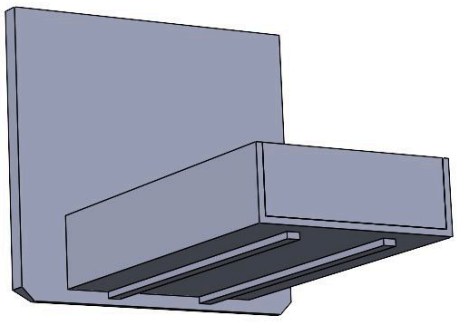

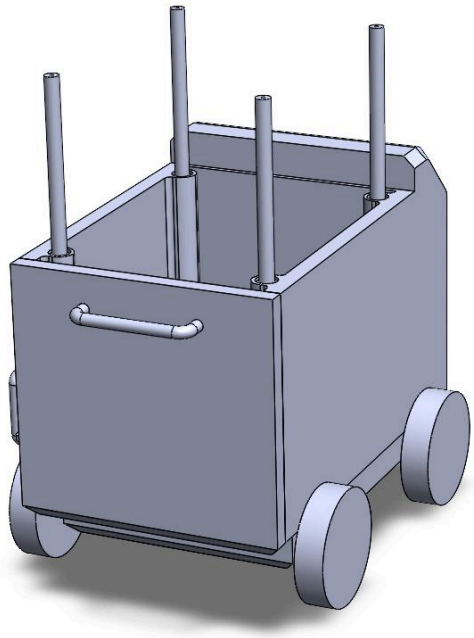

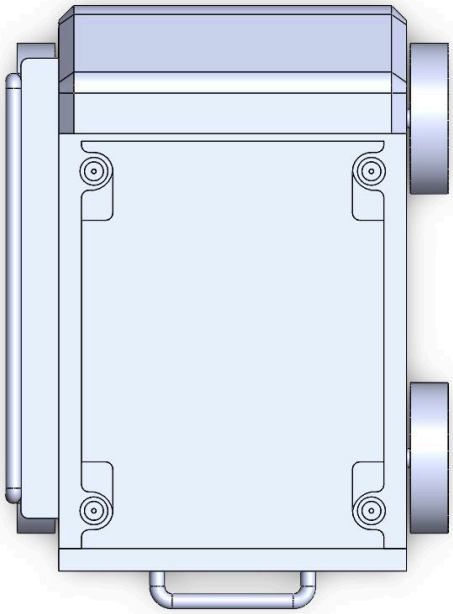

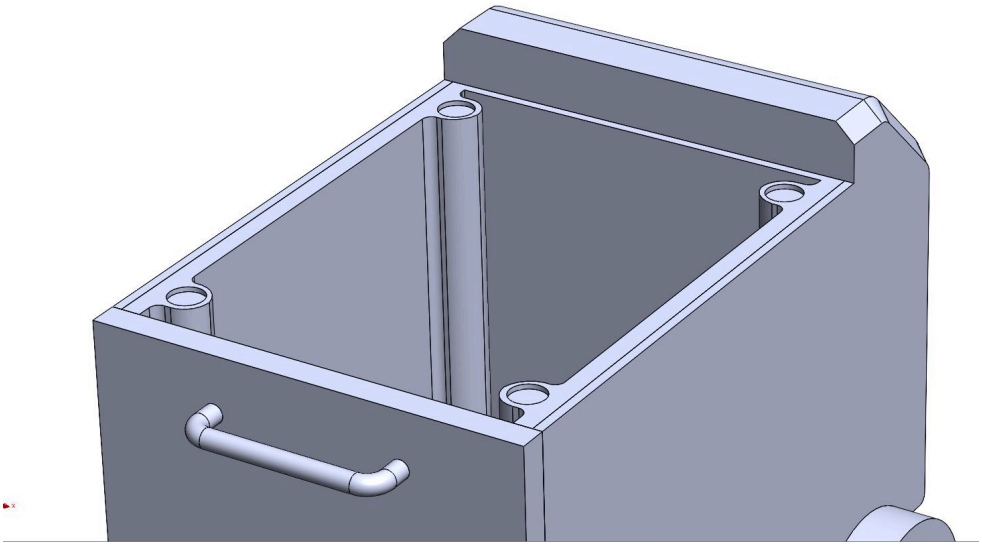

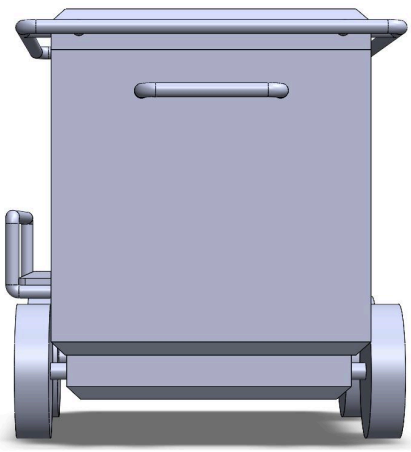

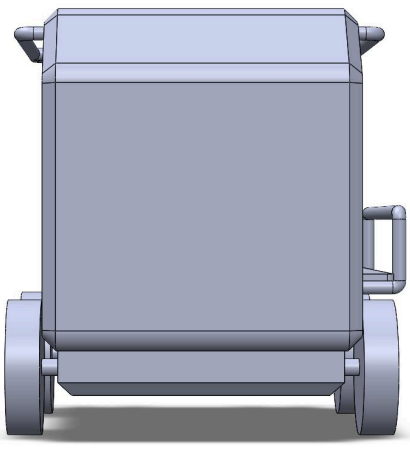

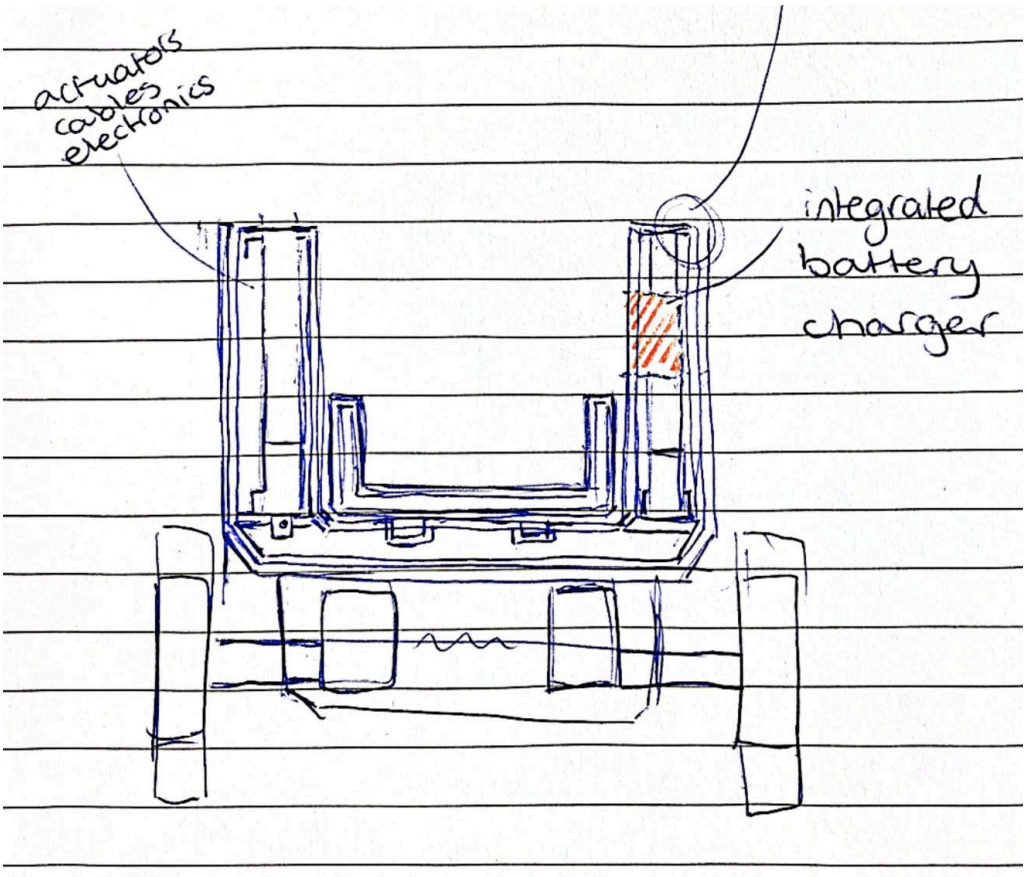
actuators
cables
electronics
integrated
battery
charger

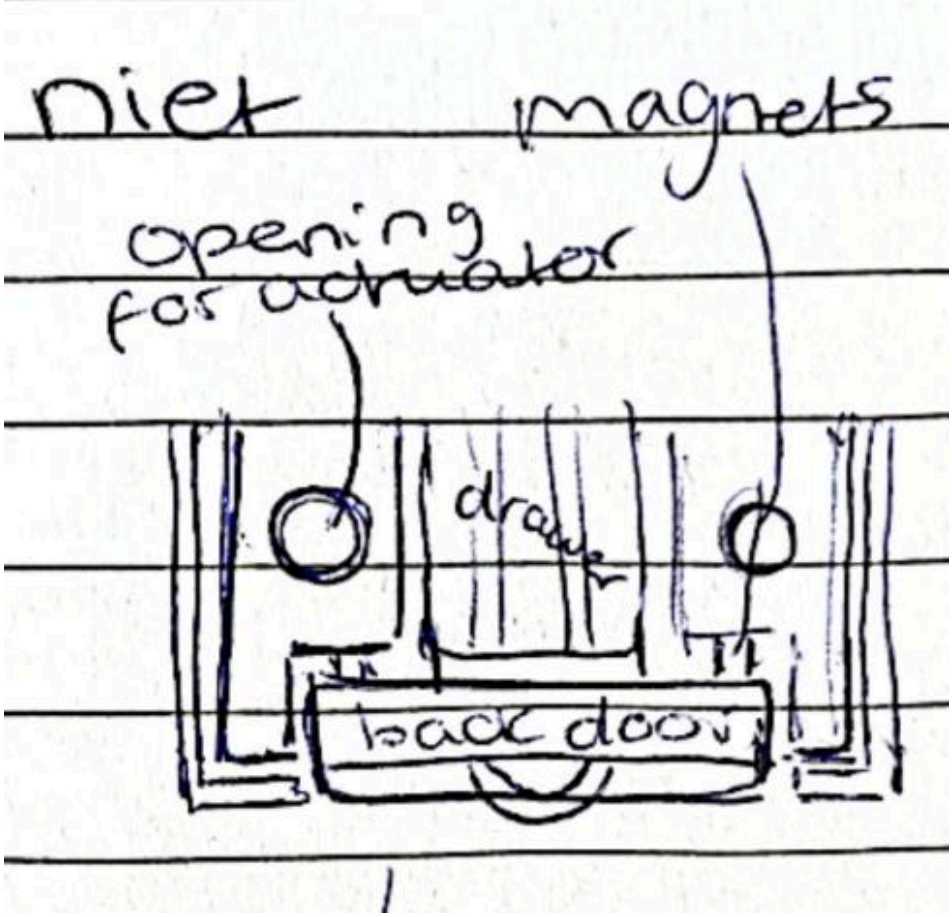
niet
magnets
opening
for actuator
drawer
back door

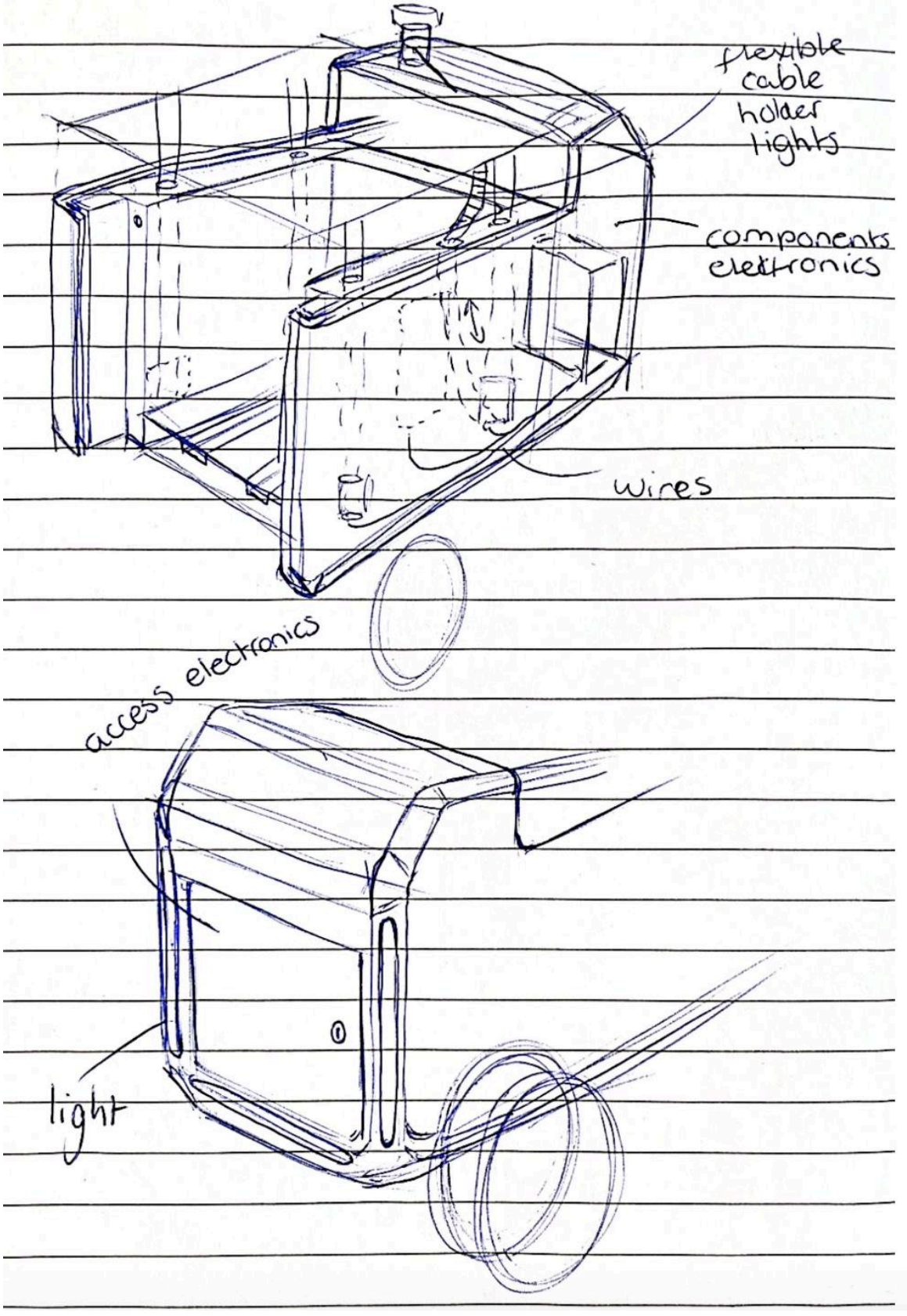
flexible cable holder lights
components electronics
wires
access electronics
light

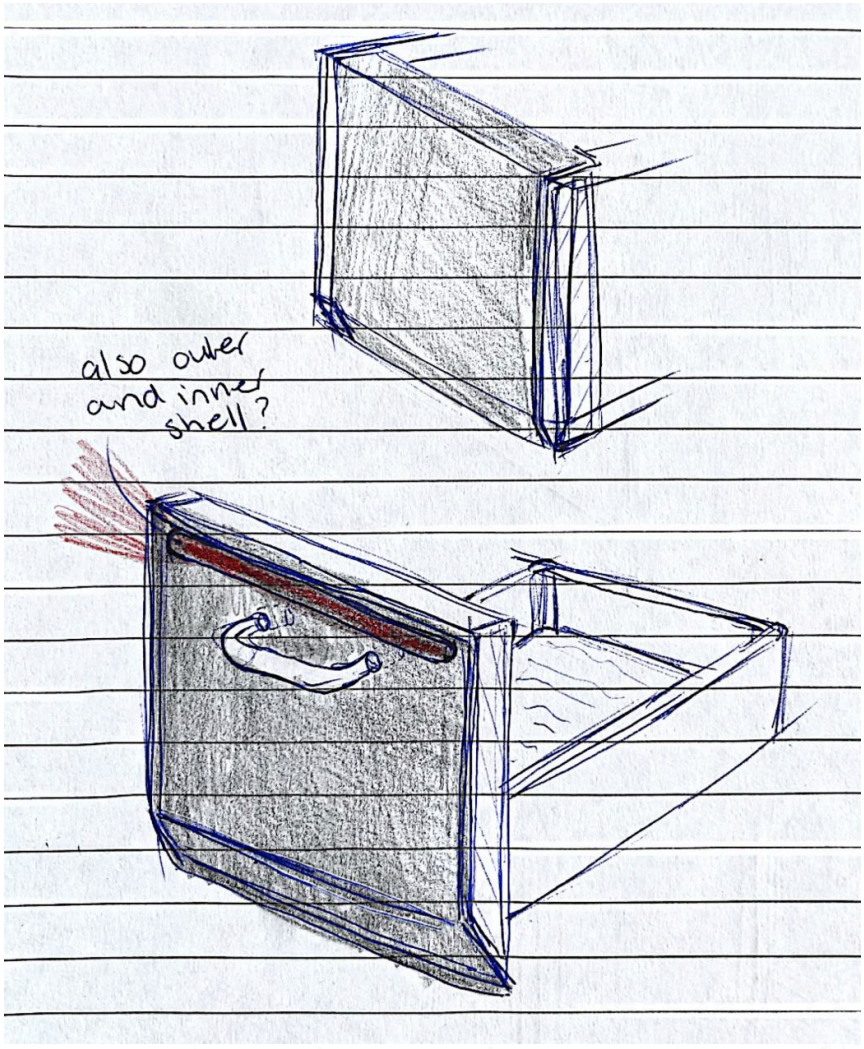
also outer and inner shell?

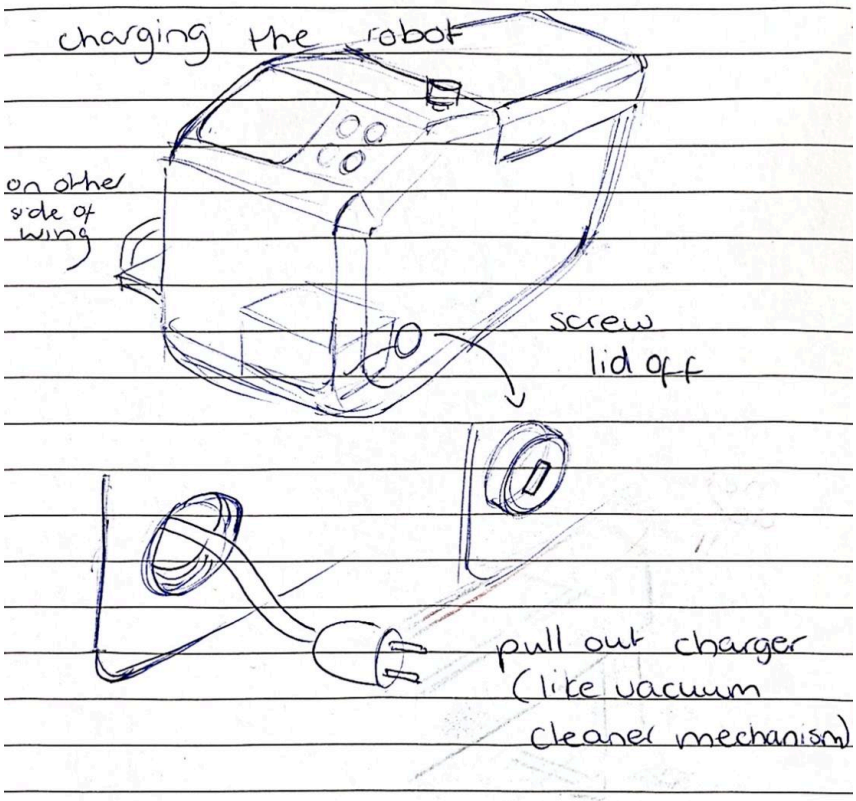
charging the robot
on other side of wing
screw lid off
pull out charger (like vacuum cleaner mechanism)

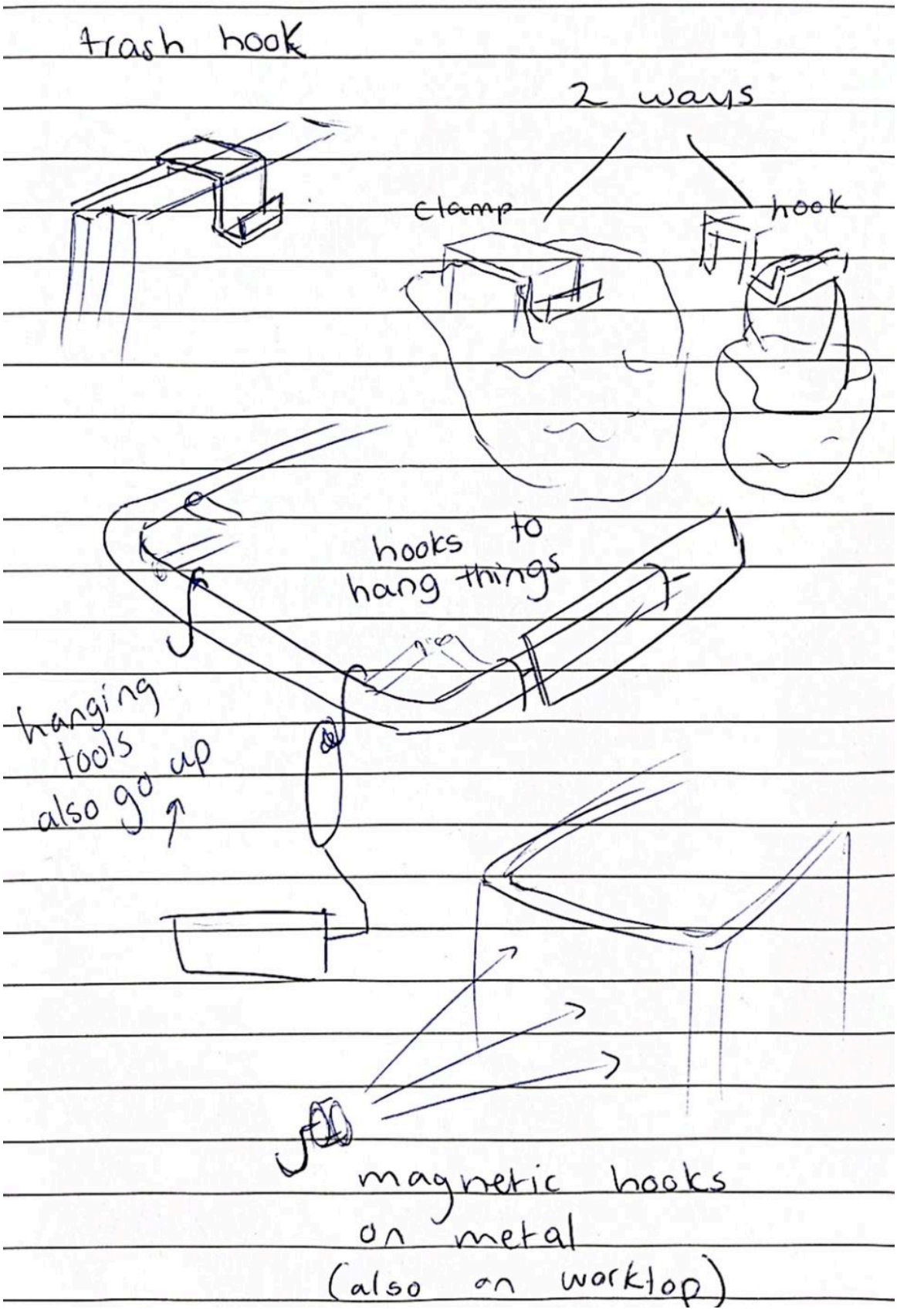
trash hook
2 ways
clamp
hook
hooks to hang things
hanging tools also go up
magnetic hooks on metal (also on worktop)

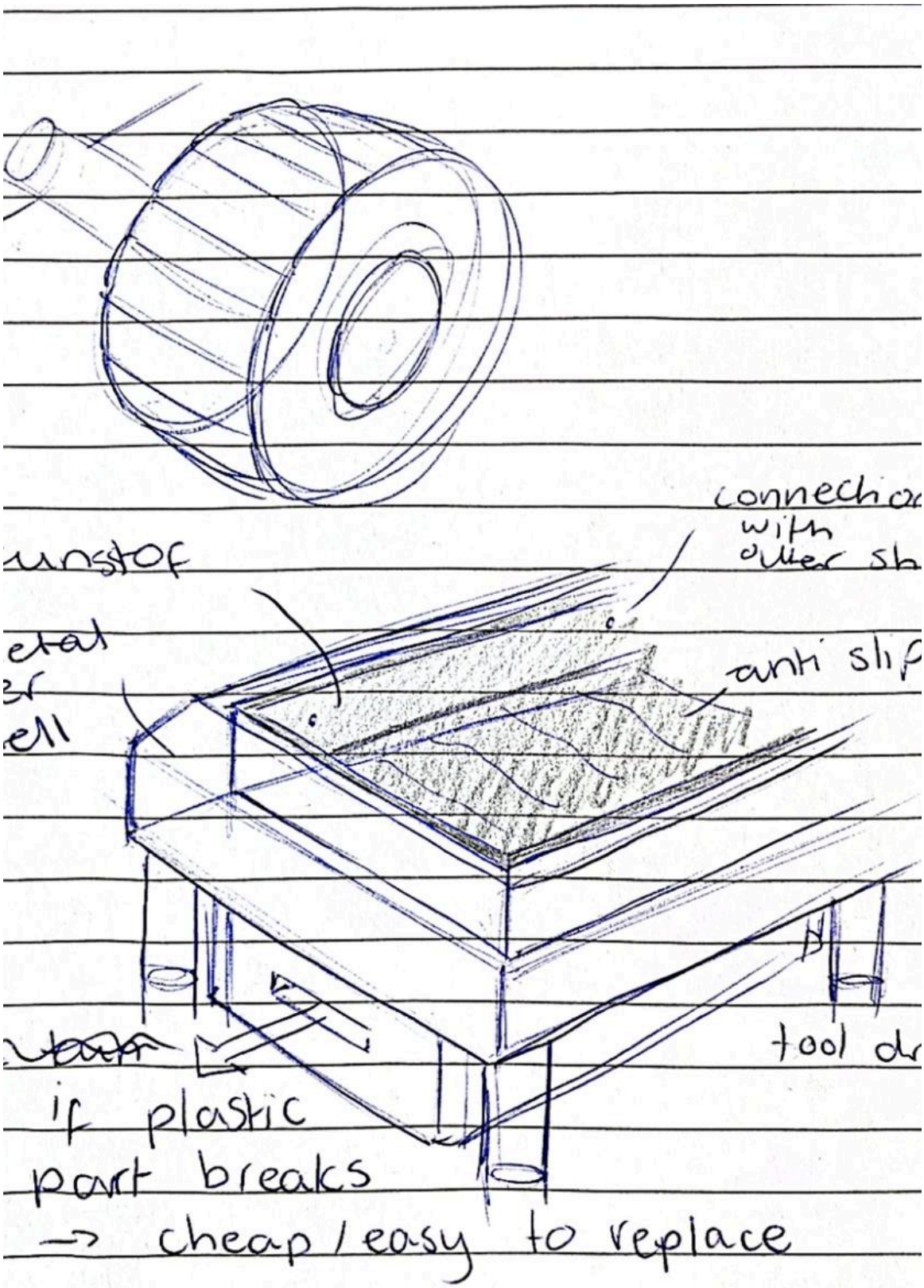
connection with outer sh
anti slip
tool dr
if plastic part breaks
→ cheap / easy to replace

APPENDIX V. COST ESTIMATION

General components

- 4x wheels
  - 30 euro per stuk = 120 euro
  - https://www.kippersrijssen.nl/product/los-wiel-200-x-67mm-massief-rubber
- Bumper
  - 5 euro
- Depth camera
  - 263 euro
  - https://tweakers.net/pricewatch/1169043/intel-realsense-depth-camera-d415.html?utm_source=google&utm_medium=css&utm_campaign=organic
- Lidar sensor
  - 106 euro
  - https://www.elektor.nl/products/ydlidar-x4pro-lidar-360-degree-laser-range-scanner-10-m
- 2x Ultrasonic distance sensors
  - 5 euro each (=10 euro)
  - https://nl.farnell.com/en-NL/multicomp/hc-sr04/ultrasonic-sensor-40khz-4-5m/dp/4162009
- Battery
  - https://www.battery-direct.com/apc-rbcbx500-bd1.html
  - 50 euro
- Power converter
  - 3 euro
  - https://www.tinytronics.nl/en/power/voltage-converters/buck-(step-down)-converters/dc-dc-ajustable-step-down-buck-converter-lm2596-3a
- Power supply retractable cable
  - https://weidantech.en.made-in-china.com/product/dvtmRcQPqWYp/China-EU-2pin-Plug-to-Figure-8-Power-Supply-Retractable-Cable.html
  - .20 dollar minimaal 500 stuks
- Back-drivable electronic motors
  - $80 ×2 = ~170 euro
  - https://www.precisionmicrodrives.com/product/722-400
- Front lights and back lights
  - 13 euro x2 = 26 euro
  - https://www.amazon.nl/Waterdichte-LED-Verlichting-LED-Onderwaterverlichting-Interieurverlichting-Navigatieverlichting/dp/B097MQ3PQM
- Microcontroller (Rasberry Pi)
  - https://www.amazon.nl/Raspberry-Pi-SC1111-5-4GB/dp/B0CK3L9WD3/
  - 72 euro

- Wireless Wi-Fi module
  - 33 euro
  - https://www.antratek.nl/wifi-esp32-module-with-2-relays
- Microphone module
  - 3,50
  - https://www.conrad.nl/nl/p/1485297
- Voice recognition module
  - https://www.ebay.co.uk/itm/388115272150
  - 23 pounds for 1 piece = ~27 euro
- Speaker
  - 8 euro
  - https://www.amazon.nl/InduSKY-JST-PH2-0-Interface-Elektronische-Projecten/dp/B0894M97CJ

~900 euro

Functionalities

- 4x linear actuators (stroke 300mm)
  - 68 euro each (=272 euro)
  - https://nl.aliexpress.com/item/1005006477320402.html
- 2x motor drivers for the linear actuators
  - 16,50 euro (33 euro)
  - https://www.tinytronics.nl/nl/mechanica-en-actuatoren/motoraansturingen-en-drivers/dc-motoraansturingen-en-drivers/dc-motor-driver-2×7a
- Angle-adjustable construction lights
  - 65 dollar + 10 housing = 75 dollar = 66 euro
  - https://nedarcn.en.made-in-china.com/product/oFqGeDRcflWV/China-AC230V-AC100V-AC110V-LED-Construction-Site-Light-Strip-with-Stand-Safety-LED-Work-Light-Drum-for-Access-Light-Orientation-Light.html
- Battery charger
  - 104 euro
  - https://nl.rs-online.com/web/p/battery-chargers/2743031
- Clip for trash bag
  - 0.20 euro
  - Simple 3D printed part
- Magnetic hooks
  - 6,80 euro
  - https://www.amazon.nl/Magneethaken-magneethaken-cruisehaken-magnetische-koelkast/dp/B0CP9PFJS6/

Total costs functionalities ~484 euro

User interface

- Touchscreen monitor
  - https://www.amazon.nl/dp/B083S6RXDV/ref=sspa_dk_detail_1?pd_rd_i=B083S6RXDV&pd_rd_w=wSzbV&content-id=amzn1.sym.bf7f001b-5099-45e1-afec-b25205b4c329&pf_rd_p=bf7f001b-5099-45e1-afec-b25205b4c329&pf_rd_r=NKARTB18QKZ7SP93EJ9J&pd_rd_wg=Re77d&pd_rd_r=b0e334cc-dc39-4eac-bc00-033e27ae5d34&s=electronics&sp_csd=d2lkZ2V0TmFtZT1zcF9kZXRhaWw&th=1
  - 60 euro (7-inch)
  - Krasbestendig en waterproof
- Humidity and temperature sensor
  - https://nl.farnell.com/en-NL/dfrobot/dfr0067/temp-humidity-sensor-brd-arduino/dp/2946103?gad_source=1&gclid=Cj0KCQjw5azABhD1ARIsAA0WFUF9V5UD3sT_CQtiJ_jSJv_kGZJpl4UxygueT5p2a6X4UeR4bY4YJUsaAsQzEALw_wcB&CMP=KNC-GNL-GEN-PLA-Standard-Shopping&gbraid=0AAAAD8yeHkDgl5OqWA-62ucj4mOmo77F&gross_price=true
  - 6,50 euro
- 2x Battery indicators (OLED display)
  - 6,50 euro each (=13 euro)
- Up- and down button lifting mechanism
  - 4 euro
- 2x On- off buttons construction light
  - 0,50 euro each (=1 euro)
- On- off button robot
  - 5 euro
- Key lock
  - 12 euros (TinyTronics)
- Emergency button
  - 5.50 euro (TinyTronics)

Total costs user interface ~107 euro