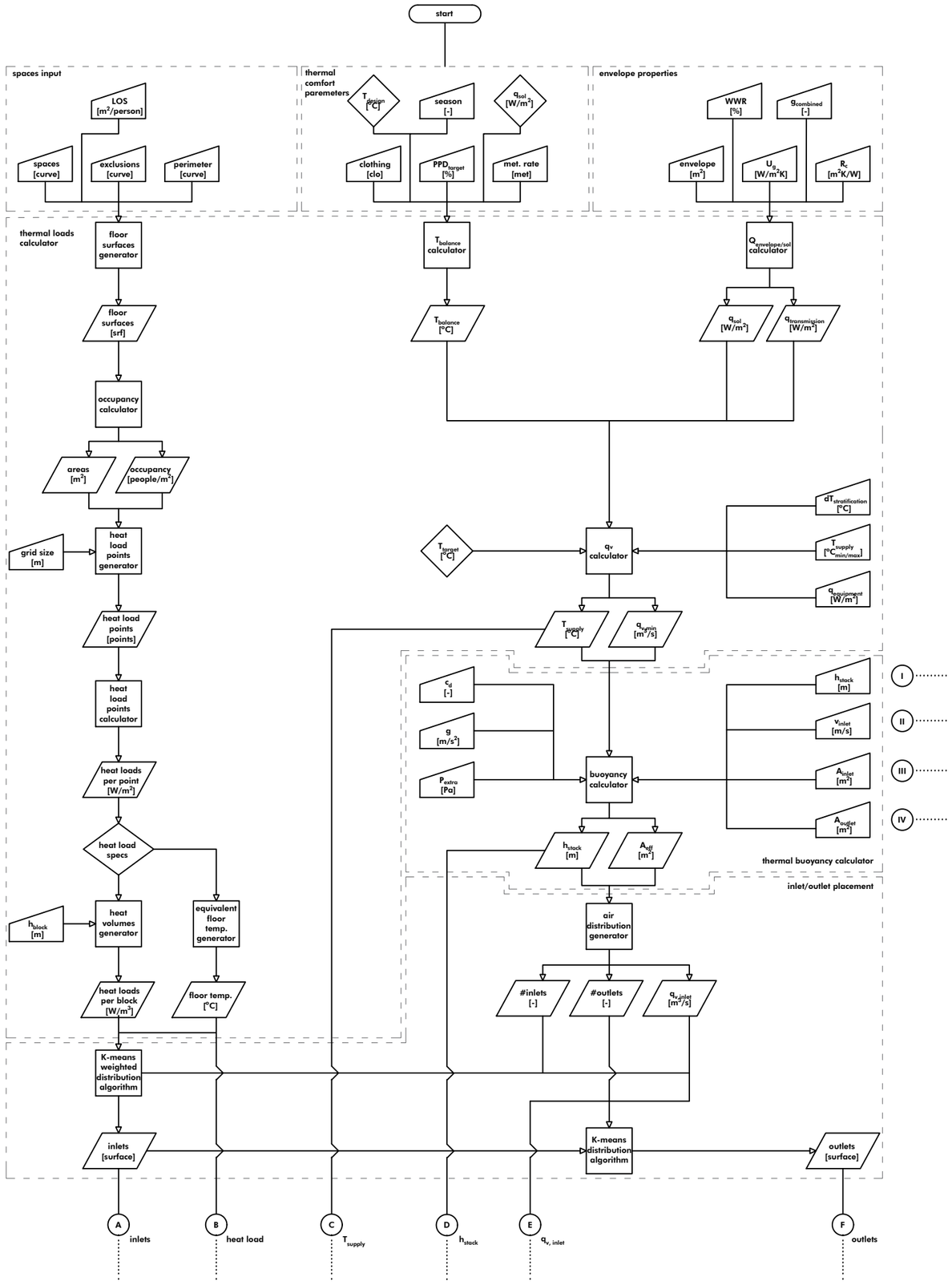
start
spaces input
LOS [m²/person]
spaces [curve]
exclusions [curve]
perimeter [curve]
thermal comfort paremeters
T design [°C]
season [-]
q sol [W/m²]
clothing [clo]
PPD target [%]
met. rate [met]
envelope properties
WWR [%]
g combined [-]
envelope [m²]
U g [W/m²K]
R c [m²K/W]
thermal loads calculator
floor surfaces generator
floor surfaces [srf]
occupancy calculator
areas [m²]
occupancy [people/m²]
grid size [m]
heat load points generator
heat load points [points]
heat load points calculator
heat loads per point [W/m²]
heat load specs
h block [m]
heat volumes generator
equivalent floor temp. generator
heat loads per block [W/m³]
floor temp. [°C]
K-means weighted distribution algorithm
inlets [surface]
T balance calculator
T balance [°C]
Q envelope/sol calculator
q sol [W/m²]
q transmission [W/m²]
dT stratification [°C]
T target [°C]
q v calculator
T supply min/max [°C]
q equipment [W/m²]
T supply [°C]
q v min [m³/s]
c d [-]
g [m/s²]
P extra [Pa]
buoyancy calculator
h stack [m]
v inlet [m/s]
A inlet [m²]
A outlet [m²]
h stack [m]
A eff [m²]
thermal buoyancy calculator
inlet/outlet placement
air distribution generator
#inlets [-]
#outlets [-]
q v inlet [m³/s]
K-means distribution algorithm
outlets [surface]
I
II
III
IV
A inlets
B heat load
C T supply
D h stack
E q v, inlet
F outlets

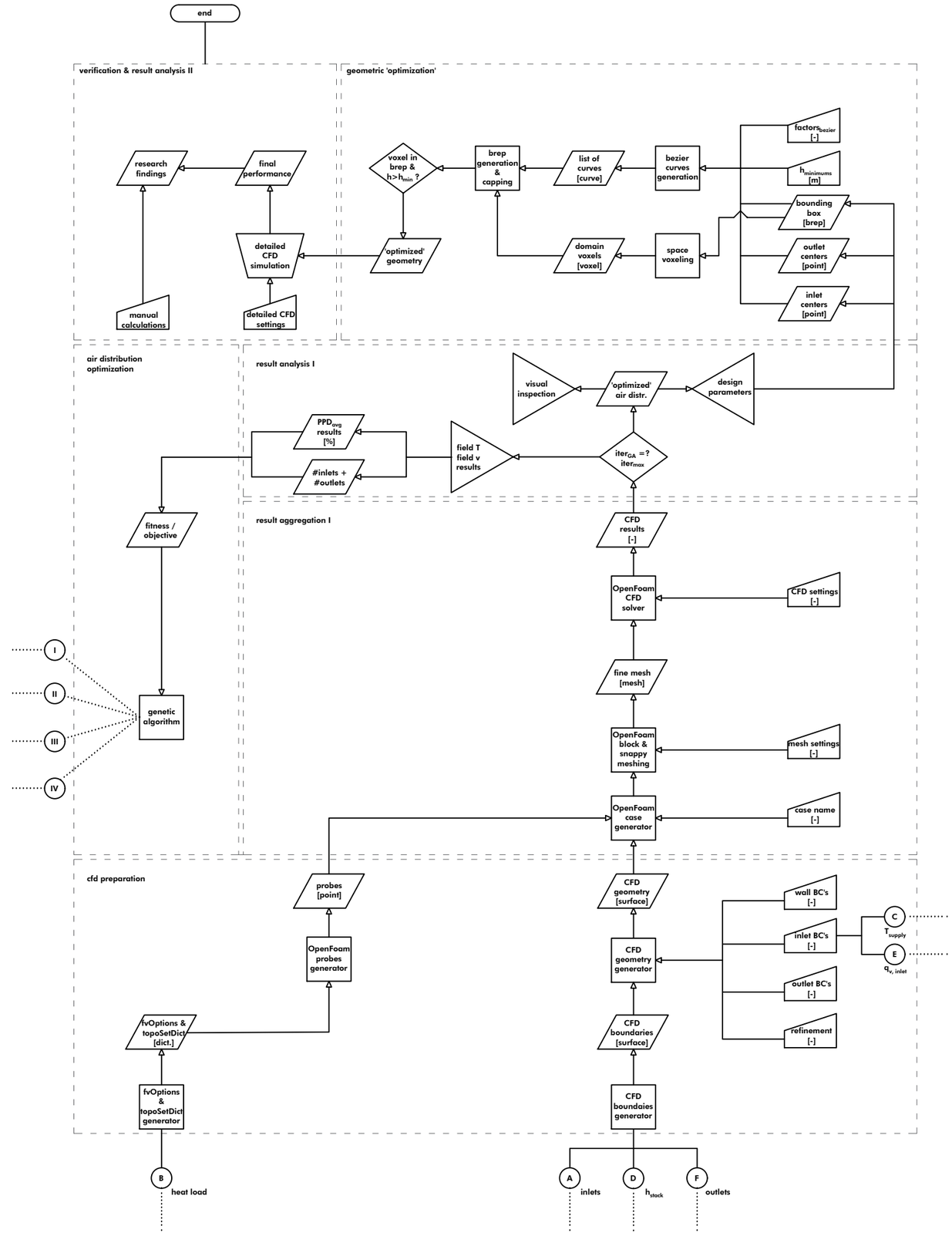
end
verification & result analysis II
research findings
final performance
manual calculations
detailed CFD settings
detailed CFD simulation
geometric 'optimization'
voxel in brep & h>h min ?
brep generation & capping
list of curves [curve]
bezier curves generation
factors bezier [-]
h minimums [m]
bounding box [brep]
outlet centers [point]
inlet centers [point]
'optimized' geometry
domain voxels [voxel]
space voxeling
air distribution optimization
result analysis I
visual inspection
'optimized' air distr.
design parameters
PPD avg results [%]
#inlets + #outlets
field T field v results
iter GA =? iter max
fitness / objective
result aggregation I
CFD results [-]
OpenFoam CFD solver
CFD settings [-]
fine mesh [mesh]
OpenFoam block & snappy meshing
mesh settings [-]
genetic algorithm
OpenFoam case generator
case name [-]
cfd preparation
probes [point]
OpenFoam probes generator
CFD geometry [surface]
wall BC's [-]
inlet BC's [-]
outlet BC's [-]
refinement [-]
CFD geometry generator
CFD boundaries [surface]
fvOptions & topoSetDict [dict.]
fvOptions & topoSetDict generator
CFD boundaies generator
I
II
III
IV
C T supply
E q v, inlet
A inlets
B heat load
D h stack
F outlets