TU Delft

Delft University of Technology

Document Version
Final published version

Licence
CC BY

Citation (APA)
Poplavskaya, K., & de Vries, L. (2019). Distributed energy resources and the organized balancing market: A symbiosis yet? Case of three European balancing markets. *Energy Policy*, *126*, 264-276. https://doi.org/10.1016/j.enpol.2018.11.009

Important note
To cite this publication, please use the final published version (if applicable).
Please check the document version above.

Copyright
In case the licence states “Dutch Copyright Act (Article 25fa)”, this publication was made available Green Open Access via the TU Delft Institutional Repository pursuant to Dutch Copyright Act (Article 25fa, the Taverne amendment). This provision does not affect copyright ownership.
Unless copyright is transferred by contract or statute, it remains with the copyright holder.

Sharing and reuse
Other than for strictly personal use, it is not permitted to download, forward or distribute the text or part of it, without the consent of the author(s) and/or copyright holder(s), unless the work is under an open content license such as Creative Commons.

Takedown policy
Please contact us and provide details if you believe this document breaches copyrights.
We will remove access to the work immediately and investigate your claim.

This work is downloaded from Delft University of Technology.

Energy Policy 126 (2019) 264–276

Contents lists available at ScienceDirect

Energy Policy

journal homepage: www.elsevier.com/locate/enpol

Distributed energy resources and the organized balancing market: A symbiosis yet? Case of three European balancing markets

Ksenia Poplavskaya[a,b,*], Laurens de Vries[b]

[a] AIT Austrian Institute of Technology, Center for Energy, Electric Energy Systems, Giefinggasse 2, 1210 Vienna, Austria
[b] Delft University of Technology, Faculty of Technology, Policy, and Management, 2600 GA Delft, the Netherlands

ARTICLE INFO

Keywords:
Balancing market
Market design
Distributed energy resources
Balancing service provider
Regulation
Market efficiency

ABSTRACT

Thanks to new technological advancements and EU policy impulse, distributed energy resources (DER) are poised to become a viable alternative to conventional electricity generation for the provision of balancing services to transmission system operators. In this paper we show that the design variables that affect DER access to and participation in the organized balancing market include different features of auction configuration as well as a number of formal, administrative and technical aspects of market design. In a comparative case study of the balancing markets in Austria, Germany and the Netherlands, we determine the extent to which a given market design effectively facilitates DER participation. To structure this analysis, we designed an assessment framework that provides a comprehensive tool for the assessment of balancing markets in Europe vis-à-vis DER participation. Our results show that flexible pooling conditions, a higher bidding frequency and product resolution, and the authorization of non-precontracted bids, among others, can significantly ease DER integration in the market. Different design variables, however, can enhance or neutralize each other's effects, so their interrelations need to be taken into account in order to achieve an improved and harmonized balancing market design.

1. Introduction

The increasing availability and decreasing costs of distributed energy resources (DER) raise the question of how these resources can effectively contribute to achieving such policy goals as consumer empowerment and market efficiency. DER are small-scale electricity generation units, including variable renewable energy resources (vRES), wind turbines and photovoltaics, and other distributed generation as well as storage and demand response connected to the distribution network.

A major task of the transmission system operator (TSO) is to preserve balance between energy supply and demand at all times. In the synchronous area of Continental Europe, the TSO maintains stable frequency levels at 50 Hz by regulating energy infeed or withdrawal. Under the current electricity market deregulation provisions, balancing services preferably have to be procured in a market-based way (European Commission, 2009). In the balancing auction, the TSO acts as a single buyer and procures capacity to guarantee that enough reserves are committed and activates balancing energy in case of actual frequency deviations. The three standard balancing products (European Commission, 2017, Art. 2(28)) are frequency containment reserve (FCR), automatic frequency restoration reserve (aFRR) and manual frequency restoration reserve (mFRR), which are activated successively and differ according to the speed and duration of activation. These can be deployed either to increase energy infeed or reduce energy withdrawal if the system is undersupplied or vice versa if the system is oversupplied. Balancing service providers (BSPs) are then remunerated either for capacity alone or for capacity and energy delivered.

In the evolving power system, the available capacity of traditional BSPs, conventional generators, has been dwindling (Böttger et al., 2015) while more vRES with limited predictability have been integrated in the energy system, which increases the complexity of system balancing. Furthermore, balancing markets are often not fully liberalized and highly concentrated (Hirth and Ziegenhagen, 2015; Ocker et al., 2017; Pérez-Arriaga, 2013). Thanks to technological advances, new actors and emerging DER capable of balancing service provision can help to boost competition, reduce overall balancing costs, and provide the needed flexibility for efficient vRES integration. Creating appropriate incentives for all market participants remains a challenge and requires a careful rethink of current market design.

In the view of these developments, we set an objective to address the question of whether current balancing market rules sufficiently facilitate the adoption of DER for system balancing, as encouraged by the EU policy and regulation, and the ways in which market design can

* Corresponding author at: AIT Austrian Institute of Technology, Center for Energy, Electric Energy Systems, Giefinggasse 2, 1210 Vienna, Austria.
E-mail address: ksenia.poplavskaya@ait.ac.at (K. Poplavskaya).

https://doi.org/10.1016/j.enpol.2018.11.009
Received 31 May 2018; Received in revised form 1 November 2018; Accepted 5 November 2018
0301-4215/ © 2018 The Authors. Published by Elsevier Ltd. This is an open access article under the CC BY license (http://creativecommons.org/licenses/BY/4.0/).

be improved.

To provide a comprehensive answer to this question we first describe the general principles of the balancing market in the EU and identify all market design variables relevant for DER integration in Section 3. These feed into an assessment framework, which structures the evaluation for a specific balancing market to deepen the understanding of the requirements placed on balancing resources as well as its alignment with the EU policy objectives and regulatory framework.[1] A comparative analysis of the balancing markets in Austria, Germany and the Netherlands is used for the case study presented in Section 4. In Section 5 we analyze the results of the case study focusing on the way the suggested adjustments can lead to a greater integration of DER and improve the functioning of the balancing market from the point of view of non-discrimination and economic efficiency. We then sum up the lessons learned from the case study identifying positive developments and potential barriers for DER. Finally, in Section 6 we review the key differences in the balancing markets in the three countries and provide overall conclusions and policy implications.

2. Literature review

Large differences in national balancing market designs exist among EU countries, as is shown in a survey by the European Network of Transmission System Operators for Electricity (ENTSO-E, 2017). This heterogeneity stems from their historical developments, generation mixes and cross-border interconnections. In the face of these differences, the question of an optimal balancing market design has been raised in the work of Van der Veen and Hakvoort (2016), Müsgens et al. (2014), Ocker et al. (2016), Vandezande et al. (2010) and Abbasy (2012), among others. Van der Veen (2012) provided a comprehensive and systematic overview of design variables for balancing markets. Building upon it, Van der Veen and Hakvoort (2016) discussed the tradeoffs and synergies among the identified performance criteria and the uncertainty associated with the choice of design settings. Borne et al. (2018) pioneered the assessment of the balancing market from the point of view of access facilitation for distributed sources of flexibility. They proposed a modular framework and identified some barriers to entry for DER and existing best practices, focusing mainly on the integration of electric vehicles for FCR and aFRR. The modules included rules toward the aggregation of DERs, rules defining the products on the market and the payment scheme of grid services (Borne et al., 2018).

On the other hand, the future significance of DER has been widely recognized. Researchers, EU policy-makers, the industry and EU-funded projects call for creating such conditions so as to enable system operators and market actors to extract maximum value from DER for system services and market participation (e.g. Dragoon and Papaefthymiou, 2015; EG3 Smart Grids Task Force, 2015; SWECO, 2015). The recently adopted Commission Regulation establishing a Guideline on Electricity Balancing (EBGL) emphasizes market-based procurement of balancing services without “undue barriers to entry for new entrants” (European Commission, 2017, Art. 3.1 (e)). It explicitly refers to enabling aggregated DER, including vRES and storage facilities to participate in ancillary service provision (Art. 3.1 (f, g)). The Clean Energy for All Europeans Package,[2] issued by the European Commission in November 2016, echoes many of the provisions in the EBGL with respect to the balancing market, sets customers as the centerpiece and encourages aggregation.

While technologically feasible, the economic viability of DER depends on costs, consumer acceptance, range of provided services as well as on the current market rules and regulatory regime. There is an indication that the potential of small-scale balancing resources may be sufficient to meet the overall demand for balancing reserves (TenneT, 2017). Yet, a number of studies found that constraining requirements in today's short-term market design, still largely tailored to traditional power plants, places DER at a competitive disadvantage (e.g. CE Delft, 2016; Borne et al., 2018). Research reveals that entry barriers for DER can be manifested in a number of ways, such as formal restrictions of certain groups of providers, administrative restrictions, obscure procedures or restrictive technical requirements. At a later stage, if DER are prequalified to enter the balancing market, their participation and profitability can be affected not only by the auction configuration but also by applicable remuneration rules, tariffs and network charges, as discussed by Kollau and Vögel (2014). Most research therefore addressed only some aspects deterring market integration of DER. Design variables such as minimum bid size (e.g. Borne et al., 2018; Koliou et al., 2015; SWECO, 2015), contracting periods and product symmetry (e.g. Borne et al., 2018; Koliou et al., 2015) have received much attention while others – not less relevant – seem to have been overlooked. The latter include, for instance, product resolution and the authorization of bids that were not precontracted during the procurement of balancing capacity, as will be discussed below.

3. Assessment framework

We build upon existing research to provide a structured, qualitative evaluation of the degree of DER integration in the balancing market that takes both the market design and regulatory developments into account with the goal of providing EU-relevant recommendations for market design. We continue the work of Borne et al. (2018) and other researchers and present an overview of the design variables related to both market access and the market configuration that are specifically relevant for DER participation. We include all standard balancing products and analyze how each design variable is addressed in the EU regulatory framework.

Our framework can be applied to any EU country and will help to decompose the design of a balancing market and identify specific inefficiencies and ways of improving it. It is meant to aid decision-makers to comprehensively evaluate the level of DER integration, to determine how amenable a given balancing market design is to DER participation and to which extent it is aligned with the EU prescriptions. The latter is particularly important in the light of ongoing balancing market integration and because the harmonization of rules is a major policy goal.

The aspects covered in the framework address market access from the formal, administrative and technical points of view as well as the configuration of the balancing auction as it affects market participation and revenue generation. These aspects are divided into types of requirements (Table 1, first column) and are subdivided into specific design variables (second column). They were identified through a comprehensive analysis of the conditions that are placed on participants in market environments in a number of European countries. It is based on the work conducted by ENTSO-E (2017), Van der Veen (2012) and Abbasy (2012) as well as on the pertinent regulation, network codes, BSP agreements and the insights described in the previous section. The options presented in the third column are the ones that currently apply in EU countries (based on Ocker et al., 2016, ENTSO-E, 2017 and national network codes). They are contrasted with the respective requirements set out in the current regulatory framework at the EU level in the fourth column.

In the following, we describe the groups of design variables and the associated options that we present in Table 1.

[1] This paper presents the state of regulation as of beginning of 2018. The ongoing changes in the European and national regulatory landscapes outpace their documentation; these changes, however, do not fundamentally affect the results of the analysis presented in this work.

[2] This package presents a compendium of communications, directives and regulations proposed by the European Commission and meant to substitute – upon its adoption – the current Third Energy Package: http://eur-lex.europa.eu/legal-content/en/TXT/?uri=CELEX:52016DC0860.

Table 1
Assessment framework.

	Group	Variable	Examples of OPTIONS	Specification in the EU Network codes or other EU legislation
Market access	**Formal access requirements**	1. Explicit restrictions for certain types of service providers	Participation restricted according to e.g. size, technology, connection level, demand side/ no restrictions	Non-discriminatory approach to all providers, including vRES, demand side, storage and any kind of aggregated facilities (EBGL, Arts. 3.1, 5 & 18.4)
		2. vRES access to the balancing market	Allowed / not allowed	
		3. Capacity provision	Mandatory / voluntary	Market-based procurement (EBGL, Art. 3.1(e))
		4. Specific products for DER	Yes / no	TSOs should justify why standard products are not sufficient and specific products will not create market distortions (EBGL, Art. 26)
	Administrative aspects	5. Pooling	Allowed / not allowed	Should be allowed (EBGL, Art. 18.4)
		6. Approach to prequalification	Unit-based / pool-based	Defined in the national regulation
		7. Explicit portfolio requirements	Restrictions apply / no restrictions	
		8. Additional agreements	Obligatory / not obligatory	No obligation to see a customer's supplier's agreement; independent aggregation should be allowed (COM(2016) 864, Art. 13)
	Technical prequalification criteria	9. Activation speed & duration	The set and the extent of the applicable requirements varies greatly depending on the country in question and is determined by the TSO	For FCR as soon as possible; for aFRR activation in maximum 30 s (further specifications in Arts. 154.7 and Art. 158.1d of the System Operation Guideline)
		10. Ramp rate		Defined by the TSO
Auction configuration	**Bid-related requirements**	11. Minimum bid size	300 kW – 50 MW	Defined in the national regulation
		12. Bid symmetry	Symmetrical bidding / Asymmetric bidding	Asymmetric at least for secondary and tertiary reserve (EBGL, Art. 32.3 & COM (2016) 861, Art. 5.9)
		13. Procurement of capacity & energy	Split/joint capacity & energy bids	Split (EBGL, Art. 16.6): no pre-determination of the energy price in the capacity contract
		14. Energy bid adjustment	Allowed / not allowed	Shall not be allowed after balancing energy gate closure time (EBGL, Art. 24.3)
		15. Non-precontracted energy bids	Allowed / not allowed	Allowed for BSPs that passed the prequalification (EBGL, Art. 16.5) and not discriminated against (EBGL, Art. 16.7)
	Time-related characteristics	16. Frequency of bidding - capacity	Once a year – once every 15 minutes	"The contracting should be performed for not longer than one day before the provision of the balancing capacity and the contracting period shall have a maximum period of one day" (COM(2016) 861, Art. 5.9)
		17. Frequency of bidding - energy	Once a year – once every 15 min	"Market participants shall be allowed to bid as close to real time as possible" (COM(2016) 861, Art. 5.5)
		18. Frequency of market clearing – capacity	Once a year – once every 15 min	Defined in the national regulation
		19. Frequency of market clearing & activation - energy	1 h – 15 min	As close as possible to real time, within the limits of feasibility and "not before the intraday cross-zonal gate closure time" (EBGL, Art. 24.2)
		20. Product resolution	1 h – 1 year	Defined in the national regulation
	Remuneration	21. Pricing rule	Regulated price / Pay-as-bid / Marginal pricing	Marginal pricing to be applied to the procurement of energy bids for FRR (EBGL, Art. 30 (1a)) unless all TSOs determine that a different pricing methodology is more efficient (EBGL, Art. 30.5).
		22. Special support schemes for balancing service provision	Not applied / applied only for e.g. only certain voltage levels; only for certain types of providers	Defined in the national regulation

3.1. Market access

Formal access requirements: This aspect refers to explicitly specified obligations or restrictions of certain BSPs for market entry. Here, we review whether the principle of non-discrimination or a level playing field is formally observed.

1. *Explicit restrictions for certain types of service providers* – Such restrictions can be based on size or type of technology or connection level. Besides, if load participation is allowed, it can still be restricted to certain load types, such as big industrial loads.
2. *vRES access to the balancing market* – In many EU balancing markets RES are not allowed to participate due to their intermittency and only moderate predictability. In some countries, e.g. in Belgium, more lenient rules are applied to RES (Chaves-Ávila, 2014) while in some countries such participation, though not prohibited, is still in test phase, e.g. Germany (50 Herz et al., 2017).
3. *Capacity provision* – Power plants of over a specific size may be obliged to provide balancing services.
4. *Specific products for DER* – As opposed to standard products, these products are meant to extract value from a specific type of technology or provider, e.g. demand response.

Administrative aspects: These are concerned with the ways DER are organized, operated and with the actors affecting their participation. General constraints for most of DER are the need for aggregation or pooling due to their relatively small individual capacities. DER willing to participate in the balancing market may also be constrained by other market participants, suppliers and balance responsible parties (BRPs) who may limit DERs' choice of an aggregator or may impose additional charges on DER owners or operators (Poplavskaya, 2018).

5. *Pooling* – Regulation may explicitly allow or prohibit the joint use of DER. Whether pooling is allowed or not affects the possibility for BSPs to extend technical capabilities of individual units or integrate different types of reserve units in their portfolio.
6. *Approach to prequalification* – BSPs' portfolios are obliged to pass technical requirements for balancing service provision by either prequalifying each unit separately (unit-based) or the portfolio as a whole (portfolio-based).
7. *Explicit portfolio requirements* – Restrictions may, for instance, apply to the number of units, mixing different types of components in the same portfolio (RES, conventional, flexible loads, storage, etc.).
8. *Additional agreements* – Art. 2(15) of COM(2016) 864 defines "independent aggregator" as "an aggregator that is not affiliated to a supplier or any other market participant" (European Commission, 2016). A requirement to obtain authorization of other market participants may restrict independent aggregator's actions and ability to participate in the balancing market. Such consent may have to be obtained from a consumer's supplier or from a BRP, entity responsible for submitting generation and/or consumption schedules to the TSO and settling portfolio imbalances.

Technical prequalification criteria: An inherent feature of balancing markets is that their rules and requirements are to a large extent mandated by the technical characteristics of the power system. Upon reserving balancing capacity, TSOs procure it from prequalified BSPs. In other words, the balancing market is not universally accessible; instead, it is restricted to those BSPs that pass the prequalification process. These technical requirements are described in TSO framework documents and to some extent in the national network codes and relate to, among others:

9. *Activation speed and duration* – This variable determines how fast and for how long a committed balancing resource shall provide a balancing service.
10. *Ramp rate* – It refers to the minimum power gradient or the rate at which the output or consumption of a unit or a pool can be increased or reduced until full activation.

3.2. Auction configuration

This group of variables encompasses both the requirements placed on the bids for different balancing products and the temporal characteristics of the marketplace that BSPs face upon market entry. These characteristics do not only vary from country to country, but are also often different for each balancing product in the same country. They have implications for both the possibility to participate in the market and for the bid formulation.

Bid-related requirements:

11. *Minimum bid size* – The minimum acceptable bid to participate in the balancing market.
12. *Bid symmetry* – Deviations from the required frequency value can be positive or upward (in case of oversupply or overestimated demand) and negative or downward (for instance, in case of insufficient energy injection due to forecast errors or excess demand). Two types of adjustment, upward and downward, are therefore required for each of the three products. In some balancing markets, only symmetrical bids are accepted, i.e. bids that offer the same capacity in both directions, while in others it is possible to submit separate bids for upward and downward regulation.
13. *Procurement of capacity and energy* –If reserve capacity and balancing energy are procured jointly, it implies that the energy bid is already specified together with the capacity bid while the opposite is true for split procurement.
14. *Energy bid adjustment* – Some regulatory frameworks may allow BSPs to adjust their submitted energy bids, including after the gate closure of the bidding period.
15. *Non-precontracted energy bids* – Precontracted energy bids are bids that were submitted and awarded during capacity reservation. If non-precontracted (also called "free" or "voluntary" bids) are allowed, BSPs who did not participate in the capacity reservation stage still are allowed to submit bids for balancing energy.

Time-related characteristics:

16. *Frequency of bidding: capacity* – This variable determines how often bids for capacity are called and thus the duration of reservation, a period during which balancing capacity should be kept continuously available. In case the frequency of bidding is lower than the frequency of activation, the price stays the same in each activation period.
17. *Frequency of bidding: energy* – This variable can either equal the frequency of capacity bidding in case of joint procurement of capacity and energy or differ in case split procurement.
18. *Frequency of market clearing: capacity* – This variable determines how often a merit order of capacity bids is built and is normally the same as bidding frequency for capacity.
19. *Frequency of market clearing and activation: energy* – It is either equal to the frequency of bidding for energy or has a higher time resolution if the merit order for balancing energy is built more frequently.
20. *Product resolution* – This variable refers to the timeframe of subproducts traded within the same bidding period, for example, separate auctions can be held for different timeframes for upward and downward regulation (e.g. delivery of balancing energy in 4-h blocks).

Remuneration:

21. *Pricing rule* – This refers to the way awarded capacity and energy bids are remunerated, whether through a fixed payment, according

to the bid price (pay-as-bid) or according to the highest awarded bid in the merit order (so-called marginal or uniform pricing).

22. *Special support schemes for balancing service provision* – This includes considerations of whether special conditions are applicable only to certain types of providers such as reduced network tariffs or incentive payments, and whether DER can profit from them on par with other providers.

Thus, the assessment framework which we summarize in Table 1 presents the variables that specifically affect the integration of DER in the balancing market. It helps to assess how design choices impact the ability of DER to participate in the market, e.g. versus an incumbent BSP, and the extent to which the market design is aligned with EU policy objectives. It is furthermore a tool for making a comparative analysis of balancing regimes in the EU with a specific focus on the participation of new technologies and actors. Its application contributes to the study of market design and related incentives and is demonstrated in Section 4.

4. Comparative study of balancing market regimes in Austria, Germany and the Netherlands

In this section, we apply the framework to the balancing markets of three neighbouring EU countries, Austria, Germany and the Netherlands. All three countries are characterized by well-developed and quickly evolving organized markets for all balancing products, in contrast to a number of EU countries where mandatory provision of balancing services is still applied to at least some balancing products (ACER/CEER, 2017). The bids are activated according to the merit order, i.e. the cheapest bids are activated first, in line with the EBGL. National regulators have eased market access for flexible DER, for example by revising the prequalification criteria and bid requirements, which facilitated the entry of aggregated DER onto the balancing market, as will be shown in Section 3.1.

The three countries apply a so-called 'balancing group model', under which BRPs carry responsibility for the net imbalances of their portfolio of generation and/or demand. TSOs take a reactive approach to system balancing, addressing only the remaining imbalances. Each supplier or consumer must be part of a BRP portfolio, either directly or through an intermediary such as a supply company. As of January 2018, for FCR, aFRR and mFRR, respectively 7, 13 and 14 BSPs in Austria, 24, 37 and 52 BSPs in Germany and ca. 4, 10 and 10[3] BSPs in the Netherlands, have been prequalified for participation in the balancing market. The market design overview is based on the relevant national laws, decisions of the regulator and TSO websites, as well as TSO-BSP and BSP-BRP agreements that apply in the three countries.

4.1. Market access

An overview of the aspects related to formal requirements, aggregation and prequalification in the three countries is presented in Table 2. Design choices that are aligned with the EU regulatory framework, as described in Table 1, fourth column, in this and subsequent tables are marked green; those not regulated or not aligned are left unmarked.

Table 2 shows that in all three countries, load and storage participation are allowed by using the same market mechanism as generation. On the face of it, a level playing field is guaranteed to renewables, although the participation of vRES is not yet considered fully viable in Germany and is tested in a pilot phase for wind parks (50 Herz et al., 2017). Apart from standard balancing products, Germany employs specific products, immediately interruptible and quickly interruptible loads, to procure services from large industrial loads. The capacity provision is mandatory in Austria for power plants bigger than 5 MW only in case of failure to procure sufficient capacity after third call while an obligation to provide balancing in the Netherlands applies to power plants bigger than 60 MW in case of a failure to procure sufficient capacity.

While all the countries allow pooling, the conditions applicable to aggregators vary with regard to notification and consent of other market participants, BRPs and suppliers.

It is the prerogative of individual TSOs to define the exact technical prequalification criteria. In the case of DER, their fulfillment is strongly linked to the pooling conditions that are applied in a given country. Pooling facilitates compliance with the prequalification requirements, including the requirement to withhold capacity, for instance, for a weeks' time, as units are not obliged to reserve a given capacity individually but can rather "share the burden". A slower ramping rate of one unit can be compensated by a faster rate of another unit in the same pool. Individual technical units in a pool can be substituted by others in a way that service provision is not affected. In case energy reserves have been exhausted, they can be replenished and substituted by other reserves in the meantime.

4.2. Auction configuration

The configuration of the balancing auction affects the possibility of and incentives for DER to participate in the market. Table 3 provides an overview of the design choices in the three countries for the three balancing products, FCR, aFRR[4] and mFRR,[5] respectively, as of January 2018. Notably, for the provision of FCR only reserved capacity is remunerated, while for aFRR and mFRR both capacity and energy bids have to be submitted. Table 3 reveals differences in design choices not only on the country level but also on the product basis. These variables are subject to regular changes; for instance, the frequency of bidding and minimum bid sizes have been progressively reduced over the last years.

German and Austrian TSOs procure capacity and energy simultaneously, meaning that both prices must be included in the bid, although it is the capacity bid alone that determines which BSPs enter the merit order. In contrast, in the Netherlands, the balancing capacity and balancing energy markets are operated separately from each other.

Another specificity of the Dutch market is that it allows so-called non-precontracted energy bids. Unlike precontracted bids, these bids are only remunerated for the activation of balancing energy. They are combined with precontracted energy bids into a single merit order (TenneT, 2016). Finally, unlike its Austrian and German counterparts, the Dutch TSO does not foresee a capacity reservation stage for mFRR since this product is rarely activated in the Netherlands.

The timeline of the procurement and activation of balancing resources is illustrated in Fig. 1. It shows the market sequences for all the balancing products, bidding periods, number of auctions in each period and market clearing times. Adjusting energy bids is only allowed for mFRR bids in Austria, in the TSO's effort to reduce balancing energy prices. The bids can be reduced for upward regulation and increased for downward regulation. Currently, the bidding frequency in Austria and Germany for aFRR (which they procure jointly since June 2016) is weekly, but it is planned to be changed to daily with six 4-h products to align with mFRR starting from July 2018 (Bundesnetzagentur, 2017).

[3] Numbers according to the correspondence with the Dutch TSO. The exact number is not publicly available.

[4] Until 2016, aFRR was referred to as "regulating power" while mFRR as "reserve power" in the Netherlands. In the Germany-speaking countries, aFRR is called "secondary control" while mFRR is called "tertiary control".

[5] In the Netherlands, mFRR includes 1) schedule-activated reserves (balancing energy only no capacity bidding) and 2) directly activated mFRR ("emergency power"), a specific balancing product for which capacity is procured on a yearly and quarterly basis.

Table 2
Design choices in the countries of study related to the market access of DER.

Formal access requirements	Austria	Germany	Netherlands
Explicit restrictions for certain types of service providers	No restrictions	No restrictions	No restrictions
vRES access to the balancing market	Yes for wind (only FRR)	Yes for wind (in pilot phase)	Yes
Capacity provision	Mainly voluntary	Voluntary	Mainly voluntary
Specific products for DER	No	Yes (interruptible loads)	No
Pooling conditions			
Pooling	Allowed	Allowed	Allowed
Approach to prequalification	Pool-based	Pool-based	Unit-based for FCR, pool-based for aFRR & mFRR
Explicit portfolio requirements	One reserve pool can contain several reserve groups of max. 1,000 technical units	No restrictions according to pool size or technology	No specific pooling restrictions for aFRR or mFRR
Additional agreements	Notification and coordination with BRP's necessary; Supplier's agreement needed if he and aggregator belong to different balancing portfolios	Coordination with the BRP for the produced imbalances	BRP's notification and agreement required; currently no independent aggregators for balancing products
Technical prequalification criteria			
Activation speed & duration	FCR: reaction time of a few secs, full activation within max 30 secs for at least half an hour; aFRR: within a few secs; full activation within 5 min; mFRR: within 10 min. for 15 min.	FCR: reaction in a few secs, full activation within 30 secs for minimum 15 min.; aFRR: reaction in maximum 30 secs; full activation within 5 min; mFRR: reaction in maximum 5 min.; full activation within 15 min.	FCR: 50% activated in 15 secs; full activation within 30 secs; aFRR: response in 30 seconds, full activation within maximum 15 min.; mFRR: activation within 15 min.
Ramp rate	2% of rated output/min (for aFRR)	Minimum 2% of rated output (for FCR); for FRR – upon agreement with the TSO	Minimum 7% of the volume of the bid per minute for aFRR and mFRR

Table 3
Auction configuration for the procurement of three balancing products in Austria, Germany and the Netherlands.

FCR Bid-related requirements	Austria	Germany	Netherlands
Minimum bid size	1 MW (1-MW increments)	1 MW (1-MW increments)	1 MW (1-MW increments)
Bid symmetry	symmetrical	symmetrical	symmetrical
Timing-related characteristics			
Frequency of bidding - capacity	Once a week	Once a week	Once a week
Frequency of market clearing – capacity	Once a week	Once a week	Once a week
Product resolution	weekly	weekly	weekly
aFRR **Bid-related requirements**	**Austria**	**Germany**	**Netherlands**
Minimum bid size	5 MW (1-MW increments)	5 MW (1-MW increments)	min. 4 MW - max. 200 MW (1-MW increments)
Bid symmetry	asymmetric	asymmetric	asymmetric
Procurement of capacity & energy	Joint capacity & energy bids	Joint capacity & energy bid	split
Energy bid adjustment	no	no	no
Non-precontracted energy bids	no	no	yes
Time-related characteristics			
Frequency of bidding - capacity	Once a week	Once a week	Yearly and monthly
Frequency of bidding - energy	Once a week	Once a week	Every 15 min
Frequency of market clearing – capacity	Once a week	Once a week	Once a year & once a quarter
Frequency of market clearing & activation - energy	Every 15 min	Every 15 min	Every 15 min
Product resolution	12 hours (peak & off-peak for upward and downward)	12 hours (peak & off-peak for upward and downward)	15 min

(*continued on next page*)

Table 3 (*continued*)

mFRR Bid-related requirements	Austria	Germany	Netherlands
Minimum bid size	1 MW to 50 MW for the first bid and further bids between 5 MW and 50 MW (1-MW increments)	5 MW (1-MW increments)	4 MW to 200 MW (1-MW increments)
Bid symmetry	asymmetric	asymmetric	asymmetric
Procurement of capacity & energy	joint capacity & energy bids	joint capacity & energy bids	split
Energy bid adjustment	yes (possible D-1 from 11:00 till 15:00)	no	no
Non-precontracted energy bids	no	no	yes
Timing-related characteristics			
Frequency of bidding - capacity	Once a week and once a day	Once a day	no capacity reservation
Frequency of bidding - -energy	Once a week and once a day	Once a day	Every 15 min
Frequency of market clearing – capacity	Once a week and once a day	Once a day	n/a
Frequency of market clearing & activation - energy	Once per 15 min	Once per 15 min	Once per 15 min
Number of auctions	4 hours (12 separate auctions in total per day (separate for upward and downward))	4 hours (12 separate auctions in total per day (separate for upward and downward))	1
Renumeration	**Austria**	**Germany**	**Netherlands**
Pricing rule (remuneration of awarded bids: pay-as-bid (PaB) vs. marginal pricing (MP))	FCR: PaB for capacity; aFRR and mFRR: PaB for capacity and energy	FCR: PaB for capacity; aFRR and mFRR: PaB for capacity and energy	All: PaB for capacity; aFRR: MP for energy; mFRR: MP for energy
Special support schemes for balancing service provision	Reduced network usage fees or exemptions for some types of BSPs	Flexibility premiums for existing and flexibility allowances for new biogas plants	no

The contracting period of aFRR capacity in the Dutch balancing market is expected to be reduced to one month in 2018.

It is noteworthy that balancing energy prices cannot be changed for a whole week for FCR and aFRR in Austria and Germany and also for weekly mFRR in Austria. So even though the frequency of energy activation is the same in all the three countries, in Austria and Germany the same energy bids are used to build a merit order in each 15-min period of a product (one week, 12 h or 4 h). In contrast, only balancing capacity prices are submitted in the Netherlands in the first stage while different balancing energy prices can be submitted for any 15-min period, minimum one hour prior to activation (Fig. 1). The participating BSPs in the Dutch market are under obligation to bid their total pre-contracted volumes in the balancing energy market. In case of failure to do so, the TSO places bids for them (TenneT, 2016).

For FCR, only one auction takes place (encircled numbers in Fig. 1). As explained in Section 2, the number of auctions is linked to product

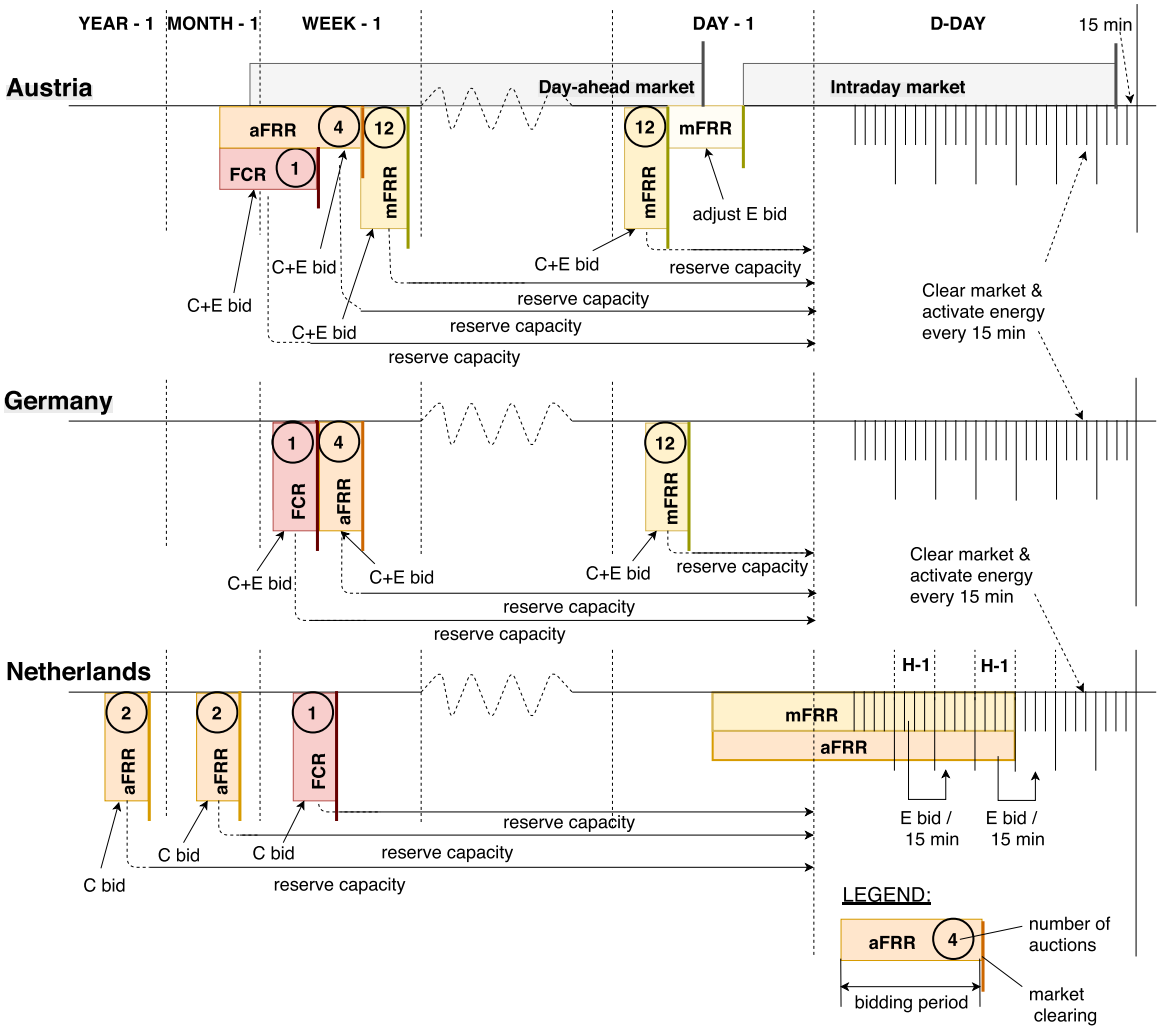

Fig. 1. Timing of the procurement of FCR, aFRR and mFRR (capacity (C) and energy (E)) products in the balancing markets in Austria, Germany and the Netherlands.

resolution within the same bidding period. In Austria and Germany separate auctions are held for peak and off-peak periods as well as for upward and downward regulation for aFRR. For mFRR, six separate 4-h-block auctions are held. No distinction between different time periods is made in the Dutch market.

Support schemes for certain groups of service providers are sometimes used to encourage participation in the balancing market. Following this logic, in Austria, market participants are offered reduced network usage fees if they provide balancing services. Units at the low-voltage level, however, are excluded from this provision (E-Control, 2017). Additionally, storage systems, acting both as generators and consumers depending on their operation mode, must pay for system losses charges twice, both in charging and discharging modes. Pumped hydro storage plants are the only storage systems exempted from such double charges thus far. In the meantime, in Germany, only biogas power plants are offered so-called flexibility premiums or allowances for services including balancing, pursuant to German Renewable Energy Acts (Bundesministerium der Justiz und für Verbraucherschutz, 2017) which led to a surge of biogas BSPs providing downward regulation.[6]

5. Analysis: Balancing market design for DER

The introduction of market mechanisms to procure balancing services was meant to provide equal opportunities to all balancing-capable actors, increase market efficiency and minimize the cost of balancing procurement. The challenge is to create the right incentives for market participants, given the large set of market access and auction configuration variables (Table 1). Having applied our framework to the case of the Austrian, German and Dutch balancing markets, in this section we analyze the effect of individual variables on DER integration and on the performance of the balancing market. We review how different measures for the adaptation of the market design can contribute to non-discrimination and economic efficiency in the balancing market. With respect to economic efficiency we focus on price efficiency, i.e. how well costs are reflected in market prices, and utilization efficiency, i.e. whether the cheapest providers are used for balancing, following the performance criteria identified in Van der Veen (2012, p. 57).

5.1. Non-discrimination

In countries where the provision of balancing services remains mandatory, large generation units are called on to restore system frequency. In contrast, Austria, Germany and the Netherlands procure balancing products in a market-based way. An organized market opens up opportunities for DER, including flexible loads, if they have not been excluded by formal restrictions on market entry. The adequacy of

[6] https://www.vdi-nachrichten.com/Technik-Wirtschaft/Preisverfall-Regelleistung (in German).

product characteristics and requirements for DER participation is often defined historically rather than justified by technical restrictions.

All three countries formally observe the non-discrimination principle and an EU policy goal by providing unrestricted access to all types of providers, guided only by the considerations of economic efficiency, but the interpretations vary slightly. For instance, the Netherlands is technology-neutral in granting both same rights and same responsibilities to all BSPs, including balance responsibility of all market participants, in contrast to Austria and Germany where vRES that are subsidized are not fully balance responsible. Yet, considering the low bidding frequency for reserve capacity and the low liquidity of the intraday market in the Netherlands, the market effectively favors traditional BSPs at the cost of RES and other DER. In this regard, an efficient intraday market can significantly facilitate the participation of DER, especially vRES, by allowing them to adjust their forecasts closer to real time.

Specific balancing products are not ruled out but must be justified, according to the EU legislation. Two products, immediately interruptible and quickly interruptible loads, are used in Germany, arguably to help big industrial interruptible loads provide balancing services. The bid sizes are still rather large, 5 MW, excluding potential smaller-scale, commercial and residential providers. If interruptible loads are in the end only rarely activated through this additional mechanism, the question arises of whether they should be dispensed with in favor of standardized products with democratized entry conditions for all types of loads. Current regulation in the three countries provides BSPs with sufficient freedom to determine the components and their number in the pool. This allows potential market participants to provide both downward and upward regulation and to accommodate technical constraints of DER better by, for example, aggregating different technologies.

Market actors in Austria and Germany are authorized to bundle resources from several balancing groups in a single portfolio. This is particularly beneficial for DER aggregators because it allows them to substantially expand their portfolio and improve their business case while lowering transaction costs. Independent aggregators in Austria and in Germany need to ensure that energy injections and withdrawals are duly notified and coordinated with the involved BRPs. In these countries, this approach has already been exploited by a number of independent aggregators (Poplavskaya and De Vries, 2018). Yet, an obligation to obtain an explicit BRP authorization may become an obstacle for aggregators since BRPs may not want to risk increasing their portfolio imbalances by accepting balancing responsibility for aggregators of DER. In the Netherlands, as long as aggregators do not take on the role of BRPs themselves, their entry into the market will remain limited (Poplavskaya and De Vries, 2018). Nor are Dutch aggregators currently allowed to pool resources from different balancing portfolios, unlike their German and Austrian counterparts, which can also significantly limit the pool size and consequently its flexibility potential.

Prequalification criteria are dictated by the technical system requirements and can be adapted less readily. Yet, there are no criteria described in Section 4 that inherently discriminate against DER, thanks to flexible pooling conditions which generally do not limit the size of the balancing pool or the involved technologies. The provision of reserve capacity requires stable power output throughout the ramping and activation periods. In cases in which the flexibility potential depends on usage patterns, such as thermal storage or e-mobility, the maximum available capacity will be reduced. DER technically can provide all product types along with regulation in both directions, depending on the technology or their combination. In the countries of study, DER are allowed to prequalify for aFRR and mFRR in aggregate, which significantly eases fulfillment of ramping and minimum capacity requirements. Yet, the prequalification for FCR is still unit-based in the Netherlands. Consequently, balancing provision from single batteries, one of the main candidates for FCR provision among DER, remains economically unfeasible due to their inability to maintain the required output over an extended period of time, such as a week, while avoiding depletion (Braam et al., 2016). As prequalification criteria are stipulated by individual TSOs, additional hurdles remain for BSPs willing to participate in several European balancing markets.

Finally, market design specifics may produce other disincentives that are not immediately observable. Similar to the prequalification criteria, the application of support schemes for BSPs is a prerogative of individual states. Although favorable network tariffs can theoretically motivate market actors to provide balancing services, such incentives are artificial and can produce distortionary effects if not extended to all types of BSPs. Since DER can provide the required services in a way similar to conventional technologies, a revision of applicable grid tariffs and other support schemes is needed to ensure that DER can profit from these on par with other providers. On the other hand, flexibility premiums granted to biogas plants in Germany did encourage their wider use for balancing, yet raise the question of why such an incentive is not applied to other technologies. Overall, any type of subsidization to a lesser or greater extent insulates its recipients from market signals and thus runs contrary the goal of higher market efficiency.

5.2. Economic efficiency

5.2.1. Bid-related requirements and market efficiency

DER can improve price and utilization efficiency of the balancing market can be improved in a number of ways. The size of the bids has a direct effect on competition in the balancing market since its volume is much smaller than that of the wholesale spot market, so even providers with relatively small bids may influence the market outcome (Abbasy, 2012). Allowing more participants helps to increase market liquidity and price efficiency. For market entry, the minimum bid size becomes less relevant, yet not unimportant, if pooling is unrestricted. The minimum bids for aFRR and mFRR (4–5 MW in Germany and the Netherlands) still require aggregators to have a large pool of small-scale providers to comply. Currently, only Austria offers a possibility to place a single 1-MW bid for mFRR. The German TSOs introduced special exceptions for smaller-scale BSPs allowing them to place single bids under 5 MW for aFRR since July 2018 (Bundesnetzagentur, 2017).

The requirement of symmetrical bidding can be a barrier for DER as some of these resources are only economically capable of downward regulation, for instance vRES and demand response. Symmetrical bidding in the three countries is required only for FCR. For the other two products asymmetric bidding is allowed in all three countries. This is in line with the regulatory requirements and can help increase utilization efficiency of available balancing resources.

Another way to extract value from DER would be to uncouple capacity and energy bids, which are currently required to be submitted jointly when balancing capacity is contracted in Austria and Germany. Joint bid submission implies that the energy price is locked in for the whole period of reservation (Fig. 1) and may therefore not adequately reflect the value of the energy at the actual time of activation. The requirement of joint capacity and energy bids may lead to a further distortion: since the bids are selected based on the capacity price alone, a BSP may be tempted to submit a very low capacity bid in combination with a very high energy bid. A low capacity bid then acts a “door keeper” ensuring a BSP's place in the merit order for balancing energy allowing them to potentially obtain windfall profits during the activation stage. Balancing energy bids then virtually sponsor artificially low capacity bids leading to inefficient prices and resource allocation. For this reason, balancing energy prices of thousands of euros per MW h are not uncommon in Austria and Germany.

In this context, non-precontracted energy bids can boost price efficiency. Already introduced in the Dutch balancing market, such bids set a *de facto* cap on balancing energy bids of precontracted BSPs since they run a higher risk of not being called if they bid too high. Besides, DER-aggregating BSPs often cannot participate in the capacity reservation stage due to forecasting challenges farther from real time. Non-

Table 4
Lessons learned from the Austrian (AT), German (DE) and Dutch (NL) balancing markets.

Positive features	Potential barriers
Market access	
Formal access requirements	
Market-based procurement of all balancing products (all)	
Technology-neutral, non-discriminatory approach to market participation (all)	
Administrative aspects	
Independent aggregation allowed (AT, DE)	Limited independent aggregation (NL)
Extensive pooling options (pool-based prequalification, pooling across balancing portfolios, etc.) (all)	Explicit agreement between an aggregator and a BRP needed for providers of aFRR and mFRR (NL)
Technical prequalification criteria	
Criteria possible to fulfil thanks to pooling conditions (all)	Heterogeneous prequalification criteria in the three countries
De facto no minimum unit capacity requirement for prequalification (all)	
Auction configuration: Bid-related requirements	
	Minimum bid size still high for DER to comply for aFRR and mFRR (all)
Non-precontracted bidders allowed to participate (NL)	Participation of non-precontracted capacities is not allowed (AT, DE)
Split capacity and energy bids and markets (NL)	Joint capacity and energy bidding (AT, DE)
High product resolution of several hours for aFRR and mFRR (AT, DE)	Gate closure time far ahead of real time (D − 1) (all)
Auction configuration: Time-related characteristics	
Daily auctions for mFRR (DE, AT)	Weekly auctions for balancing capacity for FCR (all)
Planned daily auctions for aFRR (AT, DE)	Very low frequency of capacity bidding for aFRR (NL)
Remuneration	
Level playing field for all providers in terms of remuneration (NL)	Pay-as-bid pricing rule for aFRR and mFRR balancing energy (AT, DE)
	Reduced fees or exemptions for some balancing providers (AT) and support schemes for a specific technology type (premiums) (DE)

precontracted bids allow them to generate profits through balancing energy activation. Such bids are also called for in the EBGL (Table 1). Yet, the need for them may fall away in the future if the frequency of bidding increases and competition levels are no longer a concern.

5.2.2. Time-related requirements, service remuneration and market efficiency

Adjustment of timing characteristics (Fig. 1) can significantly increase utilization efficiency in the balancing market by allowing cheaper distributed BSPs to participate. The auction frequencies in the three markets for most products are not yet aligned with the aspiration to increase the bidding frequency for all products to daily, as stipulated in the EBGL (Table 1). Longer contracting periods can be beneficial for awarded BSPs, allowing them to enjoy a long period of guaranteed profits from reserved capacity. However, this also creates more uncertainty since these profits are lost if the bid was not selected and the waiting time for the next bidding opportunity is considerable. Moreover, smaller providers or vRES are likely to face difficulties to ensure that their pool is constantly available for a longer period of time, making it more difficult for them to participate. For instance, the bidding frequency for FCR and especially for aFRR in the Netherlands remains remarkably low, making it impossible even for aggregated DER to provide balancing capacity. DER-aggregating BSPs can therefore only participate through non-precontracted energy bids. The planned introduction of daily auctions for aFRR in Austria and Germany in 2018 is likely to boost the entry of new participants, liquidity, competition and price efficiency as a result.

The product resolution, as defined by the period of time during which a product may be activated, directly affects the participation of DER. In the Austrian and German balancing markets, the shortest product block is 4 h for mFRR. According to its recent decision, the German regulator intends to reduce current 12-h blocks for aFRR to 4 h (Bundesnetzagentur, 2017). A higher temporal granularity substantially improves the opportunity for DER to bid their capacity and subsequently increase market liquidity. A BSP then has to guarantee the availability of bid capacity for a few hours instead of a whole day or for even longer contracting periods, which reduces forecasting risks. A further reduction to 1-h or smaller blocks would accommodate the technical capabilities of small-scale DER even better but is not yet feasible from the point of view of information processing and effort involved in clearing 96 auctions per day (total for aFRR and mFRR) (Bundesnetzagentur, 2017). The fact that product resolution is not directly covered in the EU regulatory documents and therefore not harmonized may potentially affect cross-border procurement and lead to information asymmetries and trade distortions.

Concerning remuneration, the best pricing methodology has been subject of debate (e.g. Haghighat et al., 2008; Heim and Götz, 2013; Müsgens et al., 2014; Ocker et al., 2016). The application of marginal pricing is required by the EBGL (Table 1). It has been argued that pay-as-bid pricing hinders effective price formation (ACER/CEER, 2017) and affects small-scale providers particularly negatively as compared to marginal pricing (Weidlich, 2009). Under pay-as-bid pricing, large BSPs in a concentrated balancing market are likely to bid close to the expected marginal price rather than their true costs (Ocker et al., 2018). In contrast, smaller BSPs, being price-takers, may be compelled to bid closer to their marginal costs and only manage to cover those under the pay-as-bid rule. Since bidding is voluntary, prequalified small-scale BSPs might not be encouraged to bid regularly into the balancing market but only in situations when expected balancing prices and therefore profit margins are high. Such sporadic bidding, however, reduces utilization efficiency and competition levels in the market. Marginal pricing may reduce information asymmetries between more and less experienced BSPs and stimulate DER investments over a longer term. Yet, it may also produce the opposite effect if market concentration is high, which is why the Austrian and German regulators have not introduced marginal pricing thus far. Other measures, such as increasing the bidding frequency, should take precedence in order to improve competition levels first.

5.3. Lessons learned

The main lessons learned from this comparative study are summarized in Table 4. Current rules do not sufficiently facilitate the use of DER for balancing. In the countries of study, most positive developments are related to the formal and administrative criteria for market entry and prequalification of DER. More obstacles remain in the area of actual market participation due to the auction configuration and the role of applicable support schemes. The case studies can give stakeholders in other markets in the EU insights as to which concrete elements of market design can either improve or complicate the position of DER in balancing markets.

The analysis in Section 5 notably points to links between different

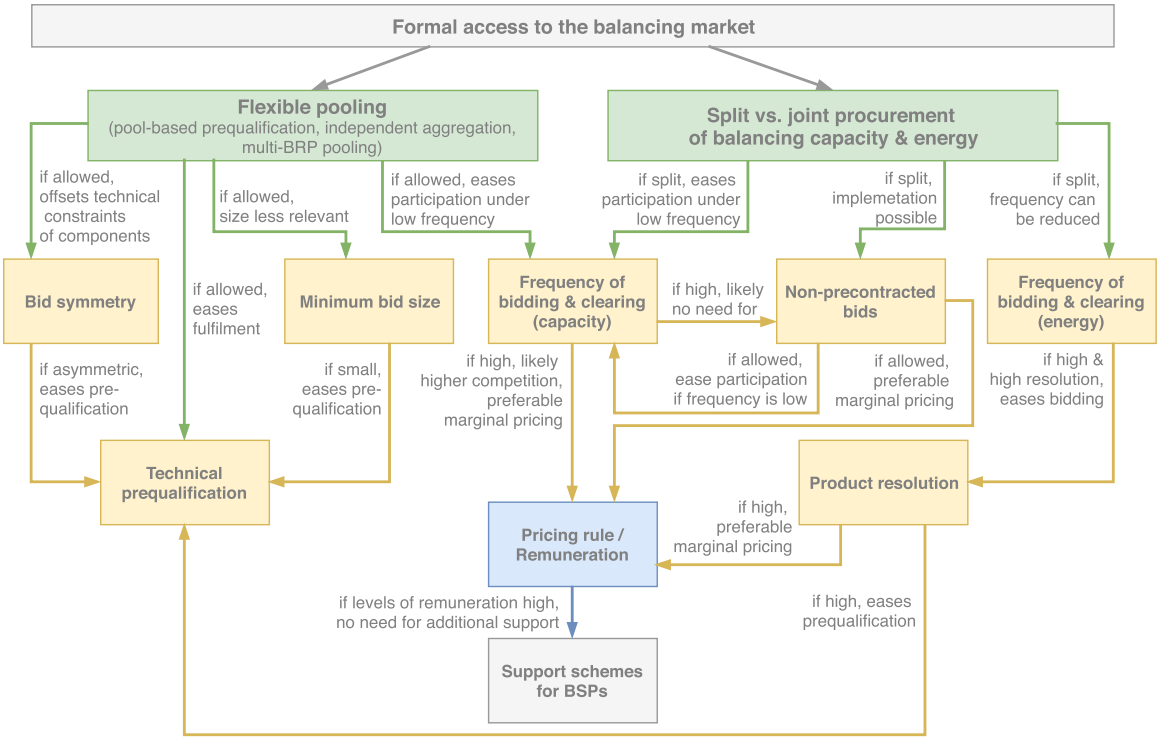

Fig. 2. Links between balancing market design variables organized according to priority with which they should be addressed.

market design variables. We argue that, in order to achieve a tangible improvement of the balancing market design, adjustments need to be implemented stepwise observing these links, as illustrated in Fig. 2. It shows the all the design variables[7] included in our assessment framework (as presented in Table 1) ranked according to the level of priority. In order to ensure optimal integration of DER into the balancing market, as the first step, formal access requirements should not preclude DER participation. Once these no longer represent a barrier for DER, two critical design variables, flexible pooling conditions and separate capacity and energy markets, need to be addressed in the second step as the largest number of other variables is dependent on them. For instance, extended pooling options help to fulfil technical prequalification requirements, to reach the required minimum bid size as well as comply with longer contracting periods and bid symmetry requirements. Splitting balancing capacity and balancing energy markets is necessary before introducing non-precontracted bids and reducing the frequency of energy bidding. In the next market design step, increasing product resolution, frequency of bidding and authorizing non-precontracted bids can all help to achieve higher competition levels and, subsequently, justifying the introduction of marginal pricing. Once this is accomplished, it should be critically assessed if support schemes for balancing service provision are still necessary.

6. Conclusions and policy implications

The extent to which DER can contribute to the efficient functioning of the balancing market, among others, greatly depends on the market access criteria and auction configuration, which includes design variables related to the bids, timing and remuneration. The formal acceptance of new balancing resources does not guarantee their *de facto* entry as the actual rules can still be too restrictive or incentives insufficient. We developed an assessment framework which presents the most complete overview of balancing market design choices for DER thus far. Its application was illustrated with the help of a comparative analysis of the Austrian, German and Dutch balancing markets. It allowed us to systemically analyze the impact of current design choices on the performance of the balancing market with respect to non-discrimination and economic efficiency. The framework can aid decision-makers in harmonizing the currently fragmented balancing market designs and improving them to facilitate the contribution of DER to system balancing.

Key differences between balancing markets among the countries of study include the administrative requirements placed on DER and their aggregators as well as aspects of auction configuration. The minimum bid sizes that TSOs allow range from 1 to 5 MW, which is fairly restrictive for DER. Large differences were observed in product resolution, which is substantially higher in the German and Austrian markets than in the Netherlands. Similarly, the countries apply different bidding frequencies ranging from one year to one day for the procurement of balancing capacity. The Dutch market is the only one in which balancing energy is procured separately from balancing capacity and in which non-precontracted bids are allowed. Finally, the three countries apply different pricing rules to the remuneration of activated balancing energy, namely pay-as-bid in the German and Austrian markets and uniform pricing in the Dutch market.

We conclude that for an efficient utilization of DER more changes to the auction configuration are needed while the support schemes for the resources contributing to system balancing need to be streamlined. Providing extensive pooling options (Table 4) such as independent aggregation and pool-based prequalification can significantly improve the potential contribution of DER. In this regard, care should be taken when determining the conditions for the participation of aggregators and the agreements they need to conclude with other market participants. In those markets where the bidding frequency remains low, non-precontracted bids, as in the Dutch market, may significantly facilitate access to DER. Since DER may face much higher forecasting challenges compared to conventional BSPs, the market design can be improved by increasing the frequency of bidding together with applying a higher

[7] For the sake of a better overview variables under “formal access requirements” and “technical prequalification criteria” were represented as clusters in the diagram (Fig. 2).

product resolution, following the examples of Germany and Austria.

Recent EU regulatory documents (European Commission, 2017) cover almost all crucial design variables related to DER participation in the balancing market. Yet, product resolution was not addressed and, while aggregation was encouraged, specific roles and responsibilities or pooling options remain to be defined.

An important implication of this analysis is that adjustments to the balancing market design need to be considered in aggregate since different design variables can enhance or neutralize each other's effects. We identified multiple relations between different balancing market design variables and showed that formal access criteria have to be addressed in the first place, followed by the pooling requirements and the introduction of split markets for the procurement of balancing capacity and energy. Only once several adaptations related to the auction configuration have been implemented, can the pricing rule be changed to marginal to ensure optimal market performance. Finally, the need for special support schemes for BSPs is questionable and should be critically assessed once the market design has been improved.

As a potential enhancement of our framework, it can be tailored to different DER types or augmented by a quantitative analysis of variable combinations and the identified differences in the balancing market design on market performance. A second line of research regarding the market integration of DER should concern the role of network tariffs along with exploration of ways to streamline TSO-DSO interaction to lower the barriers for DER deployment.

Acknowledgements

The authors would like to thank Werner Friedl, Stefan Vögel, Samuel Glismann, Frank Nobel, Jeroen Peters and Martin Povh for the valuable inputs and discussions that contributed to this paper.

Appendix A. List of abbreviations

aFRR – automatic frequency restoration reserve
AT – Austria
BRP – balance responsible party
BSP – balancing service provider
DE – Germany
DER – distributed energy resources
DSO – distribution system operator
EBGL – EU Regulation establishing a guideline on electricity balancing
FCR – frequency containment reserve
mFRR – manual frequency restoration reserve
NL – the Netherlands
TSO – transmission system operator
vRES – variable renewable energy sources

References

50 Herz, Amprion, Tenne T., Transnet B.W., 2017. Leitfaden zur Präqualifikation von Windenergieanlagen zur Erbringung von Minutenreserveleistung im Rahmen einer Pilotphase.
Abbasy, A., 2012. National Design and Multinational Integration of Balancing Services Markets (Ph.D. thesis). Delft University of Technology, Next Generation Infrastructures Foundation.
ACER/CEER, 2017. Annual Report on the Results of Monitoring the Internal Electricity and Gas Markets in 2016. Agency for the Cooperation of Energy Regulators and the Council of European Energy Regulators, Brussels.
Borne, O., Korte, K., Perez, Y., Petit, M., Purkus, A., 2018. Barriers to entry in frequency-regulation services markets: review of the status quo and options for improvements. Renew. Sustain. Energy Rev. 81, 605–614. https://doi.org/10.1016/j.rser.2017.08.052.
Böttger, D., Götz, M., Theofilidi, M., Bruckner, T., 2015. Control power provision with power-to-heat plants in systems with high shares of renewable energy sources? An illustrative analysis for Germany based on the use of electric boilers in district heating grids. Energy 82, 157–167. https://doi.org/10.1016/j.energy.2015.01.022.
Braam, F., Diazgranados, L.M., Hollinger, R., Engel, B., Bopp, G., Erge, T., 2016. Distributed solar battery systems providing primary control reserve. IET Renew. Power Gen. 10, 63–70. https://doi.org/10.1049/iet-rpg.2015.0147.
Bundesministerium der Justiz und für Verbraucherschutz, 2017. Gesetz für den Ausbau erneuerbarer Energien (Erneuerbare-Energien-Gesetz - EEG 2017).
Bundesnetzagentur, 2017. Beschluss in dem Verwaltungsverfahren zur Festlegung von Ausschreibungsbedingungen und Veröffentlichungspflichten für Sekundärregelung.
CE Delft, 2016. Refining Short-Term Electricity Markets to Enhance Flexibility (Study No. 099/02-S-2016/EN). Agora Energiewende.
Chaves-Ávila, J.P., 2014. European Short-Term Electricity Market Designs under High Penetration of Wind Power (Ph.D. Thesis). TU Delft, Delft.
Dragoon, K., Papaefthymiou, G., 2015. Power System Flexibility Strategic Roadmap. Preparing power systems to supply reliable power from variable energy resources. ECOFYS, Berlin (No. POWDE15750).
E-Control, 2017. Electricity System Charges Ordinance 2017 (In Ger. Verordnung der Regulierungskommission der E-Control, mit der die Entgelte für die Systemnutzung bestimmt werden(Systemnutzungsentgelte-Verordnung 2012, in der Fassung der Novelle 2017).
EG3 Smart Grids Task Force, 2015. Regulatory Recommendations for the Deployment of Flexibility. European Commission, Brussels (EG3 Report. Smart Grid Task Force).
ENTSO-E, 2017. Survey on Ancillary Services Procurement, Balancing Market Design 2016. ENTSO-E, Brussels.
European Commission, 2017. Commission Regulation (EU) 2017/2195 of 23 November 2017 establishing a guideline on electricity balancing.
European Commission, 2016. Proposal for a Directive of the European Parliament and of the Council on common rules for the internal market in electricity (No. COM (2016) 864 final). Brussels.
European Commission, 2009. Directive 2009/72/EC of the European Parliament and of the Council of 13 July 2009 concerning common rules for the internal market in electricity and repealing Directive 2003/54/EC. OJ L 211, 14.8.2009, p. 55–93.
Haghighat, H., Seifi, H., Rahimi Kian, A., 2008. The role of market pricing mechanism under imperfect competition. Decis. Support Syst. 45, 267–277. https://doi.org/10.1016/j.dss.2007.12.011.
Heim, S., Götz, G., 2013. Do Pay-as-bid Auctions Favor Collusion? Evidence from Germany's Market for Reserve Power. Zentrum für Europäische Wirtschaftsforschung, Berlin (Discussion Paper No. 13-035).
Hirth, L., Ziegenhagen, I., 2015. Balancing power and variable renewables: three links. Renew. Sustain. Energy Rev. 50, 1035–1051. https://doi.org/10.1016/j.rser.2015.04.180.
Koliou, E., Muhaimin, T.A., Hakvoort, R.A., Kremers, R., 2015. Complexity of demand response integration in European electricity markets. IEEE 1–5. https://doi.org/10.1109/EEM.2015.7216759.
Kollau, M., Vögel, S., 2014. Demand Response im Österreichischen Regelenergiemarkt im Kontext der Energieeffizienzrichtlinie 2012/27/EU - Analyse anhand internationaler Erfahrungen. TU Graz, Graz.
Müsgens, F., Ockenfels, A., Peek, M., 2014. Economics and design of balancing power markets in Germany. Int. J. Electr. Power Energy Syst. 55, 392–401. https://doi.org/10.1016/j.ijepes.2013.09.020.
Ocker, F., Braun, S., Will, C., 2016. Design of European balancing power markets, In: European Energy Market (EEM), 2016 Proceedings of the 13th International Conference on the. IEEE, pp. 1–6.
Ocker, F., Ehrhart, K.-M., Belica, M., 2018. Harmonization of the European balancing power auction: a game-theoretical and empirical investigation. Energy Econ. https://doi.org/10.1016/j.eneco.2018.05.003.
Ocker, F., Ehrhart, K.-.M., Ott, M., 2017. Bidding Strategies in the Austrian and German Secondary Balancing Power Markets. Presented at the 10. Internationale Energiewirtschaftstagung an der TU Wien IEWT 2017, TU Wien, Vienna.
Pérez-Arriaga, I.J., 2013. Regulation of the Power Sector. Springer, New York.
Poplavskaya, K., 2018. Dreieck Lieferant - Aggregator - Bilanzgruppenverantwortliche im österreichischen Strommarkt. Presented at the 15. Symposium Energieinnovation, Verlag der Technischen Universität Graz, Graz, Austria. ⟨https://doi.org/10.3217/978-3-85125-586-7⟩.
Poplavskaya, K., De Vries, L.J., 2018. A (not so) Independent Aggregator in the Electricity Market: Theory, Policy and Reality Check. Presented at Proceedings of the 15th International Conference on the European Energy Market, Lodz, Poland. ⟨https://doi.org/10.1109/EEM.2018.8469981⟩.
SWECO, 2015. Study on the effective integration of Distributed Energy Resources for providing flexibility to the electricity system. (Final Report to the European Commission No. 54697590000). SWECO, ECOFYS, Tractebel Engineering, pwc, Stockholm.
TenneT, 2017. Market Review 2016.
TenneT, 2016. Product Information aFRR (Regulating power) (No. SON-SY 16-010).
Van der Veen, R., 2012. Designing Multinational Electricity Balancing Markets (Doctoral Thesis). Technische Universiteit Delft.
Van der Veen, R.A.C., Hakvoort, R.A., 2016. The electricity balancing market: exploring the design challenge. Util. Policy 43, 186–194. https://doi.org/10.1016/j.jup.2016.10.008.
Vandezande, L., Meeus, L., Belmans, R., Saguan, M., Glachant, J.-M., 2010. Well-functioning balancing markets: a prerequisite for wind power integration. Energy Policy 38, 3146–3154. https://doi.org/10.1016/j.enpol.2009.07.034.
Weidlich, A., 2009. Engineering Interrelated Electricity Markets: An Agent-based Computational Approach, Contributions to Management Science. Physica-Verl, Heidelberg.