"We would like to have parking(...) I don't want to get muddy in winter. Going from here to school in winter... Forget it. In the winter this is pure mud. From here down to the las Palmas Court, it becomes a river." Source: A. Pino

"If you come back in five years you'll find a different landscape. Any picture you see today will be different in five years." Source: P.Faus

"The house was built gradually, at the beginning we had no toilet. We had to go upstairs to my mother-in-law's. So one day they started searching the existing drains and they built a room that became the toilet." Source: P.Faus

"Visitors who come to Valparaiso for the first time usually wonder How do people reach their houses? Where is the door? But somehow all of them have their own path and entries. For Example, my neighbour has to go through his son's house, The man living downstairs has to go through his niece's house to get home." Source: P.Faus

"Dear neighbors of Cerro Merced, we inform you that the tray that was located in the El Pajonal farm was removed due to the misuse of it by the neighbors." Source: Aseo Muni Valparaiso

"We play here with everyone, we like to play here, it would be good to have it fixed. Because the court neither has goal posts, nor lights. If it had, we could play in the night and we would organize tournaments." Source: A. Pino

"Last October(2009), neighbors organized a football tournament. The neighborhood committee was faced with the collected money. The tournament was held in Las Palmeras. There were 200 people. It lasted three weeks, the neighbors sold many things." Source: A.Pino

"Here I started painting because this was a vacant site, first I had a lot of flowers. Then we raised rabbits, 50 rabbits'; and my husband started selling them.(...) Now I grow my vegetables for daily consumption, so I save on that, green beans, tomatoes, chard, some chips and beer, and also herbs, oregano, mint, plenum." Source: A. Pino

"While the family grew, the house grew as well for example, they removed the roof and raised another floor, It's like adding houses over houses." Source: P.Faus

"If I leave now, all the work is for nothing. All my effort to go up and down the hill, the sacrifice, to fall in the ground when i was pregnant i felt three times." Source: M.O.Valenchon

"Remodeling and restoring, but here I can not bring big things, because of the little space, then I have to do small things, I can not do big jobs and I can not hire people here because of the conditions I am in. And if I had a bigger workshop I could give jobs, I could give work to a carpenter, a furniture maker, an upholsterer, a lot of people who are just starting to train, and work would not be lost." Source: A.Pino

"You find up loving the house you built, because of the sacrifice it implied. Even if I got a free new apartment, I wouldn't move... No way! This was built with my effort" Source: P.Faus

"Most people here in the hills build according to their needs. In our case I added a bedroom, I enlarged the kitchen and I built a bathroom. Each one adapting their house to their needs. According to their pockets of course." Source: P.Faus

Water flow is being infrastructured

Fire Memorial

School

Future Park Project

Thirteenth Ave

Basins of the 2014 Fire

Limited viability

Panoramic

Fences

Rural activities

Houses are not connected to a sewage infrastructure

Ocean View

Toilets

The water stream is canalized after the fire

Medians embellished after the fire

The south looking house, despite its sunlight

Downtown Wind

Motel volumes form a wall

Ex-motel, burnt down, not in use

Temporal Scales of Intervention

A - Urban Scale
Actor: Architect

Where to intervene? Why Rinconada?
-Affected by the 2014 fire
-In healing process
-Mutual knowledge in the area
-Low consolidation
-Urban/rural threshold

B - Single Family Scale
Actor: Inhabitants

No intervention

C - Neighbourhood Scale
Actor: Architect, Inhabitants, Architecture Students, Government, NGO's

-Reading, Analysis
-Collective Mapping
-Collective Construction
-Assistance and Training

This stage of the strategy consists of eight interventions:
1. Landscape Revitalization
2. Community Center - The Tribune
3. Community Gardens
4. Pathways (Rural)
5. Ex-Motel Competititon
6. The Bridge - Market and Workshop
7. Pathways (Ruins)
8. Panoramic Spot Competition

The stages are ordered according to the starting dates of the interventions.

D - Appropriation and Management
Actor: Inhabitants, NGO's

-Ongoing process
-NGO asssitance and training
-New volumes, functions and houses

The appropriation which is shown in the image depicts one possible appropriation scenario out of many.

1 - Landscape Revitalization
Actor: Government, NGO's, Inhabitants
Time: 6-12 months

Financing: *Ministry of Environment, Ministry of Agriculture, Regional Government*

Planning: *Ministry of Environment, Ministry of Agricultur, Valpo Interviene, Fundacion mi Parque, Inhabitants*

Realization & Management: *Valpo Interviene, Fundacion mi Parque, Inhabitants*

3 - Community Gardens
Actor: Architect, NGO's, Students, Inhabitants
Time: 1 month

Financing: *Ministry of Agriculture*

Planning: *Architect*

Realization & Management: *FOSIS, Fundacion mi Parque, Inhabitants*

4 - Pathways (Rural)
Actor: Architect, Government, NGO's, Students, Inhabitants
Time: 3-6 months

Financing: *MINVU, Municipality, FOSIS*

Planning: *Architect, Students, Inhabitans*

Realization: *Students, Inhabitants*

Management: FOSIS, Inhabitants

2 - Community Center - The Tribune
Actor: Architect, Government, NGO's, Students, Inhabitants
Time: 3-6 months

Financing: *Municipality, Subdere (Mi Quincho, Mi Cancha)*

Planning: *Architect*

Realization: *Students, Inhabitants*

Management: *Inhabitants*

While the construction of the pathway continues, only the roof of the tribune is constructed to house the tools and materials, as well as the production.

5 - Ex-Motel Competititon
Actor: Government, NGO's, Inhabitants
Time: 12-36 months

Financing: *MINVU, Municipality*

Planning: *Competition by PlanCerro*

Realization: *Municipality, PlanCerro, Inhabitants*

Management: *PlanCerro, Inhabitants*

The competition deals with the public spaces in the area and tries to open up the ex-motel area which was affected by the 2014 fire to the public use.

6 - The Bridge - Market and Workshop
Actor: Architect, Government, NGO's, Students, Inhabitants
Time: 6-12 months

Financing: *Municipality, Subdere*

Planning: *Architect*

Realization: *Government, Students, Inhabitants*

Management: *Inhabitants*

After the construction in the upper part is done, the workshop is moved beneath the bridge. The construction of the pathways in the lower part are managed from this workshop.

7 - Pathways (Ruins)
Actor: Architect, Government, NGO's, Students, Inhabitants
Time: 6-9 months

Financing: *MINVU, Municipality, Sercotec*

Planning: *Architect, Students, Inhabitans*

Realization: *Students, Inhabitants*

Management: *Sercotec, Inhabitants*

The aim is to connect and activate the ruins. Sercotec provides funds for small businesses along the pathway.

8 - Panoramic Competititon
Actor: Government, NGO's, Inhabitants
Time: 12-36 months

Financing: *MINVU, Municipality*

Planning: *Competition by JAB*

Realization: *Municipality, JAB, Inhabitants*

Management: *JAB, Inhabitants*

The competition seeks proposals which deal with the notions of publicity in the informal context and aims to provide a public building which attracts a wider attention from the city.


future appropriations


construction of the pathway

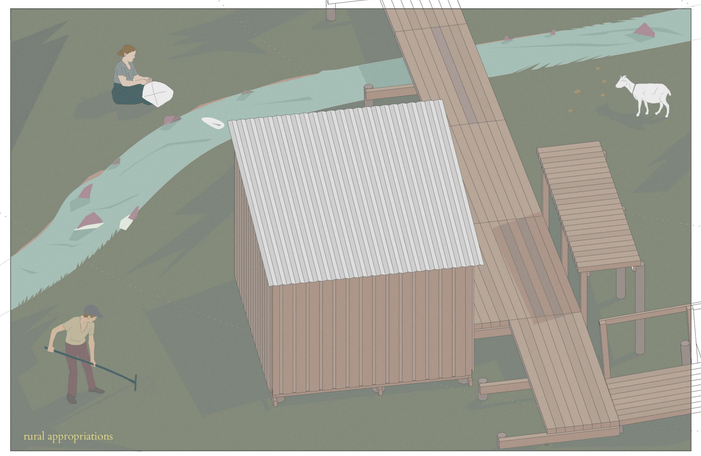
rural appropriations

320 cm
Standard Timber
Dimension
360 cm

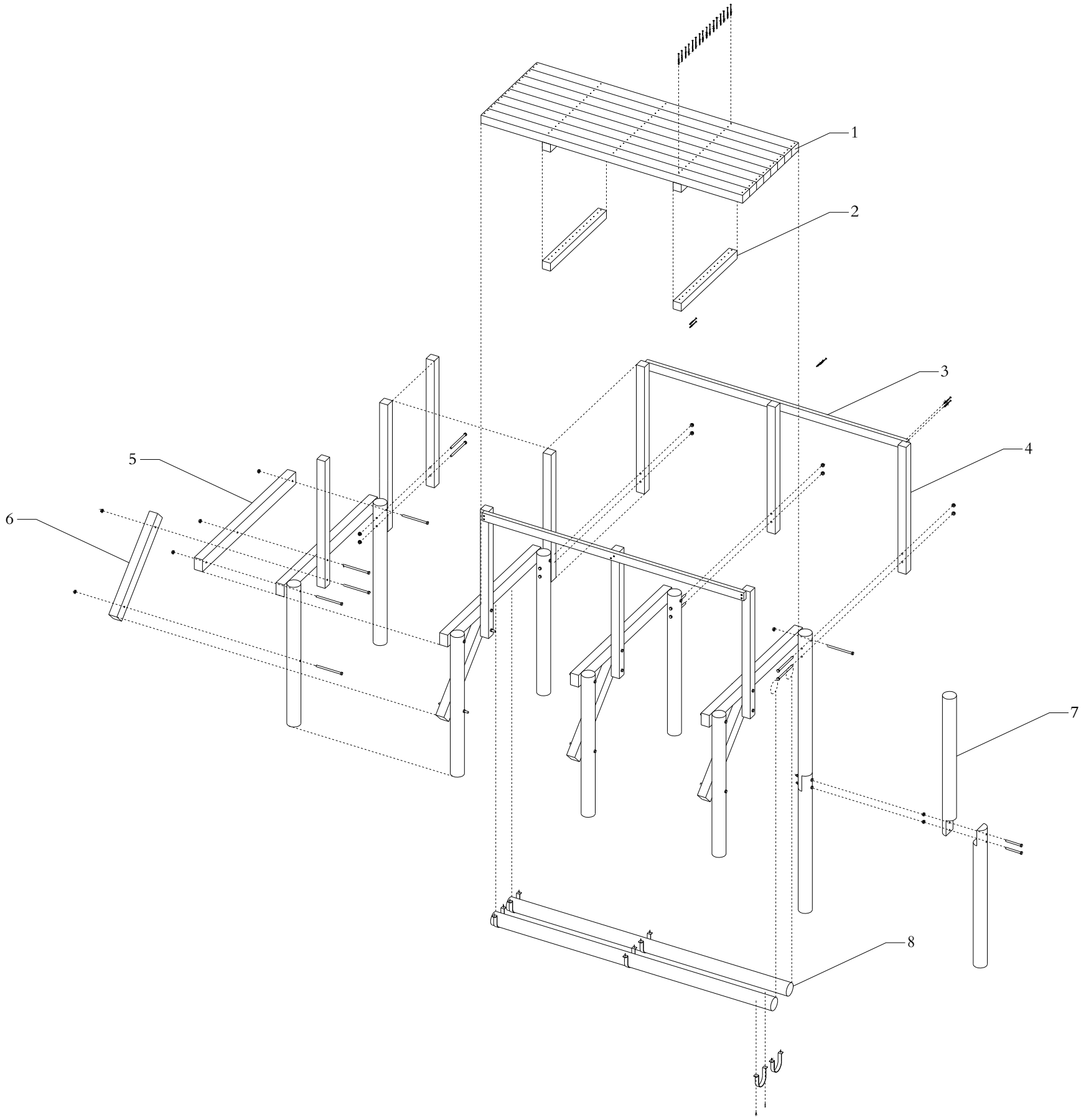

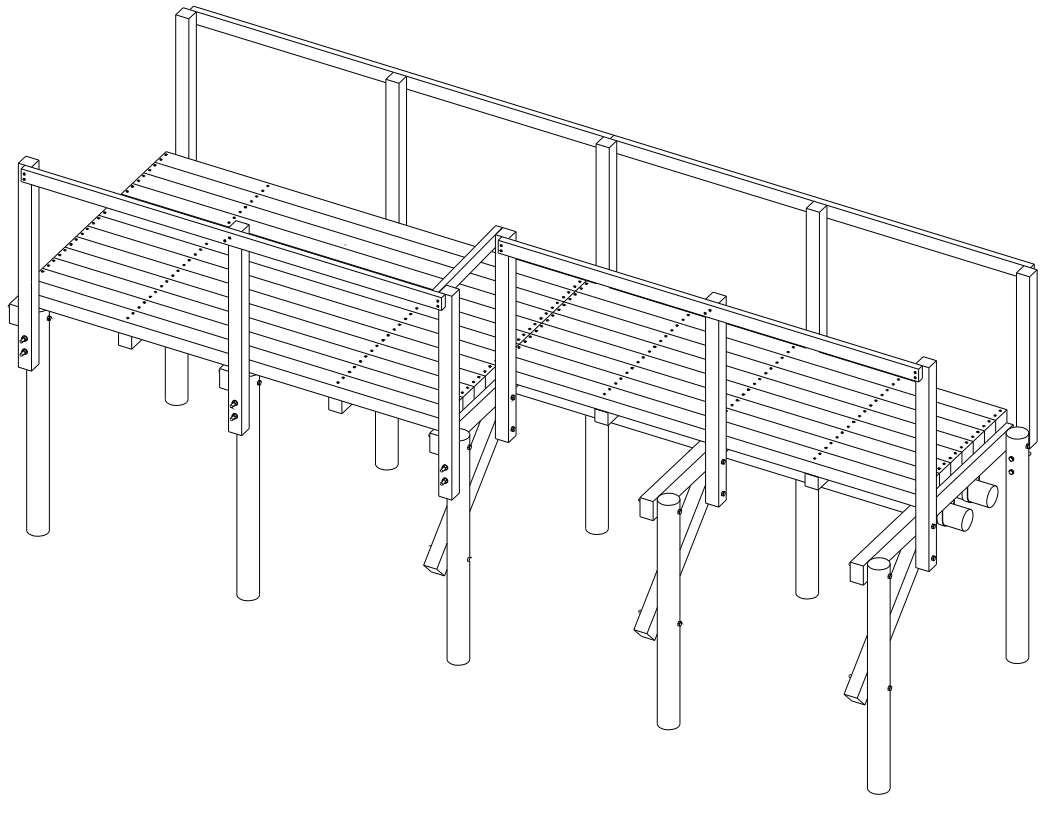

1 Pathway Plank - Sawn Timber - 15x10x320cm **2** Pathway Stabilizer- Sawn Timber - Leftover Pieces **3** Balustrade - Sawn Timber - 10x5x320cm **4** Balustrade Structure - Sawn Timber - 10x10x160cm

5 Pathway Beam- Sawn Timber - 15x10x320cm **6** Bracing Element - Sawn Timber - 15x10x120cm **7** Foundation Pile - Impregnated Post - ⌀15cm **8** Water Pipes - PVC - ⌀20cm

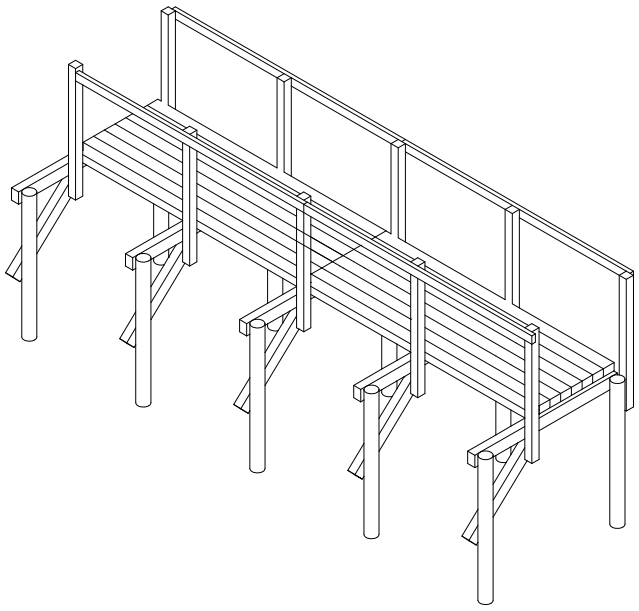

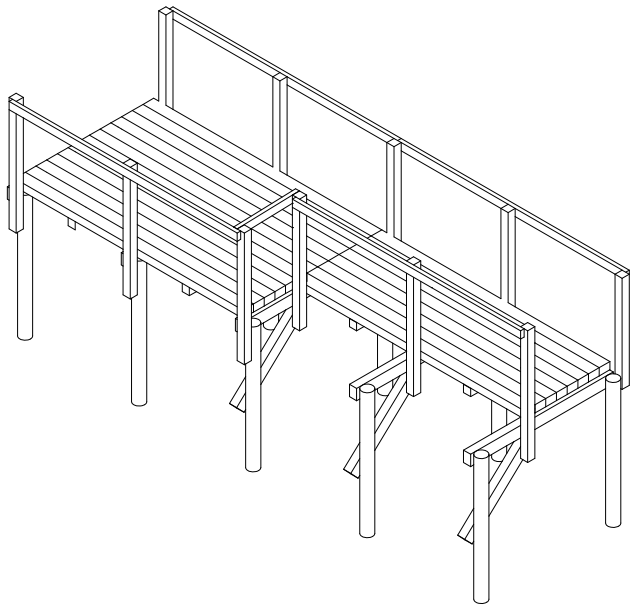

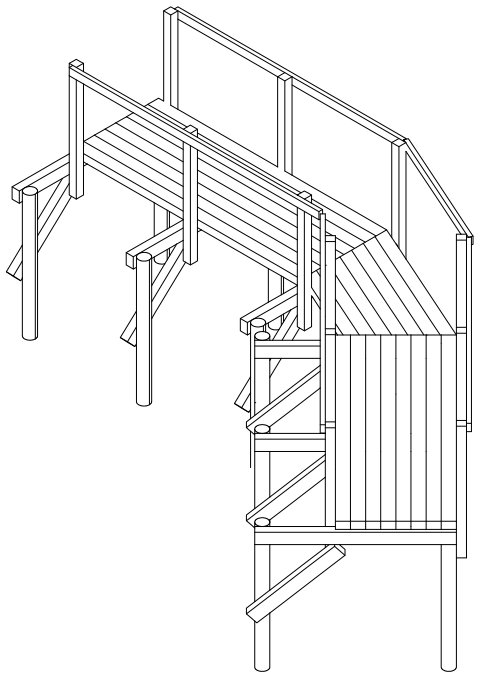

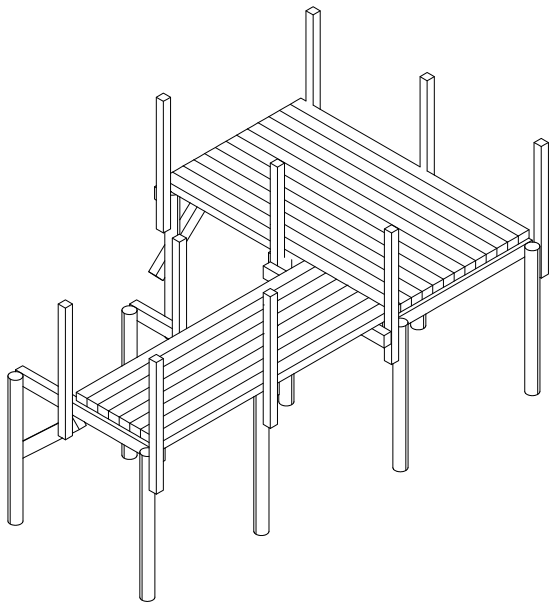

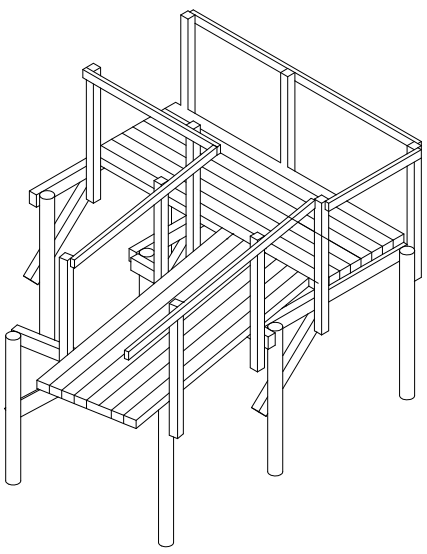

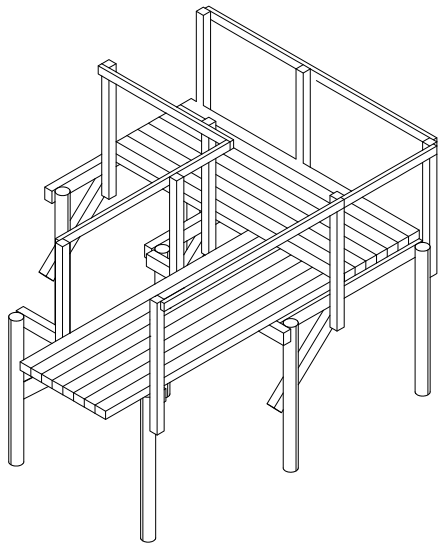

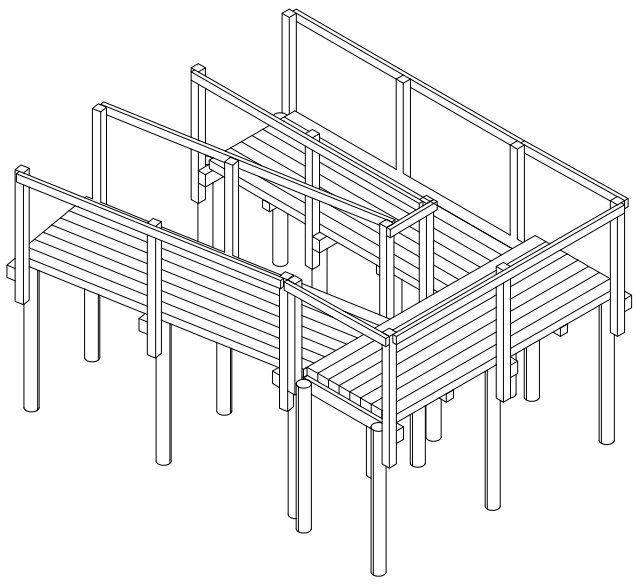

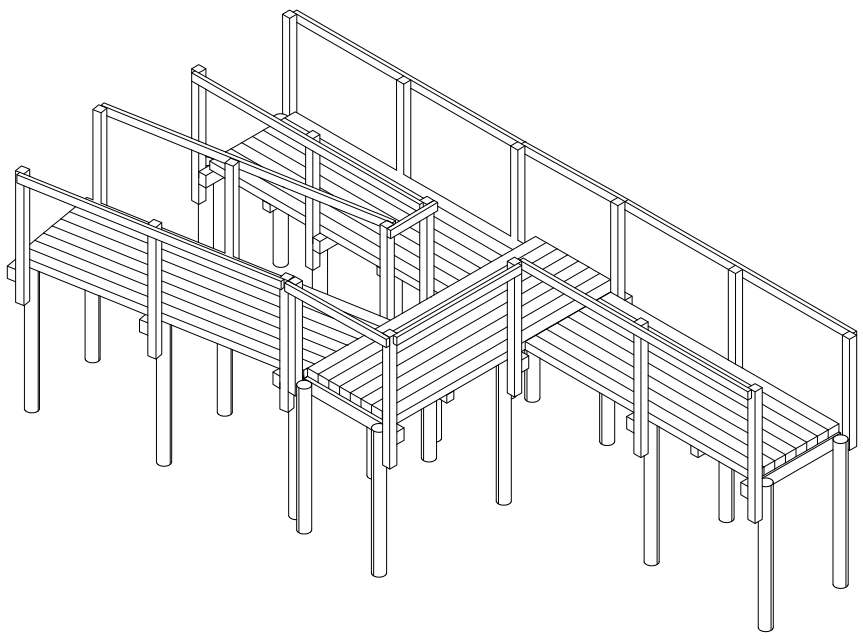

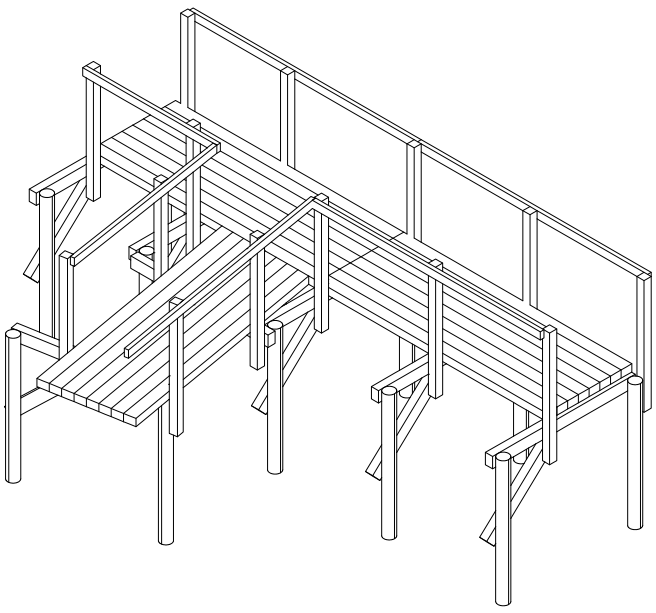

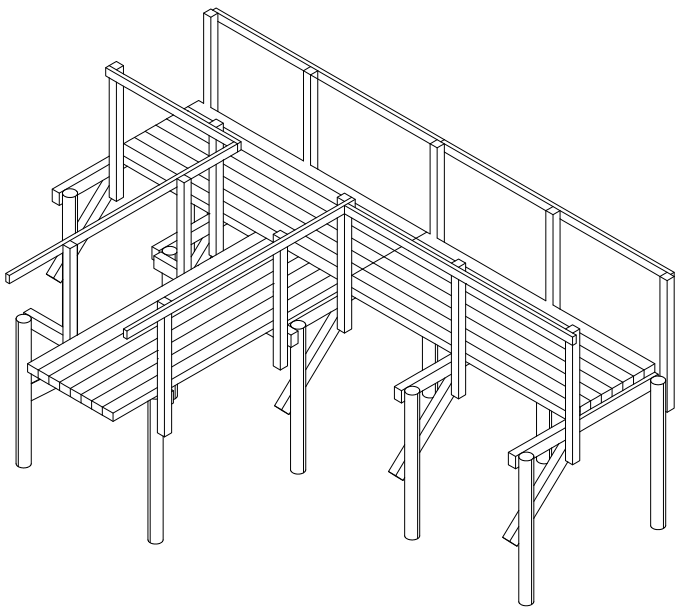

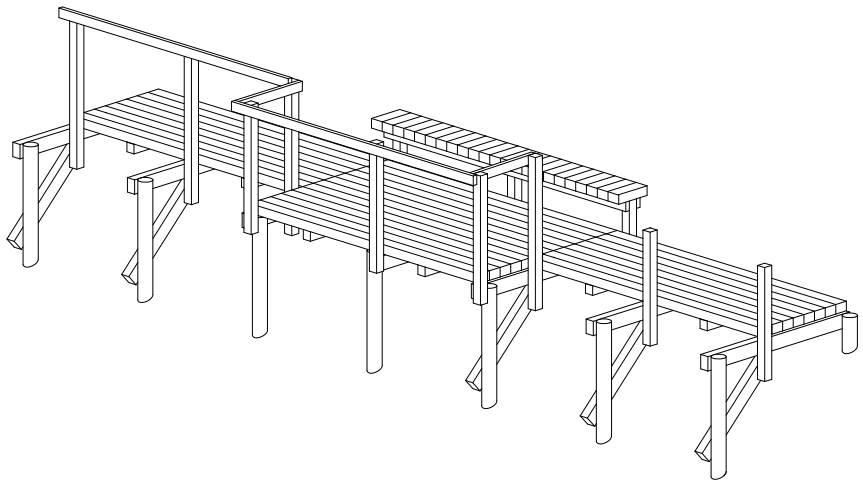

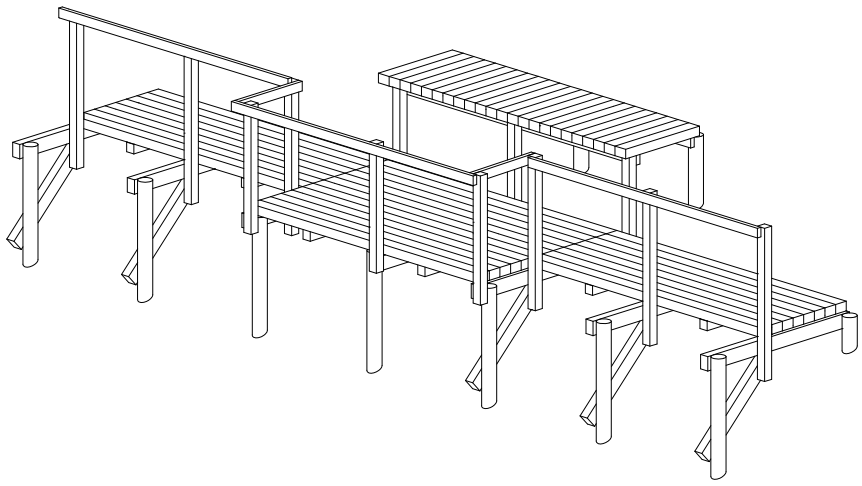

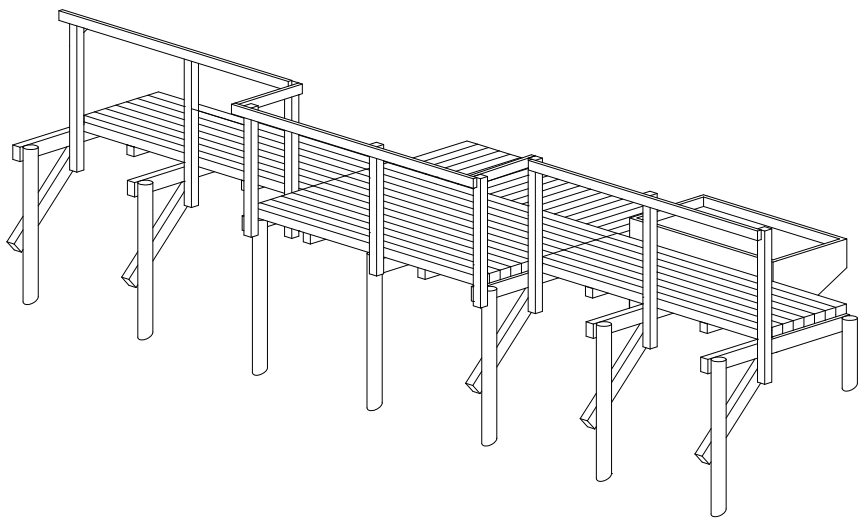

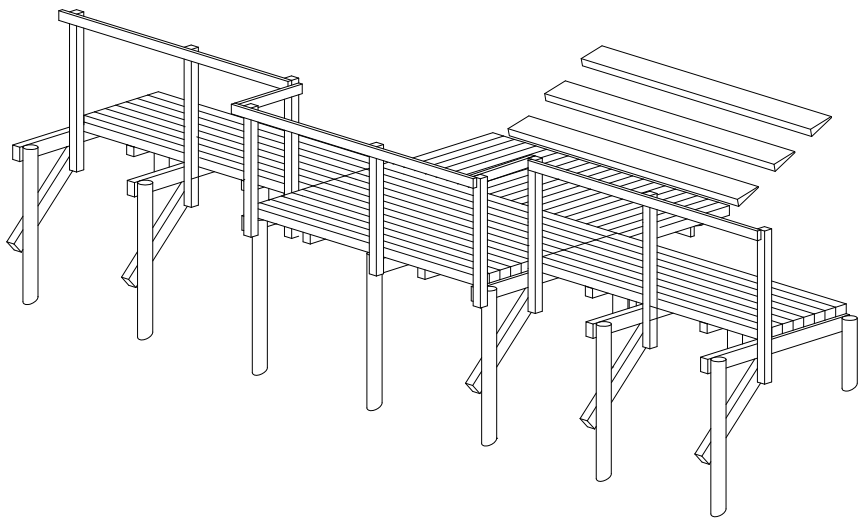

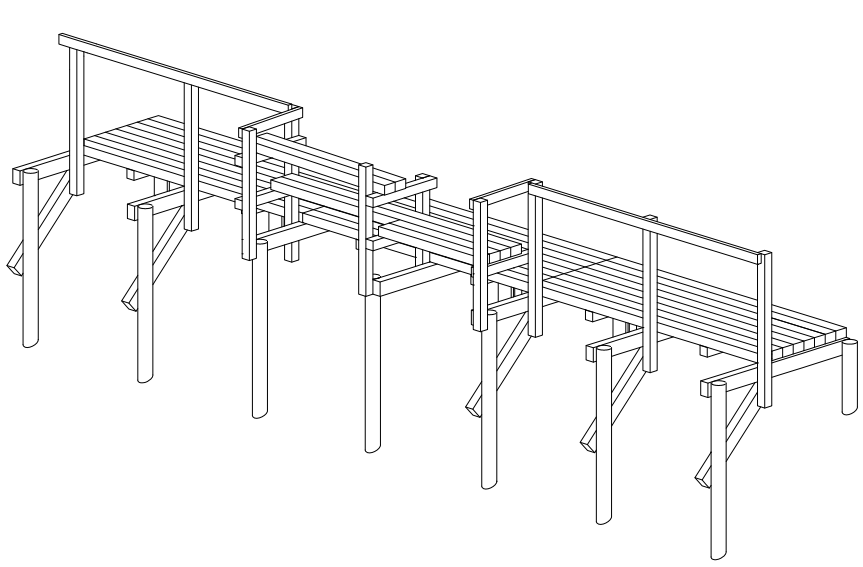

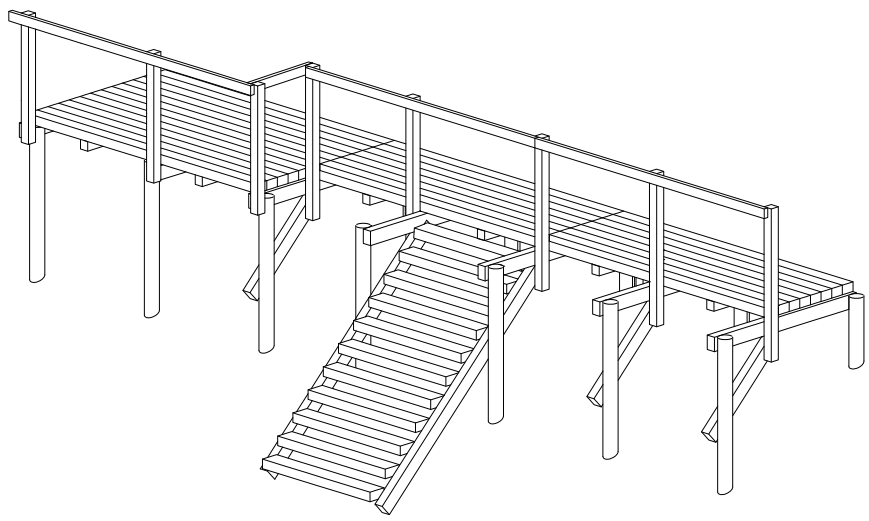

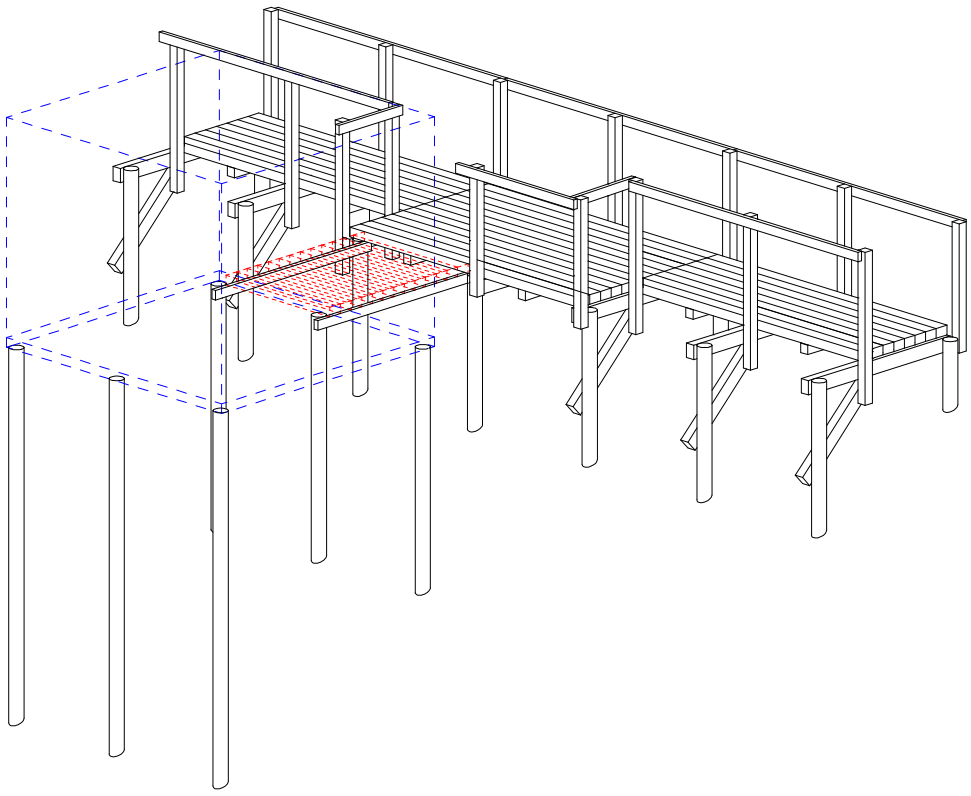

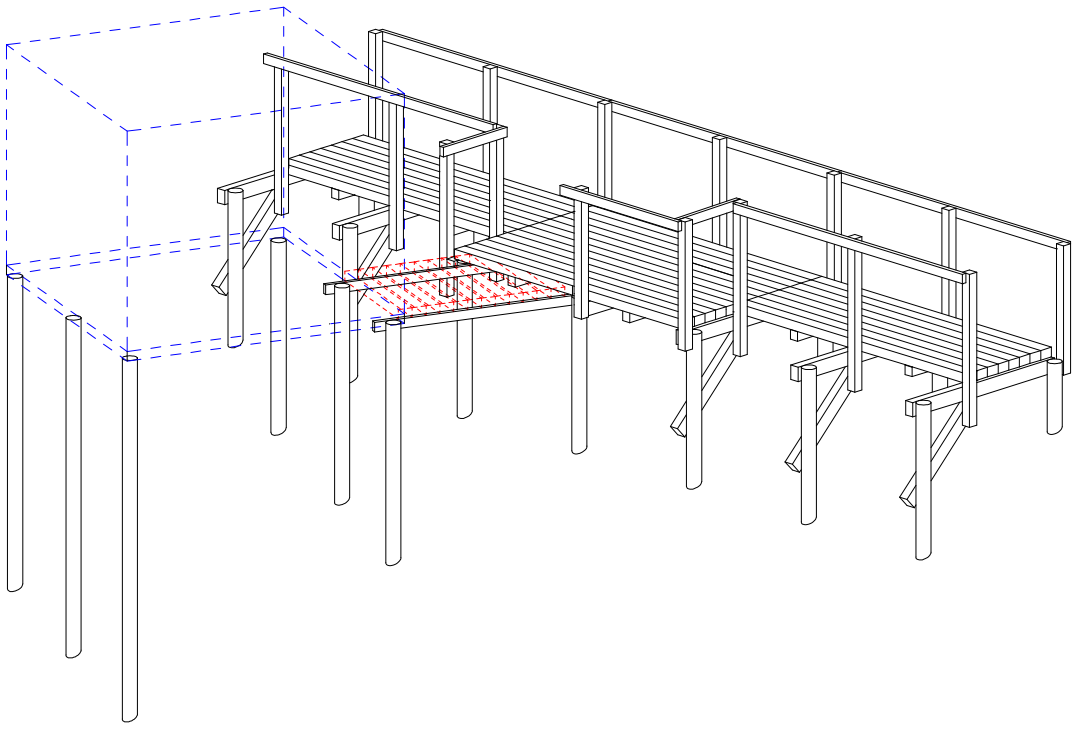

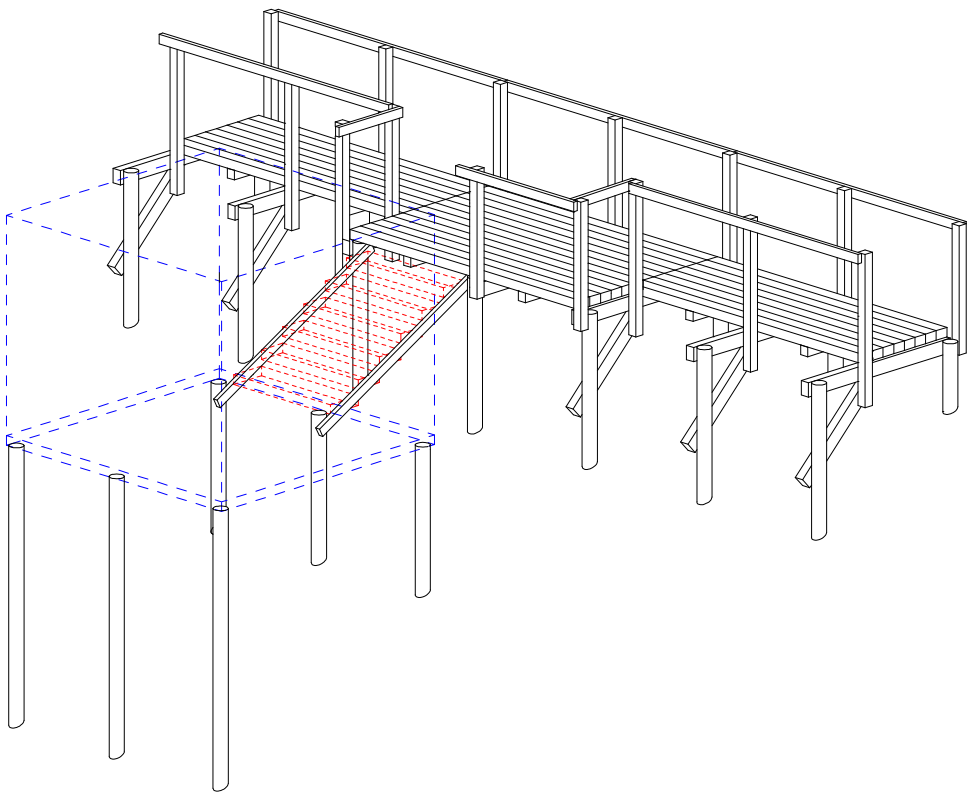

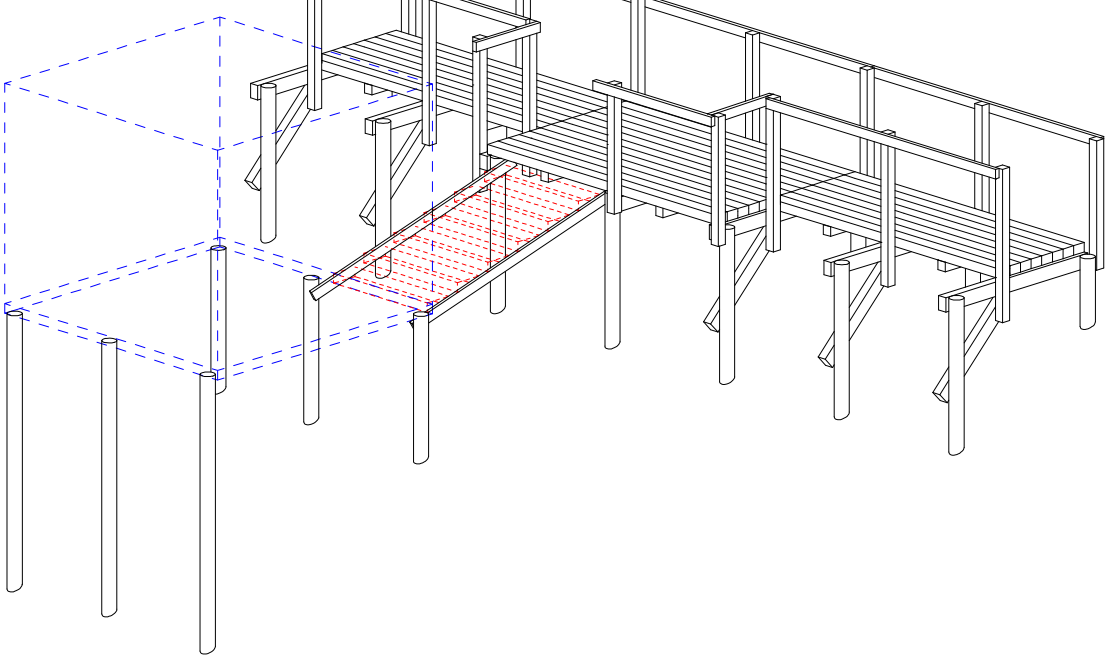

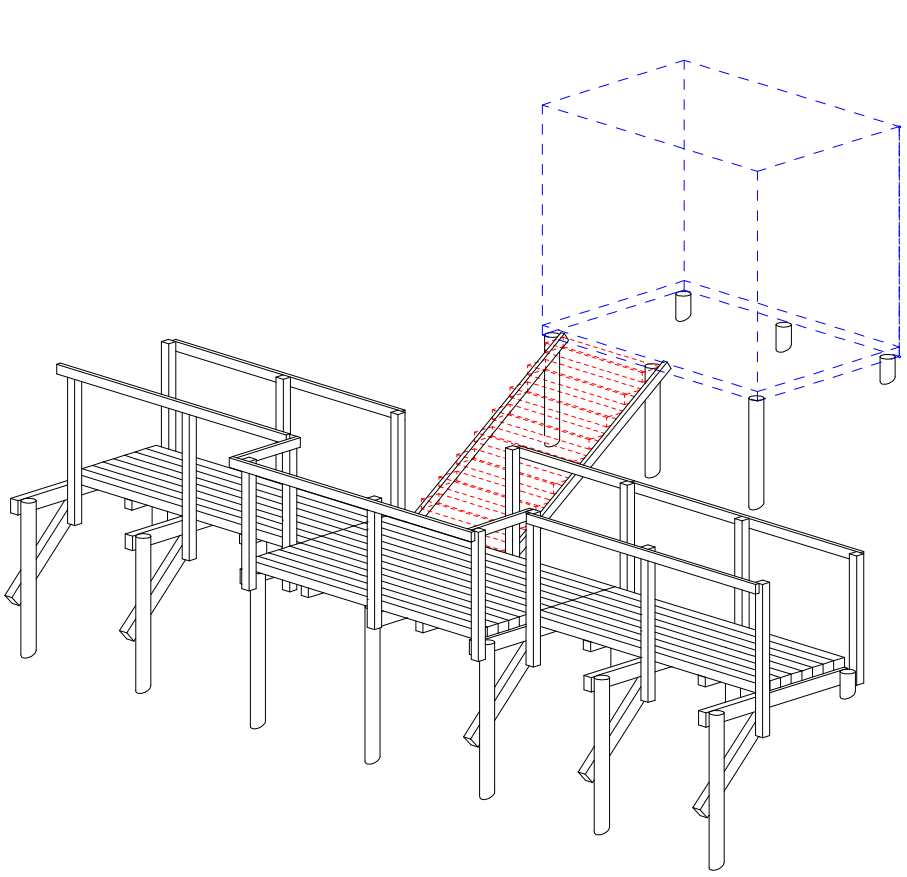

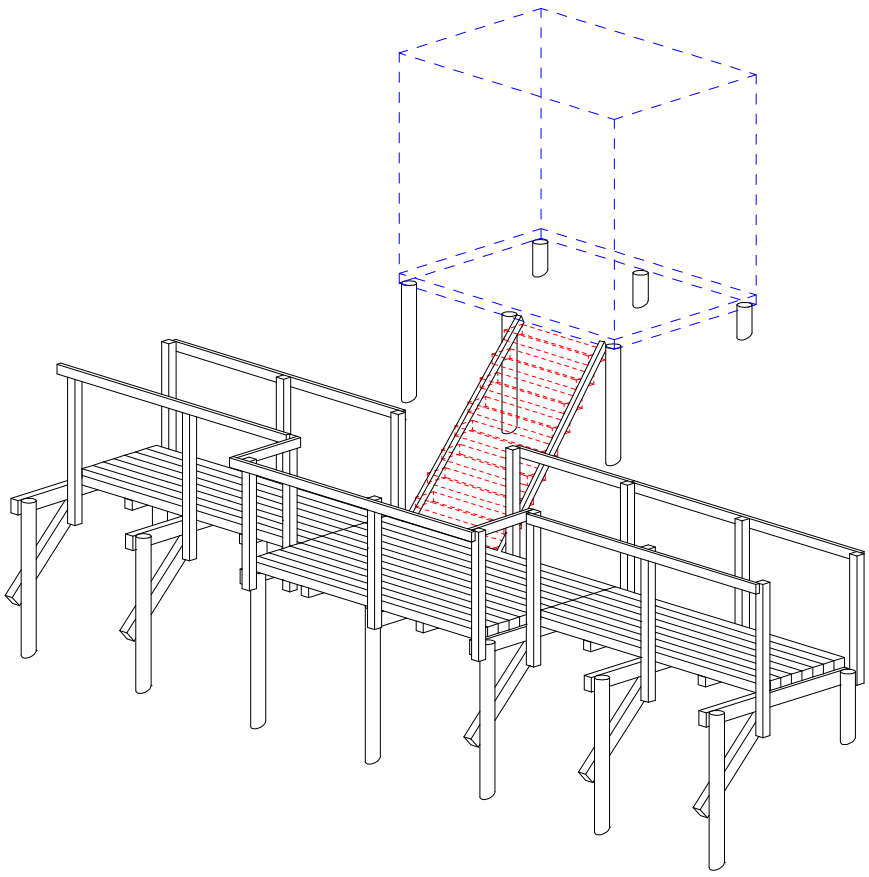

INVENTORY - Pathway Informal Appropriations


Concrete Sump - Mounted in the ground
Septic Tank - Mounted in the ground
Dry Toilet Compostion Containers
Black Water Pipe
Underground Black Water Pipe
Grey Water Pipe
Grey Water and Treated Black Water Filtration Pipe

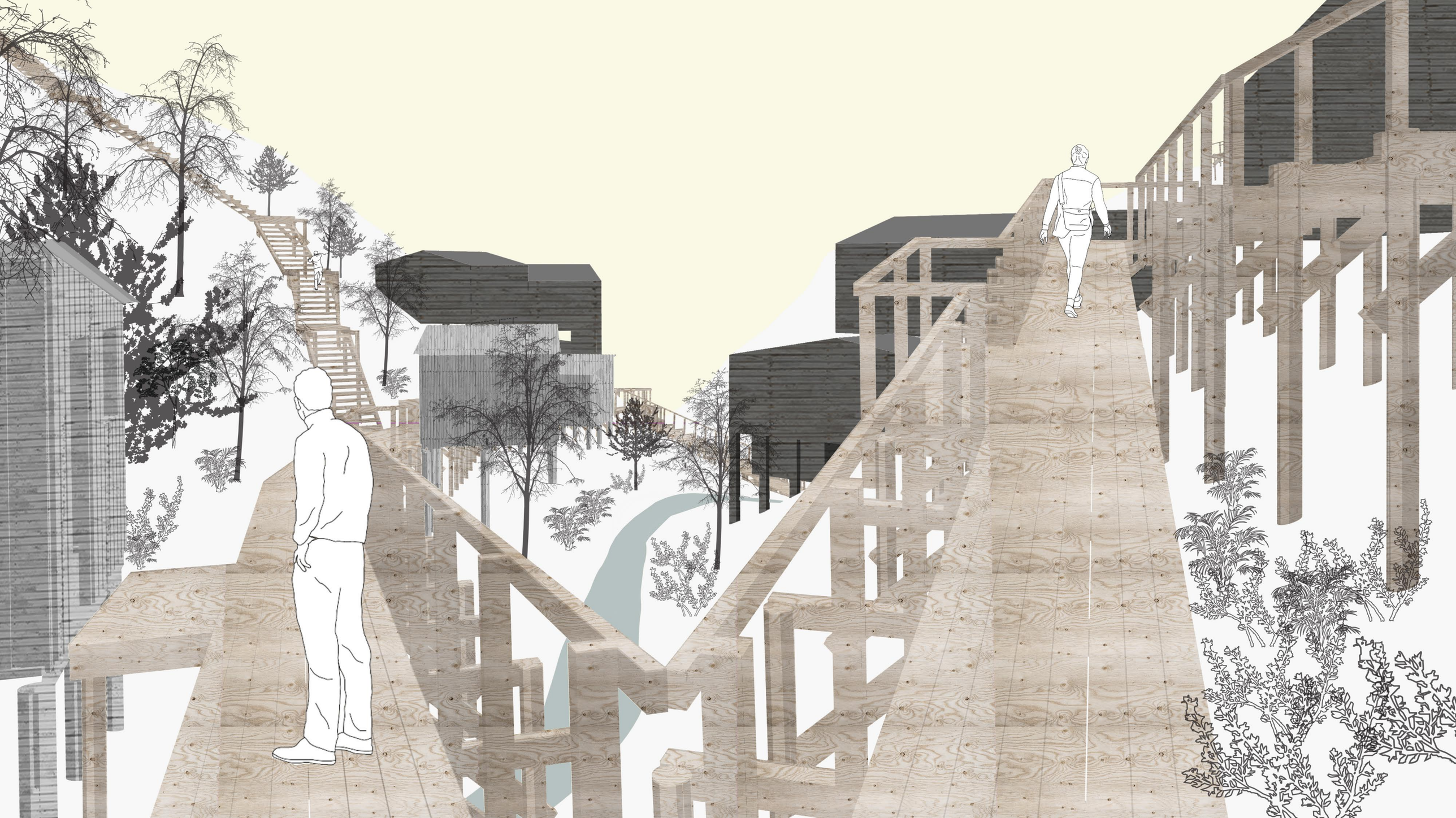

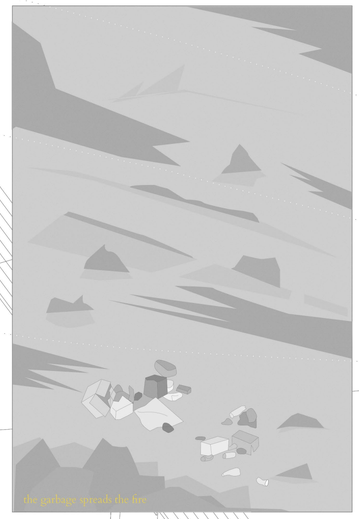
the garbage spreads the fire

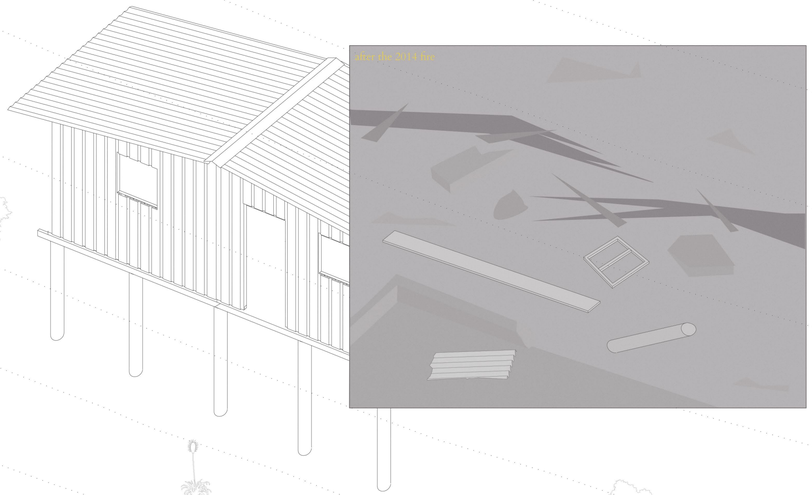
after the 2014 fire


during construction


the game day

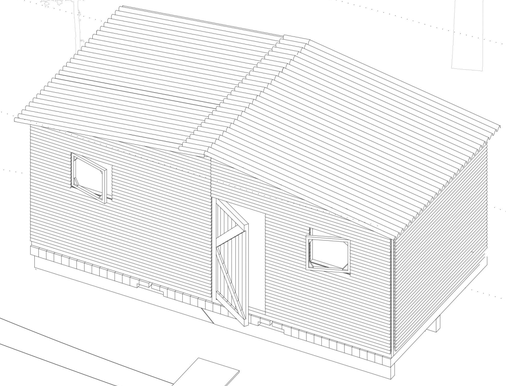

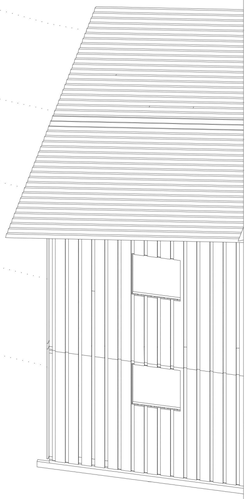

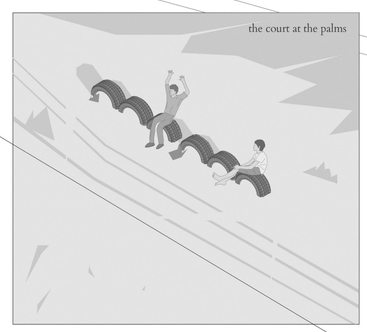
the court at the palms

Corrugated
Metal Sheet

Steel Rafter
Connector

Glue Laminated
Timber 15x15cm

Glue Laminated
Timber 15x15cm

Bridle Joint
Check Detail 01

Seating
Elements

Glue Laminated
Timber 15x5cm

Steel T Profile
Pile Connector

Aluminum
Gutter Profile

PVC Pipe
ø18cm

Timber Window Frame

Tongued and Grooved
Sawn Timber 13x5cm

Platform Detail
Check Detail 02

Brick Barbecue

Dry Toilet

Saw Dust
Container

Compost Bin

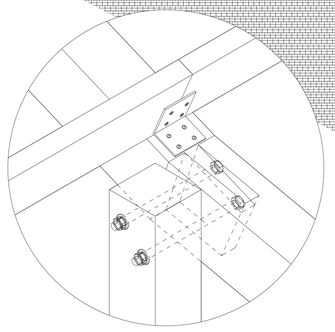

Bridle Joint
Detail 01

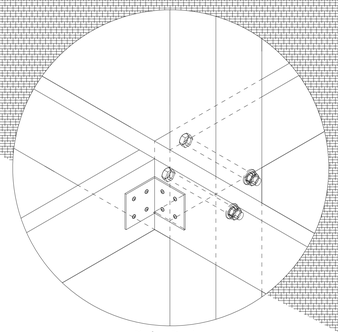

Platform Detail
Detail 02

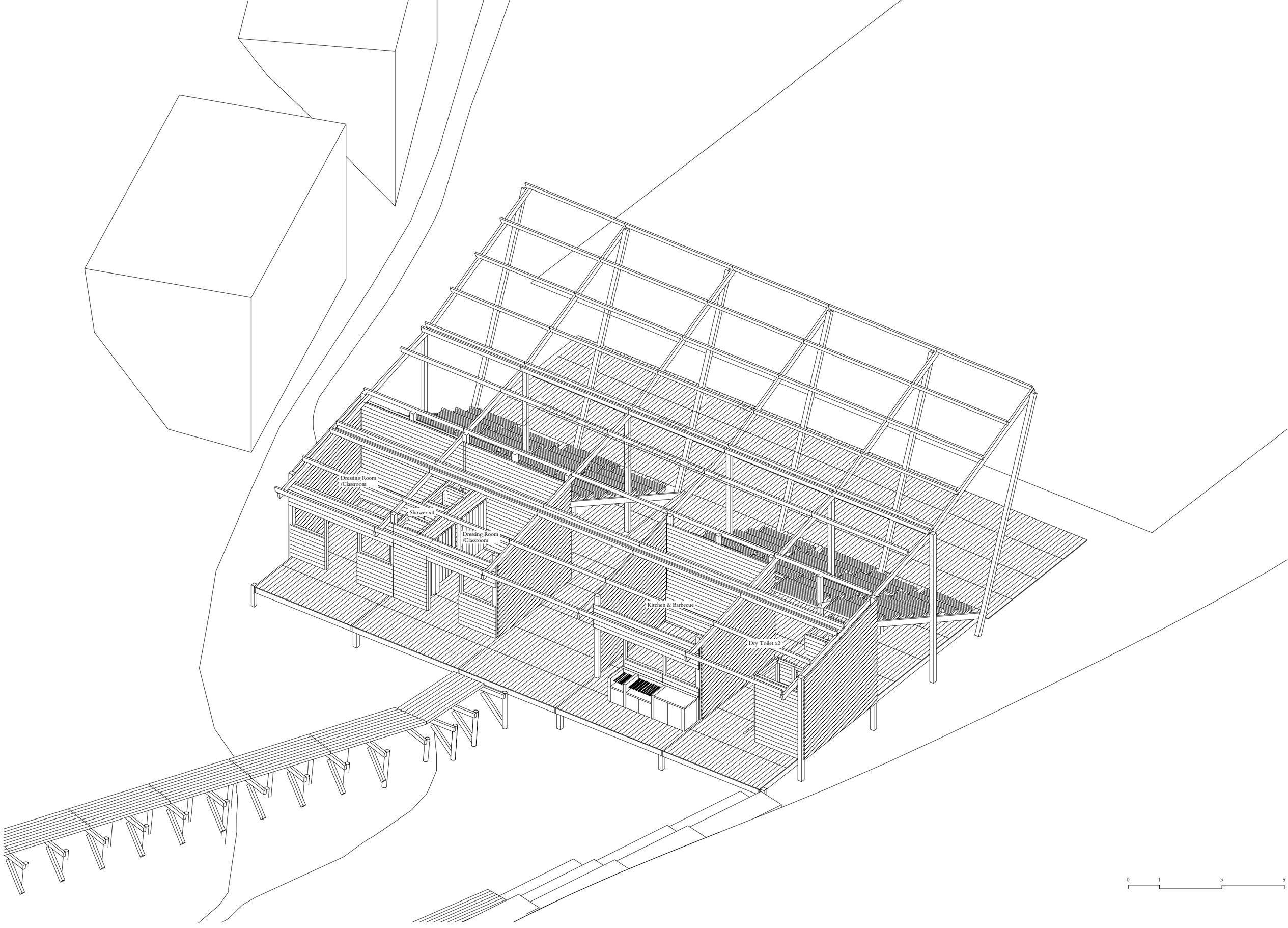
Dressing Room
/Classroom
Shower x4
Dressing Room
/Classroom
Kitchen & Barbecue
Dry Toilet x2
0
1
3
5

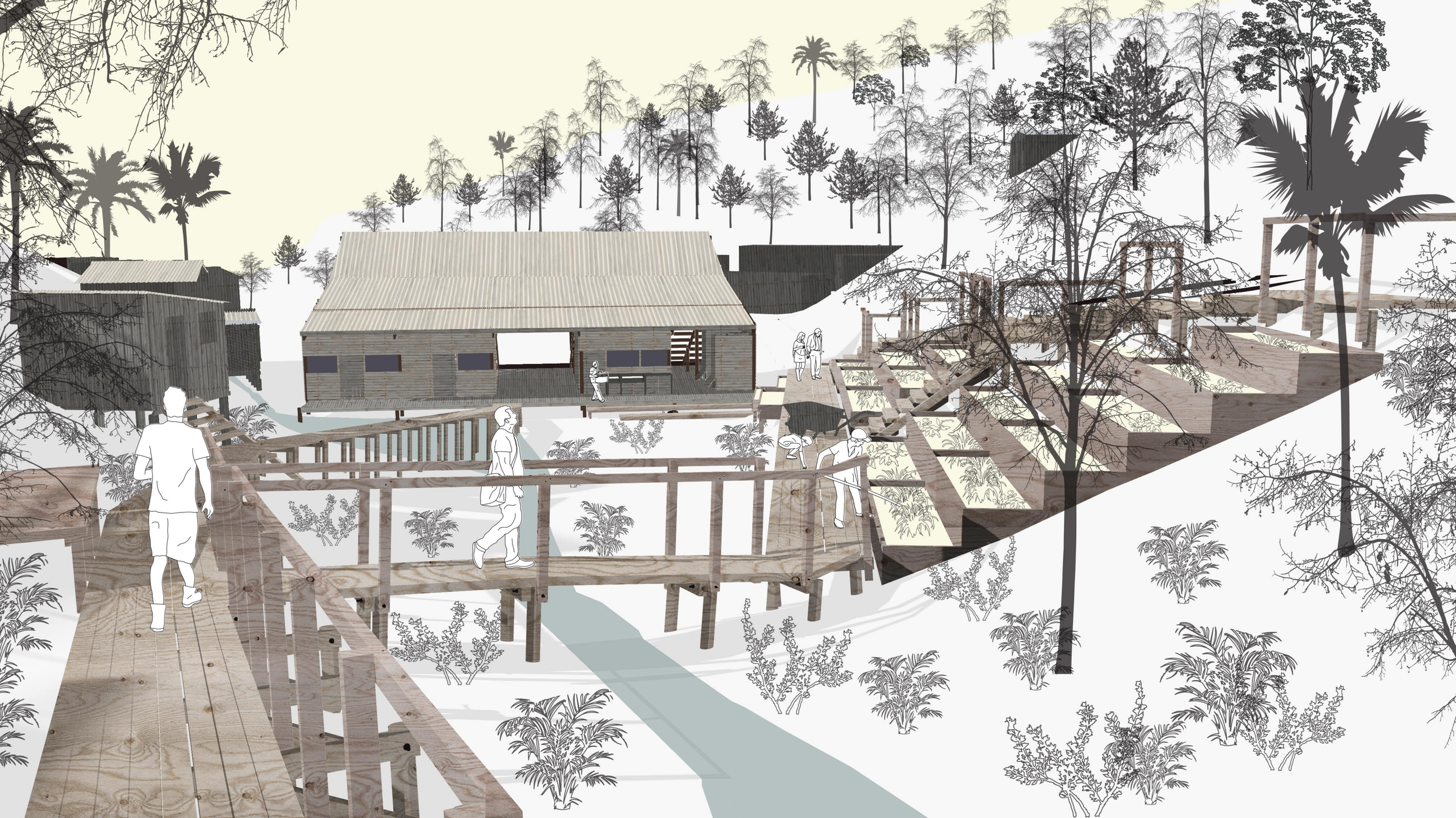

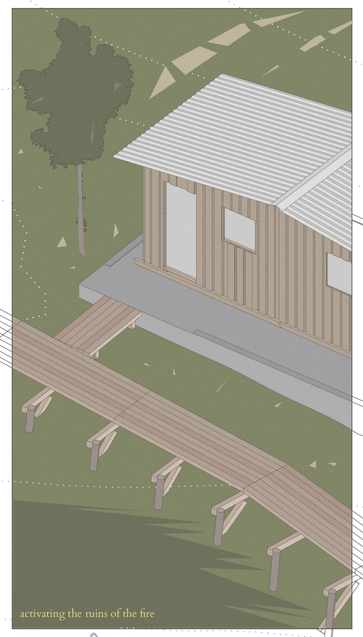

activating the ruins of the fire

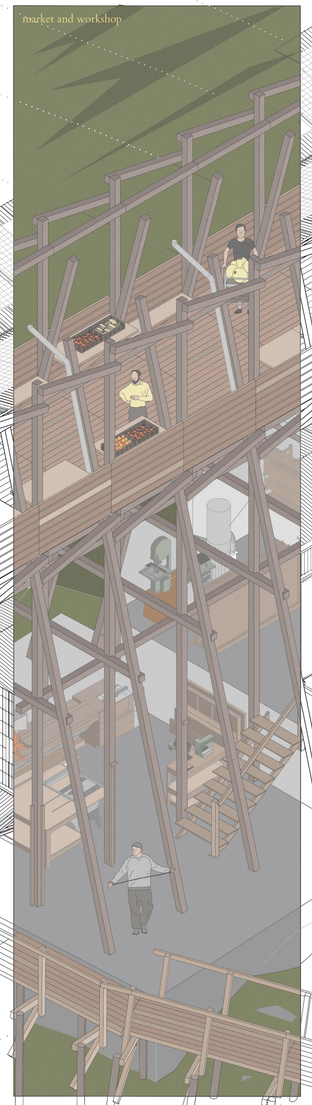

market and workshop

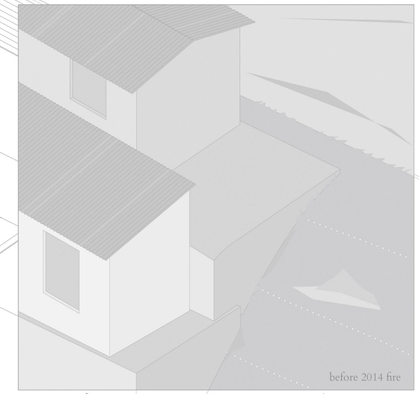

before 2014 fire

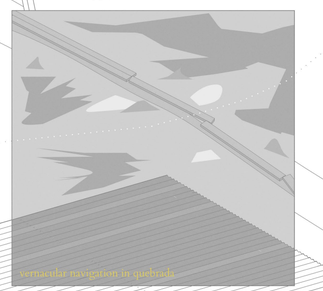

vernacular navigation in quebrada

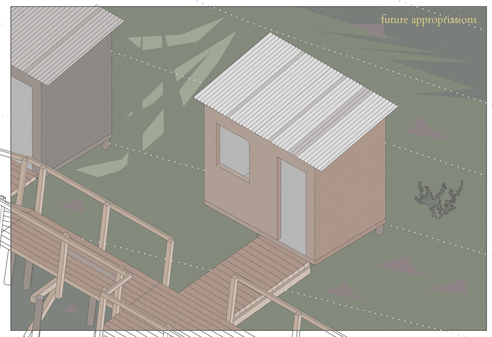

future appropriations

Photovoltaic Panel

Corrugated Metal Sheet

Glue Laminated Timber 15x5cm

Glue Laminated Timber 15x15cm

Glue Laminated Timber 15x15cm

Steel Rafter Connector

Market Stall

Sawn Timber 15x5cm

Tenon Joint
check: Detail 02

PVC Pipe ø18cm

Bridle Joint
check: Detail 01

Aluminum Gutter Profile

PVC Pipe ø12cm

Support for Timber Elements

Seating Element

Aluminum Gutter

Corrugated Metal Sheet

Half Lap Joint

Glue Laminated Timber 15x15cm

Corrugated Polycarbonate Transparent Sheet

Sawn Timber 10x5cm

Corrugated Metal Sheet

Sliding Door Panel

Vertical Folding Door Frame

Screed 5 cm

Steel T Profile Pile Connector

Concrete Platform Ruin of 2014 Fire

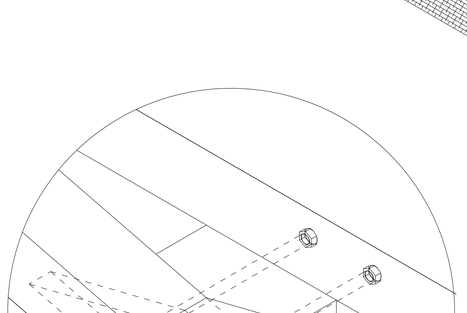

Bridle Joint
Detail 01

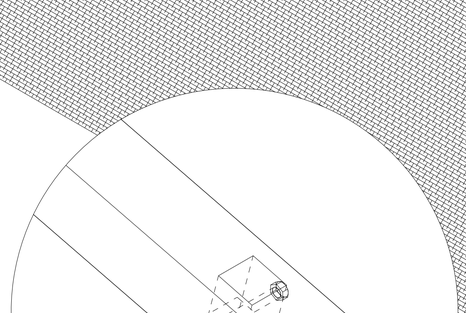

Tenon Joint
Detail 02

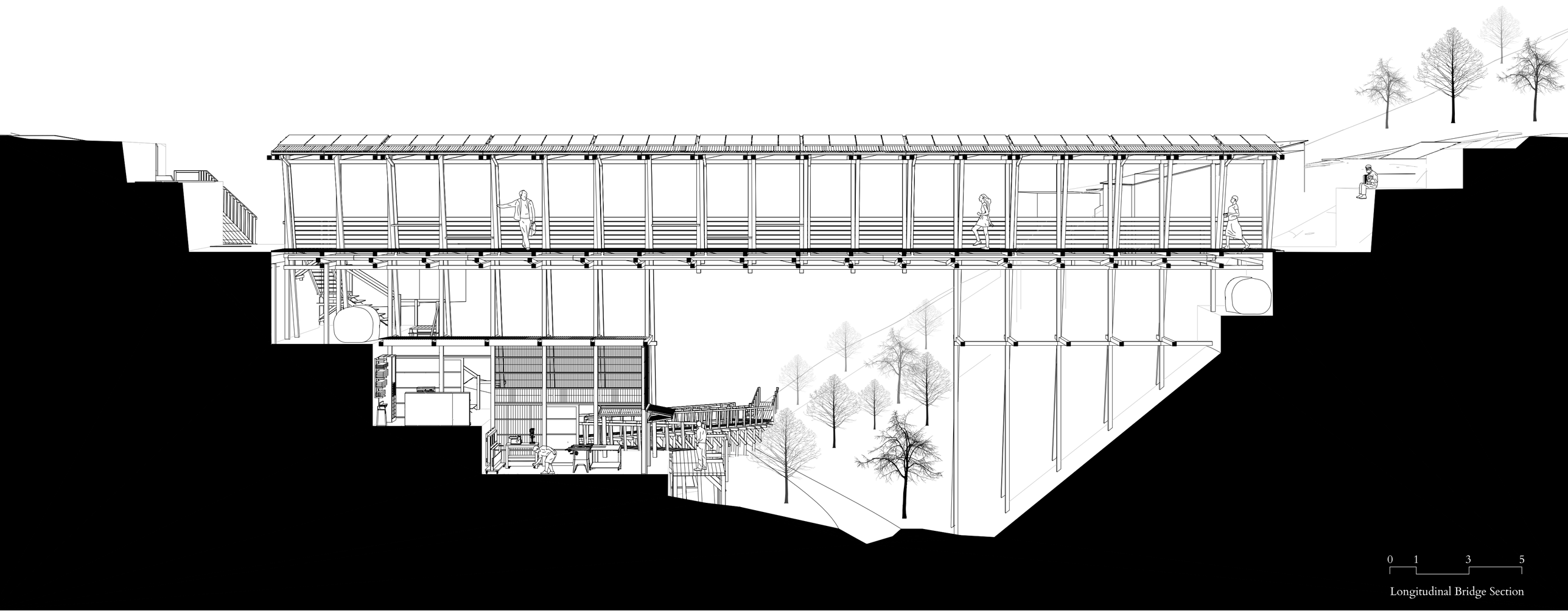

Longitudinal Bridge Section

