TU Delft

Delft University of Technology

Document Version
Final published version

Licence
CC BY

Citation (APA)
Stepchuk, I. V. (2026). *Refocusing defossilisation strategies: The role of downstream production in transforming petrochemical clusters*. [Dissertation (TU Delft), Delft University of Technology]. https://doi.org/10.4233/uuid:fb6f2b78-5e25-49ca-8ef8-0a9746247259

Important note
To cite this publication, please use the final published version (if applicable).
Please check the document version above.

Copyright
In case the licence states “Dutch Copyright Act (Article 25fa)”, this publication was made available Green Open Access via the TU Delft Institutional Repository pursuant to Dutch Copyright Act (Article 25fa, the Taverne amendment). This provision does not affect copyright ownership.
Unless copyright is transferred by contract or statute, it remains with the copyright holder.

Sharing and reuse
Other than for strictly personal use, it is not permitted to download, forward or distribute the text or part of it, without the consent of the author(s) and/or copyright holder(s), unless the work is under an open content license such as Creative Commons.

Takedown policy
Please contact us and provide details if you believe this document breaches copyrights.
We will remove access to the work immediately and investigate your claim.

This work is downloaded from Delft University of Technology.

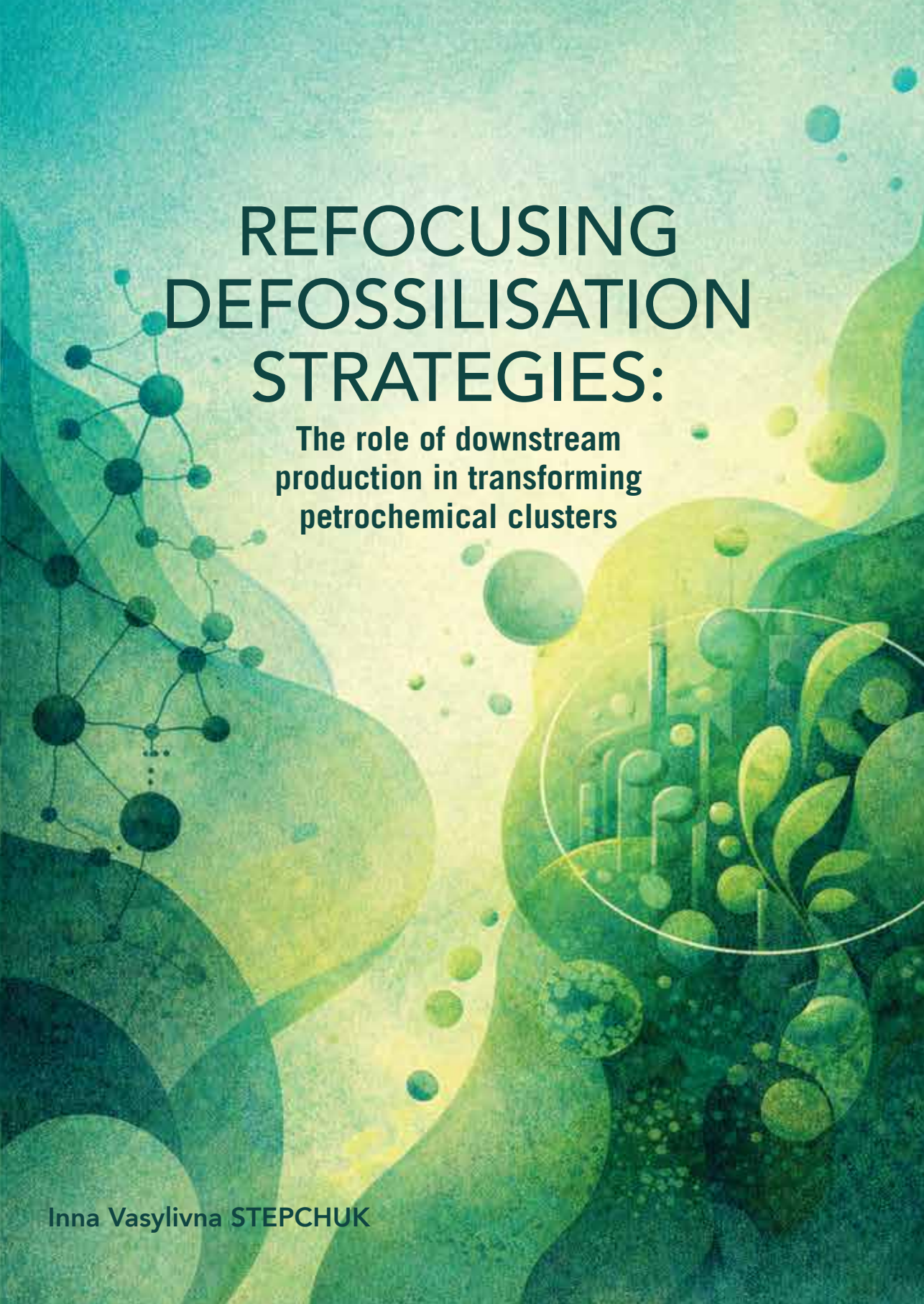

REFOCUSING DEFOSSILISATION STRATEGIES:

The role of downstream production in transforming petrochemical clusters

Inna Vasylivna STEPCHUK

Refocusing defossilisation strategies:

The role of downstream production in transforming petrochemical clusters

Inna Vasylivna STEPCHUK





This research was funded by the project “Unravelling the impacts of using alternative raw materials in industrial clusters”, project number VI.C.183.010 of the research programme VICI which is financed by the Dutch Research Council (NWO).

Key words: Industrial defossilisation, techno-economic and environmental assessment (TEE assessment), impact assessment, petrochemical cluster, Port of Rotterdam (PoR), renewable carbon, cascading impacts, trade-offs.

Copyright 2026 © Inna Stepchuk

All rights reserved. No parts of this thesis may be reproduced, stored in a retrieval system or transmitted in any form or by any means without permission of the author.

ISBN: 978-94-6563-035-9

Provided by thesis specialist Ridderprint, ridderprint.nl
Printing: Ridderprint
Layout and design: Dennis Hendriks, persoonlijkproefschrift.nl
Cover design: I.V.Stepchuk ft. Santiago Lozano

An electronic version of this dissertation is available at: http://repository.tudelft.nl

Refocusing defossilisation strategies:

The role of downstream production in transforming petrochemical clusters

Dissertation

for the purpose of obtaining the degree of doctor
at Delft University of Technology
by the authority of the Rector Magnificus,
Prof.dr.ir. H.Bijl,
chair of the Board for Doctorates
to be defended publicly on
Wednesday 23rd September 2026 at 17:30

by

Inna Vasylivna STEPCHUK

This dissertation has been approved by the (co)promotors.

Composition of the doctoral committee:

Rector Magnificus	Chairperson
Prof.dr.ir. C.A. Ramírez Ramírez	Delft University of Technology, *promotor*
Dr.ir. M.D.M. Pérez-Fortes	Delft University of Technology, *copromotor*

Independent members:

Prof.dr.ir. A.A. Kiss	Delft University of Technology
Prof.dr. A. Tukker	Leiden University
Prof.dr. G. Guillén Gosálbez	ETH Zürich, Switzerland
Dr.ir. F.E. Wubbolts	Netherlands Organisation for Applied Scientific Research (TNO)
Prof. dr. ir. W.de Jong	Delft University of Technology, *reserve member*

This thesis is dedicated to my parents, whose unconditional love and belief in me made this journey possible, and in loving memory of my father, a true engineer by birth, whose strength, perseverance, and unwavering faith taught me to never give up.

CONTENTS

	Summary	8
	Samenvatting	13
CHAPTER 1	Introduction	19
CHAPTER 2	Assessing impacts of deploying bio-based isobutene for MTBE production in an existing petrochemical cluster	35
CHAPTER 3	From feedstock to future chemicals: Rethinking carbon sources in industrial propylene clusters	65
CHAPTER 4	Navigating industrial transition: Understanding trade-offs in defossilising downstream petrochemical production	93
CHAPTER 5	Effects of operational flexibility, feedstock and land availability on the defossilisation of downstream petrochemical production	127
CHAPTER 6	Conclusions and recommendations	157
APPENDIX	Appendix A	172
	Appendix B	176
	Appendix C	179
	Appendix D	185
	Appendix E	210
	List of publications and conference appearances	236
	Curriculum Vitae	237
	Acknowledgments	238

SUMMARY

The chemical industry in the European Union remains strongly reliant on fossil-based raw materials such as oil, natural gas, and coal. This dependence poses a significant barrier to defossilisation, as reducing fossil resource use requires fundamental changes not only to feedstock supply but also to production routes and value-chain organisation. Current research predominantly targets defossilisation of the industry by focusing on the production of chemical building blocks (CBBs) from alternative carbon sources (ACS), including biomass, CO_2, and waste. Downstream derivatives (DDs), such as styrene, propylene glycols, and polyols, can also be produced directly from ACS, offering additional opportunities for defossilisation. While such production routes have begun to attract industry interest, their broader implications for deployment within the existing petrochemical clusters remain insufficiently explored.

This dissertation addresses this gap by systematically assessing the cascading impacts that arise when fossil-based DD production is replaced with ACS-based alternatives in interconnected industrial systems. A dedicated methodological framework is developed and applied to evaluate these impacts across different system levels. The analysis is based on a model of a representative petrochemical cluster that reflects the existing structure and interdependencies in the Port of Rotterdam, the Netherlands. A production-oriented or territorial-based approach was selected to assess the effects of process replacement within an industrial cluster, such as material and energy flows, water consumption, and emissions. The base scenario assumes an ambitious defossilisation target, minimising fossil feedstock use while maximising the use of existing cluster assets. The work compares stand-alone and integrated value chains, analyses cascading effects at the cluster level, and identifies portfolios of ACS-based technologies that contribute to defossilisation at the cluster scale. In addition, it examines how feedstock availability, land, and operational flexibility (i.e., the ability of upstream units to adjust production in response to changes in downstream demand) influence the defossilisation potential. The main goal of the PhD dissertation was

to analyse to what extent and under what conditions defossilisation of downstream derivatives can affect system interactions and performance of a petrochemical cluster at different levels.

To accomplish the main goal, two subgoals were defined:

Subgoal 1: to evaluate and compare potential impacts of defossilising stand-alone and interlinked DDs value chains in a petrochemical cluster.

The existing literature provides limited insight into the scale-up of ACS-based DD production routes and their performance assessment as either stand-alone processes or

integrated components of industrial clusters. Consequently, the defossilisation potential of these routes is rarely quantified, and their techno-economic and environmental performance remains largely unexplored. In addition, changes in cluster configuration resulting from the deployment of such processes are seldom analysed systematically.

To address these limitations, a methodological approach was developed to evaluate and compare (i) fossil-based and ACS-based DD processes at the stand-alone level and (ii) the performance of petrochemical clusters following the replacement of fossil-based DDs with ACS-based alternatives. The approach was applied to three cluster configurations with increasing complexity: a small cluster consisting of five processes for methyl tert-butyl ether production (Chapter 2), a medium-sized cluster with nine processes forming the propylene subcluster (Chapter 3), and a large representative cluster composed of 52 interlinked processes (Chapters 4 and 5). These configurations allowed to assess how varying degrees of interconnectivity influence both the magnitude and propagation of cascading effects. All processes (fossil and ACS-based) were modelled in Aspen Plus, which provides the equipment list, mass and energy balances that are required in the assessment. For details on the models used, please see the different chapters.

The analysis combines the evaluation of techno-economic and environmental performance indicators (KPIs) at the process level with a cluster-level analysis of cascading impacts, supported by graphical representations. Techno-economic KPIs included the amount of carbon entering the cluster (carbon feedstock), capital expenditures (CAPEX), operational expenditures (OPEX) and bare land requirements. Environmental KPIs included water consumption and CO_2 emissions from Scope 1 (process) and Scope 2 (energy-related). In addition, KPIs are compared between fossil-based and defossilised cluster configurations. This multi-level perspective provides insight into how individual ACS-based DD processes, as well as combinations of such processes, affect overall cluster performance.

The results in Chapters 2 and 3 show that ACS-based DD processes can partially or fully defossilise existing DD production when assessed as stand-alone systems. Relatively simple processes, such as CO_2-based polyol production and bio-based propylene glycol production, exhibit improved performance compared with their fossil-based counterparts. More complex processes, such as bio-isobutene production, are less competitive due to higher capital and operating costs. When deployed individually within an existing cluster, ACS-based DD processes do not significantly affect upstream production levels, resulting in fossil-based carbon input comparable to that of the reference cluster. By contrast, the simultaneous deployment of multiple ACS-based DD processes leads to cumulative, cascading impacts that affect shared upstream units, as shown in Chapters 3 and 4. These impacts are most pronounced in smaller clusters, where replacing several downstream processes can trigger extensive system restructuring and require substantial additional investment. In such cases, defossilisation may involve the partial or complete removal of upstream fossil-based units.

As an example, defossilising the propylene subcluster (Chapter 3) in the Port of Rotterdam using ACS-based routes for polyol, propylene glycol, methyl tert-butyl ether, and propylene oxide production results in the restructuring of approximately 80% of the subcluster, as well as the removal of the olefins unit, under the assumption that this unit supplies only the propylene subcluster. When the system boundary is expanded to include the full cluster (Chapter 4), the olefins unit remains in operation due to its interconnections with other subclusters, such as ethylene production, but is strongly affected by reduced downstream demand. Similarly, combining waste-to-styrene production with a process that substitutes polyethylene terephthalate, namely poly(lactic-co-glycolic) acid production, eliminates the aromatics unit and reduces fossil-based carbon input to the cluster by 45%.

Investment requirements also vary with cluster size and level of integration. In the small and medium-sized clusters assessed in this work (Chapters 2 and 3), the additional investment required for defossilisation amounted to approximately three times the cluster's original CAPEX, whereas in the large representative cluster (Chapters 4 and 5), only around 30% additional investment is required. Furthermore, integrating ACS-based DD processes reshapes feedstock flows, product outputs, and energy use, leading to changes in minimum selling prices. CO_2 emissions are strongly influenced by process energy demand and by the carbon intensity of the utility supply, highlighting the importance of defossilising both production processes and the supporting energy system. Reduced downstream demand for fossil-based intermediates may also lead to overproduction in upstream units, raising questions regarding the appropriate scaling of existing capacity. Moreover, deploying ACS-based processes requires additional land, in some cases, amounting to up to half of the current cluster area, as indicated in Chapter 4.

Overall, the analysis demonstrates that the performance of ACS-based DD processes differs substantially when evaluated in isolation or as part of a cluster. Achieving high levels of defossilisation, therefore, requires careful consideration of cluster layout, process interconnectivity, and coordinated deployment of multiple ACS-based technologies.

Subgoal 2: to identify and assess possible implications of defossilising DDs at a cluster level under varying conditions.

The simultaneous deployment of multiple ACS-based processes may be constrained by feedstock availability, land requirements, and the ability of upstream units to respond to changes in downstream demand. These factors can limit both the feasibility and effectiveness of defossilisation at the cluster level and, therefore, require explicit assessment.

To evaluate these effects, a petrochemical cluster with 52 processes was analysed under four scenarios (see Chapter 5). The INFLEX scenario assumes inflexible operation of upstream units. The FLEX scenario allows upstream production to be reduced by up to 30%. The FEED scenario limits ACS availability to 75%, 50%, and 25% of the maximum

available in the Netherlands. The LAND scenario allows cluster expansion of 10%, 20%, or 30% to accommodate new processes. In all scenarios, ACS-based DD processes were deployed simultaneously using a superstructure multi-objective optimisation model to minimise: a) the amount of fossil-based carbon entering the cluster, and b) the additional capital expenditure required.

The results show that under the constraints studied, fossil-based carbon input to the cluster can be reduced by approximately 50%. In the INFLEX scenario, upstream overproduction persists due to limited adaptability. In contrast, the FLEX scenario enables upstream units to adjust production, resulting in substantially lower fossil-based carbon input to the cluster. A 30% reduction in upstream output leads to an approximate 65% decrease in fossil-based carbon entering the system. Although constraints influence both the number of processes deployed and the selection of ACS-based technologies, the dominant technology combinations remain consistent across the scenarios. These include waste-to-styrene production and poly(lactic-co-glycolic) acid production, combined with bio-based monoethylene glycol, propylene glycol, and propylene oxide production. These options require relatively limited feedstock, land, and additional investment, while significantly reducing production levels in upstream olefins and aromatics units and thereby reducing fossil carbon input.

Conclusions

Overall, the results indicate that deploying ACS-based DD processes can reduce up to half of the fossil-based carbon input to an existing petrochemical cluster. The reduction depends on the cluster's initial configuration, the combination of deployed technologies, and their performance under operational constraints. The findings underline the importance of integrated assessments at the cluster level and highlight the need for future analyses that explicitly account for brownfield conditions and real industrial interconnections.

This thesis shows that defossilisation at the cluster level cannot be understood by looking at individual processes in isolation. Although ACS-based downstream technologies may seem efficient at smaller scale, their integration into existing petrochemical clusters changes material flows, energy systems, and upstream demand. The impacts on the level of defossilisation therefore depend strongly on cluster structure: simpler clusters seem to respond more directly to individual process changes and show stronger cascading effects, while complex and highly interconnected clusters require coordinated changes across several processes to achieve substantial reductions in fossil-based carbon requirement at the cluster level.

Cascading effects are central, but not linear. They range from minor adjustments to major structural changes and involve trade-offs between costs, emissions, energy demand, and land use. When sufficiently strong, they drive defossilisation of the cluster by altering fossil-based upstream production. Therefore, comparing cluster structures is essential

to identify conditions that enable effective defossilisation. Land availability, feedstock supply, and operational flexibility shape how defossilisation is implemented, but they do not prevent it. Overall, up to 50% of fossil carbon input can be replaced through coordinated integration of ACS-based technologies, showing that defossilisation is a system-level challenge rather than a matter of individual technology choices.

Finally, this dissertation shows that the defossilisation of the chemical industry can be driven by replacing downstream processes. Understanding this potential requires moving beyond single-process assessments to portfolio-based evaluation, and recognising that the performance of ACS-based routes is shaped by their integration within existing industrial clusters, including shared utilities and operational interconnections. A critical challenge, however, is the potential overproduction of fossil-based upstream chemicals following downstream defossilisation, for which no clear mitigation strategy exists. Addressing this challenge demands closer integration of techno-economic modelling with a more explicit understanding of (local) industrial decision-making and operational flexibility.

SAMENVATTING

De chemische industrie in de Europese Unie blijft sterk afhankelijk van fossiel gebaseerde grondstoffen zoals olie, aardgas en steenkool. Deze afhankelijkheid vormt een significante barrière voor defossilisering, aangezien het verminderen van het gebruik van fossiele grondstoffen fundamentele veranderingen vereist, niet alleen in de aanvoer van grondstoffen maar ook in productieroutes en de organisatie van de waardeketen. Huidig onderzoek richt zich voornamelijk op defossilisering van de industrie door te focussen op de productie van chemische bouwstenen (CBB's) uit alternatieve koolstofbronnen (ACS), waaronder biomassa, CO_2 en afval. Downstream derivaten (DD's), zoals styreen, propyleenglycolen en polyolen, kunnen ook direct uit ACS worden geproduceerd, wat aanvullende mogelijkheden biedt voor defossilisering. Hoewel dergelijke productieroutes de interesse van de industrie beginnen te wekken, blijven de bredere implicaties van hun toepassing binnen bestaande petrochemische clusters onvoldoende onderzocht.

Dit proefschrift pakt deze leemte aan door systematisch de cascaderende effecten te beoordelen die ontstaan wanneer fossiel gebaseerde DD-productie wordt vervangen door ACS-gebaseerde alternatieven in onderling verbonden industriële systemen. Een specifiek methodologisch raamwerk wordt ontwikkeld en toegepast om deze effecten op verschillende systeemniveaus te evalueren. De analyse is gebaseerd op een model van een representatief petrochemisch cluster dat de bestaande structuur en onderlinge afhankelijkheden in de haven van Rotterdam, Nederland, weerspiegelt. Er is gekozen voor een productiegerichte of territoriale benadering om de effecten van de vervanging van een proces binnen een industrieel cluster te beoordelen, zoals de impact op materiaal- en energiestromen, waterverbruik en emissies. Het basisscenario gaat uit van een ambitieuze doelstelling voor defossilisering, waarbij het gebruik van fossiele grondstoffen wordt geminimaliseerd en het gebruik van bestaande activa binnen het cluster wordt gemaximaliseerd. Het werk vergelijkt zelfstandige en geïntegreerde waardeketens, analyseert cascaderende effecten op clusterniveau en identificeert portefeuilles van ACS-gebaseerde technologieën die bijdragen aan defossilisering op clusterniveau. Daarnaast onderzoekt dit proefschrift hoe de beschikbaarheid van grondstoffen, land en operationele flexibiliteit (dat wil zeggen, het vermogen van upstream-eenheden om productie aan te passen als reactie op veranderingen in downstream vraag) het defossiliseringspotentieel beïnvloeden.

Het hoofddoel van het proefschrift was

om te analyseren in welke mate en onder welke omstandigheden defossilisering van downstream derivaten de systeeminteracties en prestaties van een petrochemisch cluster op verschillende niveaus kan beïnvloeden.

Om het hoofddoel te bereiken, werden twee subdoelen gedefinieerd:

Subdoel 1: het evalueren en vergelijken van potentiële effecten van defossilisering van zelfstandige en onderling verbonden DD-waardeketens in een petrochemisch cluster.

De bestaande literatuur biedt beperkt inzicht in het opschalen van ACS-gebaseerde DD-productieroutes en de evaluatie van hun prestaties als zelfstandige processen of als geïntegreerde componenten van industriële clusters. Als gevolg daarvan wordt het defossiliseringspotentieel van deze routes zelden gekwantificeerd en blijft hun techno-economische en milieuprestatie grotendeels niet onderzocht. Daarnaast worden veranderingen in clusterconfiguratie als gevolg van de inzet van dergelijke processen zelden systematisch geanalyseerd.

Om deze beperkingen aan te pakken, werd een methodologische benadering ontwikkeld om (i) zelfstandige fossiel gebaseerde en ACS-gebaseerde DD-processen te evalueren en te vergelijken, en (ii) de prestaties van petrochemische clusters te beoordelen na vervanging van fossiel gebaseerde DD's door ACS-gebaseerde alternatieven. De benadering werd toegepast op drie clusterconfiguraties met toenemende complexiteit: een klein cluster bestaande uit vijf processen voor methyl tert-butylether productie (Hoofdstuk 2), een middelgroot cluster met negen processen die het propyleensubcluster vormen (Hoofdstuk 3), en een groot representatief cluster samengesteld uit 52 onderling verbonden processen (Hoofdstukken 4 en 5). Deze configuraties maakten het mogelijk om te beoordelen hoe verschillende graden van onderlinge verbondenheid zowel de omvang als de verspreiding van cascaderende effecten beïnvloeden. Alle processen (fossiel en ACS-gebaseerd) werden gemodelleerd in Aspen Plus, wat de apparatenlijst en de massa- en energiebalansen levert die nodig zijn voor de beoordeling. Voor details over de gebruikte modellen wordt verwezen naar de verschillende hoofdstukken.

De analyse combineert de evaluatie van techno-economische en milieuprestatie-indicatoren (KPI's) op procesniveau met een analyse van cascaderende effecten op clusterniveau, ondersteund door grafische representaties. Techno-economische KPI's omvatten de hoeveelheid koolstof die het cluster binnenkomt (koolstofgrondstof), kapitaaluitgaven (CAPEX), operationele uitgaven (OPEX) en onbebouwd landgebruik. Milieu-KPI's omvatten waterverbruik en CO_2- emissies uit Scope 1 (proces) en Scope 2 (energie-gerelateerd). Daarnaast worden KPI's vergeleken tussen fossiel gebaseerde en gedefossiliseerde clusterconfiguraties. Dit multi-niveau perspectief geeft inzicht in hoe individuele ACS-gebaseerde DD-processen, evenals combinaties van dergelijke processen, de algehele clusterprestatie beïnvloeden.

De resultaten in Hoofdstukken 2 en 3 tonen aan dat ACS-gebaseerde DD-processen bestaande DD-productie gedeeltelijk of volledig kunnen defossiliseren wanneer zij als zelfstandige systemen worden beoordeeld. Relatief eenvoudige processen, zoals CO_2-gebaseerde polyolproductie en bio-gebaseerde propyleenglycolproductie, vertonen verbeterde prestaties in vergelijking met hun fossiel gebaseerde tegenhangers. Complexere pro-

cessen, zoals bio-isobuteenproductie, zijn minder competitief vanwege hogere kapitaal- en operationele kosten. Wanneer ze individueel worden ingezet binnen een bestaand cluster, beïnvloeden ACS-gebaseerde DD-processen de upstream productieniveaus niet significant, wat resulteert in een fossiel gebaseerde koolstofinput die vergelijkbaar is met die van het referentiecluster. Daarentegen leidt de gelijktijdige inzet van meerdere ACS-gebaseerde DD-processen tot cumulatieve, cascaderende effecten die gedeelde upstream-eenheden beïnvloeden, zoals getoond in Hoofdstukken 3 en 4. Deze effecten zijn het meest uitgesproken in kleinere clusters, waar het vervangen van meerdere downstream processen uitgebreide systeemherstructurering kan veroorzaken en aanzienlijke extra investeringen vereist. In dergelijke gevallen kan defossilisering de gedeeltelijke of volledige verwijdering van upstream fossiel gebaseerde eenheden omvatten.

Als voorbeeld: het defossiliseren van het propyleensubcluster (Hoofdstuk 3) in de haven van Rotterdam met behulp van ACS-gebaseerde routes voor polyol-, propyleenglycol-, methyl tert-butylether- en propyleenoxide productie resulteert in de herstructurering van ongeveer 80% van het subcluster, evenals de verwijdering van de olefinenunit, onder de aanname dat deze unit uitsluitend het propyleensubcluster voorziet. Wanneer de systeemgrens wordt uitgebreid naar het volledige cluster (Hoofdstuk 4), blijft de olefinenunit in bedrijf vanwege haar onderlinge verbindingen met andere subclusters, zoals subclusters die ethyleen als grondstof gebruiken, maar wordt zij sterk beïnvloed door verminderde downstream vraag. Op vergelijkbare wijze leidt de combinatie van een afval-naar-styreenproductieproces met een proces dat polyethyleentereftalaat vervangt, namelijk poly(melkzuur-co-glycolzuur) productie (PLGA), tot het elimineren van de aromatenunit en een reductie van de fossiel gebaseerde koolstofinput in het cluster met 45%.

Investeringsvereisten variëren ook met clustergrootte en niveau van integratie. In de kleine en middelgrote clusters die in dit werk zijn beoordeeld (Hoofdstukken 2 en 3), bedroeg de extra investering voor defossilisering ongeveer drie keer de oorspronkelijke CAPEX van het cluster, terwijl in het grote representatieve cluster (Hoofdstukken 4 en 5) slechts ongeveer 30% extra investering vereist is. Bovendien verandert de integratie van ACS-gebaseerde DD-processen grondstofstromen, productstromen en energiegebruik, wat leidt tot veranderingen in minimumverkoopprijzen. CO_2-emissies worden sterk beïnvloed door de energievraag van processen en door de koolstofintensiteit van de energievoorziening, wat het belang benadrukt van het defossiliseren van zowel productieprocessen als het ondersteunende energiesysteem. Verminderde downstream vraag naar fossiel gebaseerde intermediairen kan ook leiden tot overproductie in upstream-eenheden, wat vragen oproept over de juiste dimensionering van bestaande capaciteit. Bovendien vereist de inzet van ACS-gebaseerde processen extra land, in sommige gevallen oplopend tot de helft van het huidige clusteroppervlak, zoals aangegeven in Hoofdstuk 4.

Over het algemeen toont de analyse aan dat de prestatie van ACS-gebaseerde DD-processen aanzienlijk verschilt wanneer deze geïsoleerd worden geëvalueerd of als onderdeel van

een cluster. Het bereiken van hoge niveaus van defossilisering vereist daarom zorgvuldige afweging van clusteropzet, onderlinge verbondenheid van processen en gecoördineerde inzet van meerdere ACS-gebaseerde technologieën.

Subdoel 2: het identificeren en beoordelen van mogelijke implicaties van het defossiliseren van DD's op clusterniveau onder variërende omstandigheden.

De gelijktijdige inzet van meerdere ACS-gebaseerde processen kan worden beperkt door beschikbaarheid van grondstoffen, beschikbaarheid van grond en het vermogen van upstream-eenheden om te reageren op veranderingen in downstream vraag. Deze factoren kunnen zowel de haalbaarheid als de effectiviteit van defossilisering op clusterniveau beperken en vereisen daarom expliciete beoordeling.

Om deze effecten te evalueren, werd een petrochemisch cluster met 52 processen geanalyseerd onder vier scenario's (zie Hoofdstuk 5). Het INFLEX-scenario gaat uit van inflexibele werking van upstream-eenheden. Het FLEX-scenario laat toe dat upstream productie tot 30% wordt verlaagd. Het FEED-scenario beperkt de beschikbaarheid van ACS tot 75%, 50% en 25% van het maximum dat beschikbaar is in Nederland. Het LAND-scenario staat clusteruitbreiding van 10%, 20% of 30% toe om nieuwe processen te huisvesten. In alle scenario's werden ACS-gebaseerde DD-processen gelijktijdig ingezet met behulp van een superstructure-gebaseerd multi-objective optimalisatiemodel om te minimaliseren: a) de hoeveelheid fossiel gebaseerde koolstof die het cluster binnenkomt en b) de extra kapitaaluitgaven die vereist zijn.

De resultaten tonen aan dat onder de onderzochte beperkingen de fossiel gebaseerde koolstofinput in het cluster met ongeveer 50% kan worden verminderd. In het INFLEX-scenario blijft upstream overproductie bestaan door beperkte aanpasbaarheid. Daarentegen maakt het FLEX-scenario het mogelijk dat upstream-eenheden hun productie aanpassen, wat resulteert in aanzienlijk lagere fossiel gebaseerde koolstofinput in het cluster. Een reductie van 30% in upstream output leidt tot een afname van ongeveer 65% van fossiel gebaseerde koolstof die het systeem binnenkomt. Hoewel beperkingen zowel het aantal ingezette processen als de selectie van ACS-gebaseerde technologieën beïnvloeden, blijven de dominante technologiecombinaties consistent over de scenario's. Deze omvatten afval-naar-styreenproductie en poly(melkzuur-co-glycolzuur)productie, gecombineerd met bio-gebaseerde mono-ethyleenglycol-, propyleenglycol- en propyleenoxideproductie. Deze opties vereisen relatief beperkte grondstoffen, land en extra investering, terwijl zij de productieniveaus in upstream olefinen- en aromatenunits aanzienlijk verminderen en daarmee de fossiele koolstofinput verlagen.

Conclusies

Over het algemeen geven de resultaten aan dat de inzet van ACS-gebaseerde DD-processen tot de helft van de fossiel gebaseerde koolstofinput in een bestaand petroche-

misch cluster kan verminderen. De reductie hangt af van de initiële configuratie van het cluster, de combinatie van ingezette technologieën en hun prestaties onder operationele beperkingen. De bevindingen onderstrepen het belang van geïntegreerde beoordelingen op clusterniveau en benadrukken de noodzaak van toekomstige analyses die expliciet rekening houden met brownfield-condities en echte industriële onderlinge verbindingen. Dit proefschrift laat zien dat defossilisering op clusterniveau niet kan worden begrepen door individuele processen geïsoleerd te bekijken. Hoewel ACS-gebaseerde downstream technologieën op kleinere schaal efficiënt lijken, verandert hun integratie in bestaande petrochemische clusters materiaalstromen, energiesystemen en upstream vraag. De impact op het niveau van defossilisering hangt daarom sterk af van de clusterstructuur: eenvoudigere clusters lijken directer te reageren op individuele procesveranderingen en tonen sterkere cascaderende effecten, terwijl complexe en sterk onderling verbonden clusters gecoördineerde veranderingen over meerdere processen vereisen om aanzienlijke reducties in fossiel gebaseerde koolstofbehoefte op clusterniveau te bereiken.

Cascaderende effecten zijn centraal, maar niet lineair. Ze variëren van kleine aanpassingen tot grote structurele veranderingen en omvatten afwegingen tussen kosten, emissies, energievraag en landgebruik. Wanneer zij voldoende sterk zijn, sturen zij de defossilisering van het cluster door fossiel gebaseerde upstream productie te veranderen. Daarom is het vergelijken van clusterstructuren essentieel om voorwaarden te identificeren die effectieve defossilisering mogelijk maken. Beschikbaarheid van land, aanvoer van grondstoffen en operationele flexibiliteit bepalen hoe defossilisering wordt uitgevoerd, maar verhinderen deze niet. Over het algemeen kan tot 50% van de fossiele koolstofinput worden vervangen door gecoördineerde integratie van ACS-gebaseerde technologieën, wat aantoont dat defossilisering een uitdaging op systeemniveau is in plaats van een kwestie van individuele technologiekeuzes.

Ten slotte laat dit proefschrift zien dat defossilisering van de chemische industrie kan worden gestuurd door het vervangen van downstream processen. Het begrijpen van dit potentieel vereist een verschuiving van beoordelingen van afzonderlijke processen naar portfolio-gebaseerde evaluatie, en het erkennen dat de prestaties van ACS-gebaseerde routes worden bepaald door hun integratie binnen bestaande industriële clusters, inclusief gedeelde utilities en operationele onderlinge verbindingen. Een belangrijke uitdaging is echter de mogelijke overproductie van fossiel gebaseerde upstream chemicaliën na downstream defossilisering, waarvoor geen duidelijke mitigatiestrategie bestaat. Het aanpakken van deze uitdaging vraagt om een nauwere integratie van techno-economische modellering met een explicieter begrip van (lokale) industriële besluitvorming en operationele flexibiliteit.



CHAPTER 1

Introduction

1. INTRODUCTION

1.1 International and local context

Chemicals are ubiquitously represented in our modern world, being an essential part of our daily activities. Nevertheless, production of chemicals remains highly energy and resource-intensive, requiring large amounts of fossil-carbon intake, which leads to high greenhouse gas emissions (GHG) [1]. In 2021, emissions from the chemical sector accounted for 6.5% of the global GHG emissions [2]. European chemical production holds the second position worldwide, and it is expected to still rank among the first three places by 2030 [3,4]. The main products are chemical building blocks (CBB) (26%) and downstream derivatives (DD) (27%) [4]. Since 2012, the EU has taken measures to decrease GHG emissions, achieving a 9-15% reduction. However, the sector remains a significant GHG emitter, accounting for nearly 156 Mt CO_2-eq, primarily coming from fuel combustion (67%) and industrial processes (33%) [5].

The Netherlands is the fourth-largest chemical producer in Europe, with more than 415 chemical companies involved [6]. The companies are located within five petrochemical clusters: Rotterdam-Moerdijk, Chemelot, North Netherlands, Zeeland (West-Brabant), and Noordzeekanaalgebied [7]. Three out of five (i.e., Rotterdam, Zeeland, and Chemelot) are also part of the so-called Antwerp-Rotterdam-Rhein-Ruhr Area zone, which involves collaboration between the chemical industry and the Antwerp and Rhine-Ruhr areas. The Rotterdam petrochemical cluster is the largest in Europe, with over 45 chemical companies located within the Port of Rotterdam area [6]. At this scale, the Dutch chemical sector represents c.a. 40% of industrial and c.a. 30% of total GHG in the Netherlands [8].

Under the Dutch Climate Act, the Netherlands aimed to reduce its overall GHG emissions by 55% by 2030 and become fully climate-neutral by 2050 relative to 1990 levels. In particular, the Dutch industrial sector aims to lower its emissions by 60% by 2030 compared to 1990 [9]. Correspondingly, the Netherlands is determined to facilitate the transition of the carbon-intensive industry towards low-emission technologies and resilient value chains, e.g. employment of alternative carbon sources (ACS), such as biomass, waste and CO_2 [10,11]. Current research mostly focuses on the defossilisation of the utilities in the chemical industry [12,13], yet efforts are also directed toward defossilising chemical production itself [14]. The application of ACS could potentially defossilise chemical production at each stage of a petrochemical value chain: from replacing feedstock for bulk chemicals production to replacing inputs for intermediate chemicals or downstream derivatives [15].

1.2 Project context

This PhD research is part of the NWO VICI project “Unravelling the impacts of using alternative raw materials in industrial clusters” (2019-2025). The project aims to develop a knowledge-based framework for assessing the cascading impacts of deploying ACS-based technologies in highly integrated petrochemical clusters, and assessing potential

consequences at the technological and cluster levels [16]. Three PhDs were involved in the project. PhD1 aimed to assess the potential impacts of defossilising chemical building blocks (CBBs) using ACS-based routes. The second PhD, this thesis, focused on assessing potential impacts of defossilising downstream derivatives (DDs). The knowledge generated by the two PhDs feeds into a third PhD (PhD3), which focused on developing an optimisation model that integrates alternative routes for CBB and DD to assess system-level impacts of defossilising a petrochemical cluster.

1.3 Downstream derivatives

The petrochemical cluster involves a diverse range of chemicals, including CBBs, by-products, intermediates, and DDs (see Figure 1). The latter are the final chemicals or products present at the end of the value chain before they are distributed to potential customers. Literature presents a broad range of terms and definitions for downstream derivatives. In this thesis, a DD is defined as "*a product presented in or toward the latter stages of a usually industrial process or the stages after manufacture*" [17,18]. Examples of downstream derivatives are, among others, rigid and flexible foams (e.g., polyols, polyurethanes), additives (e.g., methyl tert-butyl ether (MTBE), dimethyl ether (DME)), plastics (e.g., polyethylene terephthalate (PET), styrene, polypropylene), and lubricants (e.g., propylene and ethylene glycols (PG and MEG), propylene and ethylene glycol ethers (PGME and EGE) [19].

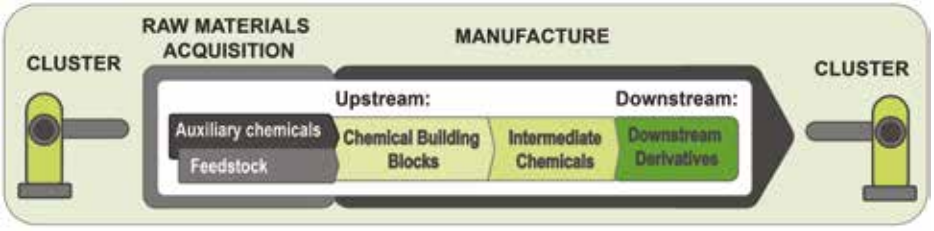

Figure 1. Overview diagram of the chemical groups manufactured in petrochemical clusters.

1.4 Potential for defossilising downstream derivatives

In recent years, alternative production of DDs has gained interest among producers and is gradually entering the market [20]. For instance, European companies like Avantium [21], Corbion [22] and Covestro [23] have launched demonstration projects to produce ACS-based alternatives. They include bioplastics like poly-lactic acid (PLA), poly(lactic-co-glycolic) acid (PLGA), polyethylene furanoate (PEF), which aim to replace fossil-based polymers such as polyethylene (PE), polyethylene terephthalate (PET), and polyols.

Literature shows that ACS-based DDs can be produced via both direct and indirect routes. A direct route is the shortest path for feedstock directly converted to DD, while an indirect route involves several conversion steps to produce a particular DD. Currently, the literature presents a significant share of indirect defossilisation pathways, in which DD are produced from conventional ACS-based CBBs such as ethanol, methanol, and ammonia [10,24,25].

Some studies indicate that indirect routes can involve novel types of CBBs [26]. For instance, ACS-based polyethylene terephthalate (PET) or polyethylene 2,5-furandicarboxylate (PEF) can be formed from biomass-derived ethylene glycol (EG) and 2,5-furandicarboxylic acid (FDCA) in place of fossil-based terephthalic acid (TPA) [26]. However, various plastics, such as bio-PET, polypropylene (PP), polyvinyl chloride PVC, can be produced via direct routes involving natural polymers (e.g. starch and cellulose) [27].

Nevertheless, achieving the complete defossilisation of DD production remains a significant challenge for both direct and indirect routes. Being at the end of the value chain, DDs' production utilises several input chemicals. To defossilise DD's production, each of the input chemicals needs to be defossilised before its use in the production of DD. However, many routes only enable partial defossilisation of DD production, as they focus on defossilising a single upstream chemical. For instance, the direct route of CO_2-based polyols production can reduce fossil-based carbon entering the DD production only by 22%, because it still requires fossil-based propylene oxide (PO) for co-polymerisation with CO_2 [28,29]. Similarly, using ACS-based methanol in PGME and MTBE production can reduce fossil carbon input by itself only c.a. 25%, as their production would still depend on fossil-based PO and isobutene.

Both ACS-based direct and indirect routes are still in their early stage of technological development (i.e., low technology readiness level (TRL)), with little to no information available for the techno-economic and environmental assessment of DDs production from ACS-based routes (i.e., styrene, polyols). Furthermore, in most studies, ACS-based technologies are expected to be developed as greenfield projects. While such projects are necessary, defossilising the current chemical industry requires integrating these technologies within the established boundaries of existing industries, thereby considering brownfield conditions. Here, there is limited knowledge on how ACS-based routes for the defossilisation of DDs will be scaled up and how they will behave at the industrial level, and thus, within the petrochemical cluster. This is at the core of the present PhD.

1.5 Defossilisation of a symbiotic petrochemical cluster

Petrochemical clusters are mature industrial structures with close interconnections (i.e. material, waste and energy flows) between processes and industries [10]. Downstream production units are highly dependent on upstream units and vice versa, see Figure 2, inside a petrochemical cluster [30]. Although a high degree of interconnections provides benefits, such as achieving high energy and materials efficiency between processes, it also limits the cluster's potential for defossilisation [14,31]. This is because integrating ACS-based technologies to defossilise DD production inside a highly interconnected cluster may result in direct or indirect cascading impacts on other production units within the cluster, leading to more complex cluster layouts and reshaping its performance [15,32].

There are different approaches and tools for studying the performance of industrial clusters, such as production-oriented or territorial-based approach, and life cycle assessment (LCA). The first approach defines the cluster as the system boundary and accounts for flows entering and leaving it, while excluding flows beyond these boundaries [33]. Here, the cluster is an interconnected production system, and the approach focuses on examining variations in physical flows of material and energy throughput, input-output dependencies, operational efficiency, and localised value chains [34,35]. In contrast, LCA is used to identify and assess environmental impacts across the full value chain, from the production of raw materials to the end-of-life of products. It provides a cradle-to-grave perspective, enabling a comprehensive comparison of environmental impacts across different scenarios [36]. However, using LCA also has limitations, including difficulties in assessing broader economic impacts and challenges in allocating environmental benefits among participating entities [37]. Moreover, LCA requires equivalent systems for comparison, which may not be possible after a cluster transformation.

Although these methodological approaches exist for assessing the impacts of disruptive events at the cluster level [15,38], there is a lack of knowledge regarding the techno-economic and environmental impacts associated with the integration of ACS-based routes [39] in highly interconnected industrial clusters. Deploying ACS-based technologies not only requires additional capital expenditures (CAPEX) but also modifies flows such as water and energy requirements of the cluster, affecting operational expenditures (OPEX) and CO_2 emissions. These impacts, therefore, need to be assessed to determine their magnitude and effects on the performance of existing industrial clusters.

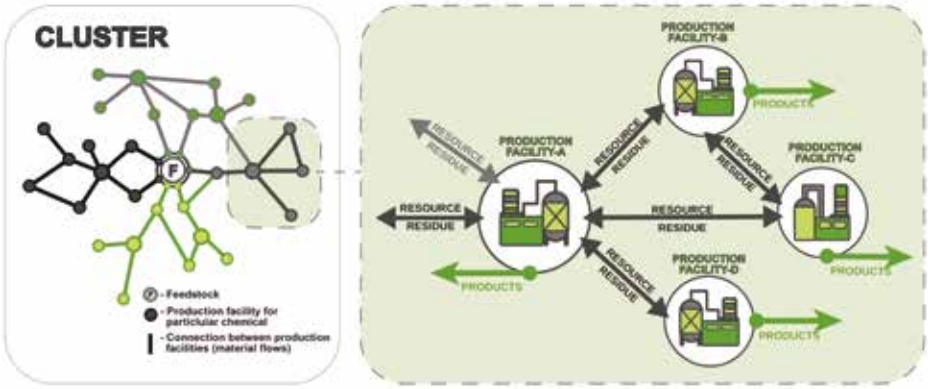

Figure 2. Schematic representation of the symbiotic interconnections (e.g., material flows) within petrochemical clusters, with a zoom on four production facilities.

To our knowledge, much of the research in industrial symbiosis has been dedicated to either assessing and increasing a cluster or company's performance by sharing waste heat, water, and materials between processes and/ or companies or creating new eco-in-

dustrial parks, while it still overlooks the potential impacts of integrating novel alternative technologies within existing symbiotic clusters [40,41]. Recent studies, such as [42], have explored the potential to integrate fossil and renewable technologies within the chemical industry, using optimisation frameworks, such as multiobjective optimisation, to reduce costs and emissions [43]. However, their focus remains primarily on deploying technologies for CBBs (e.g., methanol), overlooking DD production. Therefore, there is a need to identify the associated consequences of defossilising DDs to understand and assess the extent to which defossilisation can occur within a petrochemical cluster.

Literature also shows a lack of understanding of synergies and trade-offs in how defossilisation can be implemented in one or several locations in an existing cluster at the same time [44]. Deploying several processes simultaneously, while scaling up their production to actual fossil-based production levels, can lead to significant changes in the production of upstream chemicals, ACS feedstock availability, and energy and land requirements. ACS processes require different quantities, or even none, of fossil-based chemicals, resulting in changes in demand for the existing upstream units. The latter ones may experience challenges in reducing production capacity while maintaining their business case, requiring a full shutdown [45]. Therefore, there is a need to further explore the potential effects of variations in the operational flexibility of upstream units in the cluster. Although most research on assessing feedstock availability focuses on CBBs production, few or no studies have been conducted on DDs production [46,47]. Moreover, the scope of the assessment is often limited to a single process, with production quantities that are, in most cases, far from actual levels. Another important factor is that current industrial clusters, such as the Port of Rotterdam (PoR), face limited land availability for additional processes [48,49]. Thus, deploying ACS-based processes within an existing cluster's layout could be challenging, and an assessment is required to analyse how to integrate different ACS-based routes within the petrochemical cluster [43,50].

2. KNOWLEDGE GAPS

Defossilisation of downstream derivatives offers potential to significantly reduce the chemical sector's dependence on fossil resources. Yet, most of the ACS-based pathways for DDs production are still in their early stage of technological development, requiring scaling up to industrial scale before being integrated within existing clusters' layouts. Moreover, the impacts of defossilising one or more DDs within existing petrochemical clusters have not been sufficiently analysed. The consequences of defossilisation, such as cascading effects within the industrial cluster, are still underrepresented in the literature and therefore remain unknown. Furthermore, the impact of feedstock and land availability, along with the variations in the operational flexibility of the upstream units, on the defossilisation potential of the petrochemical cluster should be investigated. Accordingly, this thesis addresses the following knowledge gaps:

1. ***Limited understanding of the defossilisation potential of ACS-based processes for DD production at the value chain and cluster levels;***
2. ***Lack of knowledge on the impacts of defossilising DDs in existing petrochemical clusters;***
3. ***Lack of understanding of the effects of the potential limitations on land and feedstocks on the defossilisation of DDs within petrochemical clusters.***

3. RESEARCH GOALS

Considering the literature review and knowledge gaps provided, the main goal of this PhD is

to analyse to what extent and under what conditions defossilisation of downstream derivatives can affect system interactions and performance of a petrochemical cluster at different levels.

To address this goal, the following research goals are defined:

1. ***to evaluate and compare potential impacts of defossilising stand-alone and interlinked DDs value chains in a petrochemical cluster;***
2. ***to identify and assess possible implications of defossilising DDs at a cluster level under varying conditions.***

4. RESEARCH APPROACH

The study focuses on understanding how technological substitution of fossil-based downstream processes with ACS-based processes could reshape existing cluster configurations and how these changes could propagate through interconnected processes, infrastructures, and resource flows within the cluster. Therefore, a production-oriented or territorial-based approach was selected (see Section 1.5). This acknowledges that industrial clusters will have different products and product distributions and are therefore inherently not equivalent. Contrary to life cycle assessment, where product or functional unit equivalence is required, in the product-oriented or territorial-based approach, studying the consequences of not having equivalent systems is one of the main goals. Simply put, the objective of this work is not to identify what the 'best' option (existing process A vs process B) is to produce a given product, but rather to assess what happens within the industrial cluster when process B replaces process A.

In the rest of this section, we introduce the base-case model of a petrochemical cluster used in this thesis, followed by the selection of potential fossil-based DDs for defossilisation, which are then analysed. Initially, each DD production was evaluated at the process level before deployment; after integration, the performance assessment was expanded

to cover the value chain or cluster level. The final step involved identifying and analysing the impacts of defossilisation and associated trade-offs at the cluster level.

4.1 Base-case petrochemical cluster and selected DDs for defossilisation

The work employs an in-house model of a representative petrochemical cluster, which mimics the existing processes and interconnections (i.e., mass and energy) of six industrial sites in the Port of Rotterdam (PoR), the Netherlands [51]. The model consists of 52 processes modelled in Aspen Plus v12. Processes are grouped in 9 subclusters (see Figure 3): chlorine (CL), methanol (M), ethylene (E), propylene (P), nitrogen (N), aromatics (A), olefins (O), bio-based (B) and other fossil-based (i.e., utilities (U)). In Appendix A, Tables A.1 and A.2, we provide links to a repository for detailed information on the models used in this thesis, including process design, underlying model assumptions, mass and energy balances, validation and references used.

The DDs were selected based on three criteria: (i) carbon feedstock, (ii) connectivity of the processes within the cluster, and (iii) availability of data on the ACS-based routes in the literature [52]. The carbon feedstock refers to the total mass of carbon entering in the material flows for the production of DDs. The next step involved identifying the interconnections of mass flows within existing DD value chains (horizontal connections) and among value chains (vertical connections), followed by a literature review of potential ACS-based routes (i.e., from CO_2, waste, biomass) for DD production. Information was collected for each ACS-based route with a technology readiness level (TRL) of 4 or higher to ensure sufficient data for the analysis. Based on three selection criteria, six potential DDs were selected for further research (see Table 1), prioritising those with a carbon feedstock of > 40 ktonne/year and a higher number of interconnections. Preference was given to vertical over horizontal interconnections, as changes at the value chain level of those DDs were considered more likely to result in impacts at the cluster level, which is what this thesis aims to examine. Finally, the selected ACS processes were designed and scaled up to the PoR's industrial scale using a harmonised modelling procedure developed as part of the VICI project.

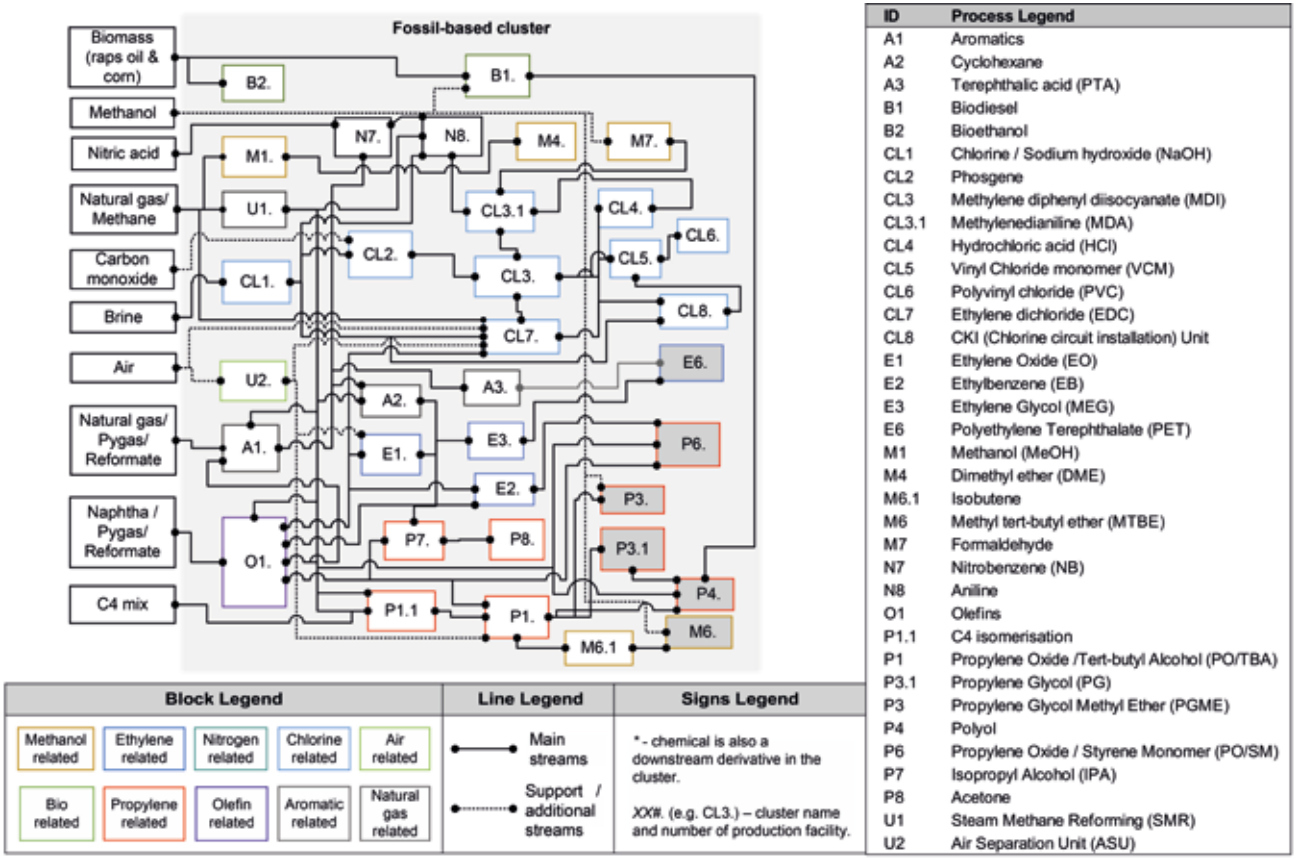

ID	Process Legend
A1	Aromatics
A2	Cyclohexane
A3	Terephthalic acid (PTA)
B1	Biodiesel
B2	Bioethanol
CL1	Chlorine / Sodium hydroxide (NaOH)
CL2	Phosgene
CL3	Methylene diphenyl diisocyanate (MDI)
CL3.1	Methylenedianiline (MDA)
CL4	Hydrochloric acid (HCl)
CL5	Vinyl Chloride monomer (VCM)
CL6	Polyvinyl chloride (PVC)
CL7	Ethylene dichloride (EDC)
CL8	CKI (Chlorine circuit installation) Unit
E1	Ethylene Oxide (EO)
E2	Ethylbenzene (EB)
E3	Ethylene Glycol (MEG)
E6	Polyethylene Terephthalate (PET)
M1	Methanol (MeOH)
M4	Dimethyl ether (DME)
M6.1	Isobutene
M6	Methyl tert-butyl ether (MTBE)
M7	Formaldehyde
N7	Nitrobenzene (NB)
N8	Aniline
O1	Olefins
P1.1	C4 isomerisation
P1	Propylene Oxide /Tert-butyl Alcohol (PO/TBA)
P3.1	Propylene Glycol (PG)
P3	Propylene Glycol Methyl Ether (PGME)
P4	Polyol
P6	Propylene Oxide / Styrene Monomer (PO/SM)
P7	Isopropyl Alcohol (IPA)
P8	Acetone
U1	Steam Methane Reforming (SMR)
U2	Air Separation Unit (ASU)

Figure 3. A schematic representation of the chemicals included in the in-house Aspen Plus v12 model of the chemical cluster. For simplicity, the figure only shows the main material flows. For detailed information on each separate process, see Appendix A, Tables A.1. and A.2.

Table 1. Downstream derivatives selected for the assessment. For more details on the selection, see [52]. The interconnections referred to current links among processes and value chains in the Port of Rotterdam.

Downstream derivative	Carbon feedstock*	Interconnections		ACS-based routes**		
name	kt/y	vertical	horizontal	CO_2	biomass	waste
P6. Styrene (SM)	914	3	11	-	+	+
M6. Methyl tert-butyl ether (MTBE)	281	2	8	+	+	+
E6. Polyethylene terephthalate (PET)	155	2	8	+	+	+
P3. Propylene glycol methyl ether (PGME)	58	4	14	+	+	+
P4. Polyols	44	4	13	+	+	-
P31. Propylene glycol (PG)	43	4	14	-	+	-

*Secondary data for calculations is taken from Aspen models.
**An overview of data availability is presented: "-" limited data; "+" available data.

4.2 Performance assessment at the value chain and cluster level

The fossil- and ACS-based processes were assessed and compared using techno-economic and environmental indicators (TEEs). The technical performance of each process was assessed based on carbon feedstock and net heat and power requirements. Capital (CAPEX) and operating (OPEX) expenditures were used for the economic evaluation. The physical space required for each process configuration was estimated based on the bare land area needed to install the main process equipment, including columns, reactors, and heat exchangers. The environmental indicators included: water consumption and CO_2 emissions, distinguishing between Scope 1 (direct process emissions) and Scope 2 (indirect emissions from energy use). As this thesis follows a production-oriented or territorial-based approach, Scope 3 emissions (other upstream and downstream emissions from use and end-of-life analysis) were not included. As a consequence, trade-offs outside the cluster-system boundaries were not examined and remain a point for future analysis. Note that any net additional utilities as a consequences of ACS deployment were assumed to be supplied under current market conditions, i.e., using fossil-based feedstocks. Sensitivity analyses on the impact of the utility carbon footprint were included to examine how this assumption affects the results.

The main (base) scenario in this thesis considers an ambitious defossilisation target, in which the cluster aims to minimise the use of fossil-based feedstocks in chemical production while making use of as many existing assets as possible. As a consequence, it was assumed that there would be no potential market for excess fossil-based products after cluster defossilisation. Thus, an unavoidable excess of by-products, for instance, resulting from joint production in some chemical processes, was assigned a zero value and treated as waste rather than being sold to maintain the business case. Although this is not a realistic scenario, especially for the short term, it allows us to explore the implications of moving away from fossil-based feedstocks. It avoids fossil emissions from the end-of-life

of those excess products being "shifted" elsewhere, making the cluster appear to perform better due to the system boundaries associated with the approach used in this thesis.

To identify the main changes in the structure of the value chains or the cluster after deploying ACS-based processes, a graphical network representation was used. The changes in the flows were categorised as (i) removed (100%), (ii) affected (the flow is reduced/increased), (iii) unchanged, or (iv) added (100% new flow). At the value chain level, the analysis of changes was carried out manually (Chapters 2 and 3); however, moving to the cluster level made the structure too complex to be handled in the same way. Therefore, an in-house superstructure optimisation model developed in the VICI project by [53] was used to assess performance at the cluster level. The optimisation was based on two objectives: minimising the total mass of fossil carbon entering the cluster through material flows and minimising the additional capital expenditure (CAPEX) required for ACS-based process deployment. The additional CAPEX expenditure (CAPEX penalty) aims to reflect two aspects: on the one hand, investments in new equipment, and on the other hand, economic losses from replacing plants before the end of their economic lifetime. Among the two objective functions, the model was set to prioritise defossilisation over the CAPEX penalty. The model evaluated the integration of ACS-based processes into the existing cluster layout, enabling their stepwise deployment while accounting for how earlier choices can limit future options. This approach generated a range of petrochemical cluster configurations and provided TEE indicators for each configuration. The configurations were assessed using graphical network representations, and their TEE indicators were compared to those of the base case.

5. OUTLINE OF THE THESIS

The research goals are addressed in four chapters, see Table 2. Goal 1 is met by assessing the deployment of processes within a stand-alone value chain (Chapter 2) and cluster (Chapters 3 and 4). These chapters examine technology deployment across increasing levels of system complexity, enabling a comparison between stand-alone and cluster-level performance. Chapters 4 and 5 are centred on Goal 2 and analyse the impacts of defossilising a cluster under different conditions. Chapter 6 concludes with an overview of the research outcomes, limitations, overall conclusions, and recommendations. A brief overview of the individual chapters is provided below.

Chapter 2 targets the first research goal and evaluates the defossilisation potential of the MTBE production. In this Chapter, the impacts of deploying a single ACS-based process under so-called brownfield conditions are identified and analysed. Chapter 2 aims first to evaluate and compare the performance of the DD production process and its fossil-based counterpart. Second, to assess the cluster's performance and the impact of deploying the ACS-based process within the boundaries of the existing cluster. For this purpose, two approaches were developed and tested to assess (i) the performance at the process and

cluster levels using TEE indicators; and (ii) the impacts of deploying ACS-based processes at the cluster level.

Chapter 3 presents an assessment of deploying multiple ACS-based processes for DD production in an existing propylene cluster in the PoR. The deployment is considered one at the time (individually) or all at the time (simultaneously), following the first research goal (Table 2). Here, the systematic approach for assessing performance and impacts used in Chapter 2 is utilised and extended to the cluster. Chapter 3 presents and discusses the potential implications of defossilising several DDs at the cluster level, partially addressing the second research goal.

Chapter 4 expands on the previous chapters by assessing the impacts and trade-offs of deploying multiple ACS technologies for DD production within the representative cluster. Here, an in-house superstructure optimisation model is employed to evaluate the potential and impacts of defossilising existing petrochemical clusters using DDs production. The approach presented in Chapters 2 and 3 is used on the large-scale cluster. The investigation is done to illustrate the extent to which an existing chemical cluster can be defossilised by deploying multiple ACS technologies for multiple DDs production.

Chapter 5 continues and extends Chapter 4. Chapter 5 targets the second research goal by presenting an analysis of the cluster's defossilisation potential when deploying ACS processes under various constraints, including feedstock and land availability, as well as the operational flexibility of the units.

Chapter 6 summarises the results presented in Chapters 2-5. Additionally, it highlights and discusses the limitations of this thesis, providing recommendations for future work and for decision-makers.

Table 2. Overview of the thesis chapters and research goals they address.

Chapter	Title	Research Goal	
		1	2
2	Assessing impacts of deploying bio-based isobutene for MTBE production in an existing petrochemical cluster	+	
3	From feedstock to future chemicals: Rethinking carbon sources in industrial propylene clusters	+	+
4	Navigating industrial transition: Understanding trade-offs in defossilising downstream petrochemical production	+	+
5	Effects of operational flexibility, feedstock and land availability on the defossilisation of downstream petrochemical production		+

6. REFERENCES

(1) Van der Net, L.; Staats, N.; Coenen, P. W. H. G.; Rienstra, J. D.; Zijlema, J. D. P. J.; Arets, E. J. M. M.; Baas, K.; van Baren, S. A.; Dröge, R. K.; Geertjes, K.; Honig, E.; van Huet, B.; tte Molder, R. A. B.; Montfoort, J. A.; van der Zee, T. C.; van Zanten, M. C. National Inventory Report 2024 - Greenhouse Gas Emissions in the Netherlands 1990-2022. 2024, pp 1–442.

(2) Ge, M.; Friedrich, J.; Vigna, L. *Global greenhouse emissions by sector and end use, 2021*. World Resources Institute. https://www.wri.org/insights/4-charts-explain-greenhouse-gas-emissions-countries-and-sectors (accessed 2025-12-25).

(3) EC. *Chemicals Strategy for Sustainability towards a Toxic-Free Environment*; Brussels, 2020.

(4) Hadhri Moncef. *Facts & Figures of the European Chemical Industry*. Cefic. https://cefic.org/facts-and-figures-of-the-european-chemical-industry/profile/ (accessed 2025-09-09).

(5) EEA. *Total greenhouse gas emissions in the chemical industry (Indicator)*. Chart (Interactive). https://www.eea.europa.eu/en/european-zero-pollution-dashboards/indicators/total-greenhouse-gas-emissions-in-the-chemical-industry?activeTab=658e2886-cfbf-4c2f-a603-061e1627a515 (accessed 2025-04-08).

(6) VNCI. *Dutch chemical industry*. https://www.vnci.nl/english (accessed 2025-09-09).

(7) Manon Bloemer. *LANDSCAPE OF THE EUROPEAN CHEMICAL INDUSTRY: Netherlands*. Cefic. https://cefic.org/landscape-of-the-industry/netherlands/ (accessed 2025-09-09).

(8) CBS. *Which sectors emit greenhouse gases?* https://www.cbs.nl/en-gb/dossier/greenhouse-gas-emissions/which-sectors-emit-greenhouse-gases- (accessed 2025-09-09).

(9) Government of the Netherlands. *Mitigating climate change*. https://www.government.nl/topics/climate-change/mitigating-climate-change (accessed 2026-03-19).

(10) Saygin, D.; Gielen, D. Zero-Emission Pathway for the Global Chemical and Petrochemical Sector. *Energies* **2021**, *14* (13), 3772. https://doi.org/10.3390/en14133772.

(11) VNCI. Strong Industry for a Strong Netherlands Turning the Tide for the Products of Tomorrow. **2025**, 1–10.

(12) Boulamanti A; Moya JA. *Energy Efficiency and GHG Emissions: Prospective Scenarios for the Chemical and Petrochemical Industry*; Luxemburg, 2017. https://doi.org/10.2760/630308.

(13) IEA. *The Future of Petrochemicals – Analysis*; 2018. https://www.iea.org/reports/the-future-of-petrochemicals.

(14) IEA. Net Zero by 2050: A Roadmap for the Global Energy Sector. *Int. Energy Agency* **2021**, 224.

(15) Ochieng, R.; Gebremedhin, A.; Sarker, S. Integration of Waste to Bioenergy Conversion Systems: A Critical Review. *Energies* **2022**, *15* (7), 2697. https://doi.org/10.3390/en15072697.

(16) Ramirez-Ramirez, C. *Unravelling the impacts of using alternative raw materials in industrial clusters*. NWO. https://doi.org/TTW VI.C.183.010.

(17) Kramer, J.-P.; Kienzler, H.-P.; Schrapers, M.; Nellen, J.; Messemer, F. *Trilateral Strategy for the Chemical Industry*; Düsseldorf, 2017; Vol. no. www.mwide.nrw.de.

(18) Merriam-Webster. *Term: downstream*. Merriam-Webster. https://www.merriam-webster.com/dictionary/downstream (accessed 2022-01-12).

(19) KPMG. Reaction Chemical Magazine: The GCC in 2020. *Chemical Magazine*. 2020, p 28.

(20) Carus, M.; Dammer, L.; Raschka, A.; Skoczinski, P.; Vom Berg, C. *Renewable Carbon – Key to a Sustainable and Future-Oriented Chemical and Plastic Industry*; Hürth, Germany, 2020. www.bio-based.eu/nova-papers.

(21) Avantium. *Portfolio of Technology Platforms and Products*. https://avantium.com/products-technologies.

(22) Corbion. *Bioplastic products*. https://www.corbion.com/products/bioplastic-products.
(23) Covestro. Products. **2025**.
(24) Moncada, J.; Posada, J. A.; Ramírez, A. Early Sustainability Assessment for Potential Configurations of Integrated Biorefineries. Screening of Bio-based Derivatives from Platform Chemicals. *Biofuels, Bioprod. Biorefining* **2015**, *9* (6), 722–748. https://doi.org/10.1002/bbb.1580.
(25) De Jong, E.; Stichnothe, H.; Bell, G.; Jorgensen, H. *Bio-Based Chemicals: A 2020 Update*; 2020.
(26) Hwang, K.-R.; Jeon, W.; Lee, S. Y.; Kim, M.-S.; Park, Y.-K. Sustainable Bioplastics: Recent Progress in the Production of Bio-Building Blocks for the Bio-Based next-Generation Polymer PEF. *Chem. Eng. J.* **2020**, *390* (January), 124636. https://doi.org/10.1016/j.cej.2020.124636.
(27) van den Oever, M.; Molenveld, K.; van der Zee, M.; Bos, H. *Bio-based Plastics 2020*; Wageningen, 2020. https://doi.org/https://doi.org/10.18174/534587.
(28) econic technologies. *Pilot scale demonstration of novel CO2 co-polymerisation catalysts in the PU polyol market*. Deliverable D7.4. https://cordis.europa.eu/article/id/240828-better-plastics-through-cleaner-technology (accessed 2025-06-02).
(29) covestro. *Building with CO_2 technology becomes possible*. https://www.covestro.com/press/building-with-CO2-technology-becomes-possible/ (accessed 2025-06-02).
(30) Posada, J. A.; Patel, A. D.; Roes, A.; Blok, K.; Faaij, A. P. C.; Patel, M. K. Potential of Bioethanol as a Chemical Building Block for Biorefineries: Preliminary Sustainability Assessment of 12 Bioethanol-Based Products. *Bioresour. Technol.* **2013**, *135*, 490–499. https://doi.org/10.1016/j.biortech.2012.09.058.
(31) Ruyssenaars, P. G.; Coenen, P. W. H. G.; Zijlema, P. J.; Arets, E. J. M. M.; Baas, K.; Dröge, R.; Geilenkirchen, G.; Hoen, M. 't; Honig, E.; Huet, B. van; Huis, E. P. van; Koch, W. W. R.; Lagerwerf, L. A.; Molder, R. te; Montfoort, J. A.; Peek, C. J.; Vonk, J.; Zanten, M. C. van. *Greenhouse Gas Emissions in the Netherlands 1990–2017 | National Inventory Report 2019*; Bilthoven, 2019. https://doi.org/10.1016/B0-12-348530-4/00094-1.
(32) Noori, S.; Korevaar, G.; Ramirez, A. R. Institutional Lens upon Industrial Symbiosis Dynamics: The Case of Persian Gulf Mining and Metal Industries Special Economic Zone. *Sustain.* **2020**, *12* (15). https://doi.org/10.3390/su12156192.
(33) Athanassiadis, A.; Christis, M.; Bouillard, P.; Vercalsteren, A.; Crawford, R. H.; Khan, A. Z. Comparing a Territorial-Based and a Consumption-Based Approach to Assess the Local and Global Environmental Performance of Cities. *J. Clean. Prod.* **2018**, *173*, 112–123. https://doi.org/10.1016/j.jclepro.2016.10.068.
(34) Fan, Y.; Qiao, Q.; Chen, W. Unified Network Analysis on the Organization of an Industrial Metabolic System. *Resour. Conserv. Recycl.* **2017**, *125*, 9–16. https://doi.org/10.1016/j.resconrec.2017.05.009.
(35) Titze, M.; Brachert, M.; Kubis, A. Actors and Interactions-Identifying the Role of Industrial Clusters for Regional Production and Knowledge Generation Activities. *Growth Change* **2014**, *45* (2), 163–190. https://doi.org/10.1111/grow.12047.
(36) Ardente, F.; Cellura, M.; Lo Brano, V.; Mistretta, M. Life Cycle Assessment-Driven Selection of Industrial Ecology Strategies. *Integr. Environ. Assess. Manag.* **2010**, *6* (1), 52–60. https://doi.org/10.1897/IEAM_2008-065.1.
(37) Daddi, T.; Nucci, B.; Iraldo, F. Using Life Cycle Assessment (LCA) to Measure the Environmental Benefits of Industrial Symbiosis in an Industrial Cluster of SMEs. *J. Clean. Prod.* **2017**, *147*, 157–164. https://doi.org/10.1016/j.jclepro.2017.01.090.
(38) Chen, X.; Dong, M.; Zhang, L.; Luan, X.; Cui, X.; Cui, Z. Comprehensive Evaluation of Environmental and Economic Benefits of Industrial Symbiosis in Industrial Parks. *J. Clean. Prod.* **2022**, *354* (March), 131635. https://doi.org/10.1016/j.jclepro.2022.131635.

(39) Fraccascia, L.; Giannoccaro, I. What, Where, and How Measuring Industrial Symbiosis: A Reasoned Taxonomy of Relevant Indicators. *Resour. Conserv. Recycl.* **2020**, *157* (February), 104799. https://doi.org/10.1016/j.resconrec.2020.104799.

(40) Neves, A.; Godina, R.; Azevedo, S. G.; Matias, J. C. O. A Comprehensive Review of Industrial Symbiosis. *J. Clean. Prod.* **2020**, *247*. https://doi.org/10.1016/j.jclepro.2019.119113.

(41) Valenzuela-Venegas, G.; Vera-Hofmann, G.; Díaz-Alvarado, F. A. Design of Sustainable and Resilient Eco-Industrial Parks: Planning the Flows Integration Network through Multi-Objective Optimization. *J. Clean. Prod.* **2020**, *243*, 118610. https://doi.org/10.1016/j.jclepro.2019.118610.

(42) Jog, S.; Medrano-García, J. D.; Vázquez, D.; Guillén-Gosálbez, G. Multi-Objective Optimization of a Hybrid Fossil/Renewable Carbon Methanol Cluster. *ACS Sustain. Chem. Eng.* **2025**, *13* (4), 1473–1483. https://doi.org/10.1021/acssuschemeng.4c06566.

(43) Afshari, H.; Farel, R.; Peng, Q. Challenges of Value Creation in Eco-Industrial Parks (EIPs): A Stakeholder Perspective for Optimizing Energy Exchanges. *Resour. Conserv. Recycl.* **2018**, *139* (February), 315–325. https://doi.org/10.1016/j.resconrec.2018.09.002.

(44) Griffiths, S.; Sovacool, B. K.; Kim, J.; Bazilian, M.; Uratani, J. M. Decarbonizing the Oil Refining Industry: A Systematic Review of Sociotechnical Systems, Technological Innovations, and Policy Options. *Energy Res. Soc. Sci.* **2022**, *89* (January), 102542. https://doi.org/10.1016/j.erss.2022.102542.

(45) Luo, J.; Pérez-Fortes, M.; Ibarra-Gonzalez, P.; Straathof, A. J. J.; Ramirez, A. Impact of Intermittent Electricity Supply on a Conceptual Process Design for Microbial Conversion of CO2 into Hexanoic Acid. *Chem. Eng. Res. Des.* **2024**, *205*, 364–375. https://doi.org/10.1016/j.cherd.2024.04.005.

(46) Hennig, C.; Brosowski, A.; Majer, S. Sustainable Feedstock Potential – a Limitation for the Bio-Based Economy? *J. Clean. Prod.* **2016**, *123*, 200–202. https://doi.org/10.1016/j.jclepro.2015.06.130.

(47) Carus, M.; Porc, O.; vom Berg, C.; Kempen, M.; Schier, F.; Tandetzki, J. *Is There Enough Biomass to Defossilise the Chemicals and Derived Materials Sector by 2050?*; Hürth, Germany, 2025. www.renewable-carbon-initiative.com.

(48) Government of the Netherlands. *Rotterdam Mainport development*. https://www.government.nl/topics/maritime-transport-and-seaports/development-of-rotterdam-hub-port#:~:text=The port of Rotterdam makes,parks along the Meuse river. (accessed 2025-06-18).

(49) Witte, P.; Wiegmans, B.; Louw, E. More Claims than Land: Multi-Facetted Land Use Challenges in the Port-City Interface. *J. Transp. Geogr.* **2025**, *124*, 104181. https://doi.org/10.1016/j.jtrangeo.2025.104181.

(50) EGC. *Industrial Symbiosis*; 2018. https://ec.europa.eu/environment/europeangreencapital/wp-content/uploads/2018/05/Industrial_Symbiosis.pdf.

(51) Tan, M.; Ibarra-González, P.; Nikolic, I.; Ramírez Ramírez, A. Understanding the Level of Integration in Existing Chemical Clusters: Case Study in the Port of Rotterdam. *Circ. Econ. Sustain.* **2024**, No. submitted for review. https://doi.org/10.1007/s43615-024-00410-5.

(52) Stepchuk, I.; Pérez-Fortes, M.; Ramírez, A. R. Impacts of Defossilising Downstream Derivatives in Petrochemical Clusters – MTBE Case Study. In *Computer Aided Chemical Engineering*; 2023; Vol. 52, pp 2429–2434. https://doi.org/10.1016/B978-0-443-15274-0.50386-3.

(53) Tan, M.; Nikolic, I.; Ramírez, A. R. Superstructure-Based Optimization Framework to Assess Defossilization Pathways in Petrochemical Clusters. *Chem. Eng. Sci.* **2026**, *321*, 122783. https://doi.org/10.1016/j.ces.2025.122783.



CHAPTER 2

Assessing impacts of deploying bio-based isobutene for MTBE production in an existing petrochemical cluster

THIS CHAPTER WAS ORIGINALLY PUBLISHED AS STEPCHUK, I., PÉREZ-FORTES, M., & RAMÍREZ, A. (2025). ASSESSING IMPACTS OF DEPLOYING BIO-BASED ISOBUTENE FOR MTBE PRODUCTION IN AN EXISTING PETROCHEMICAL CLUSTER. JOURNAL OF CLEANER PRODUCTION, 503, 145114. HTTPS://DOI.ORG/10.1016/J.JCLEPRO.2025.145114

ABSTRACT:

Alternative carbon sources (ACS) are increasingly considered necessary for the defossilisation of fossil-based chemicals. However, the potential and impacts of integrating ACS-based processes in existing petrochemical clusters are often overlooked. This chapter aims to systematically analyse key techno-economic and environmental indicators associated with producing bio-based isobutene as an option to defossilise the production of methyl tert-butyl-ether (MTBE) in the Port of Rotterdam, the Netherlands. The assessment is conducted at process and cluster levels. For this, the bio-isobutene (bio-IBN) process (358 kt/y of product), along with the existing fossil-based processes involved in MTBE production (i.e. the MTBE cluster), were modelled in Aspen Plus v12. The results show that under current conditions, although bio-IBN production could defossilise the MTBE cluster by c.a. 80%, it is not cost-competitive compared to the current fossil-based process. Furthermore, deploying the bio-IBN process would significantly change the structure of the existing MTBE cluster, increasing by a factor of two or larger electricity, cooling water and bare land requirements. These requirements would affect the economic and environmental performance of the full cluster. The results emphasise the critical role of strategic change of new processes within existing petrochemical clusters.

ABBREVIATIONS:

ACS	Alternative carbon sources
APEA	Aspen process economic analyser
Bio-IBN	Bio-Isobutene
CAPEX	Capital expenditures
CBBs	Chemical building blocks
CHP	Combined heat and power
CO_2	Carbon dioxide
CW	Cooling water
HGU	Heat generation unit
HPs	Heat pumps
HPS	High-pressure steam
LLPS	Very low-pressure steam
LPS	Low-pressure steam
MEUR	Million EUR
MPS	Medium-pressure steam
MSP	Minimum selling price
MTBE	Methyl tert-butyl ether
OPEX	Operational expenditures
PJ	Peta joules
PO	Propylene oxide
PoR	Port of Rotterdam
SI	Supplementary information
TBA	Tert-butyl alcohol
TEE	Techno-economic and environmental
TJ	Tera joules
TRL	Technology readiness level
TWC	Total water consumption
VC-HP	Vapour compression heat pump

1. INTRODUCTION

Methyl tert-butyl ether (MTBE) is a commonly used downstream derivative produced in the chemical industry. It has several applications, including its use as a fuel oxygenate in the automotive industry and as a solvent for medical and laboratory applications in the pharmaceutical industry [1]. Its production worldwide exceeds 35 million metric tonnes, with an expected growth of 6% by 2028 [2], despite its prohibited use in various countries [3]. In Europe, the MTBE industry has faced the elimination of MTBE imports from Russia, which likely means that Europe will keep its production in the short and medium term. Furthermore, the use of bio-MTBE currently counts towards biofuel mandates in most European countries [4]. In 2018, the total MTBE production in the Port of Rotterdam (PoR), the Netherlands, reached 0.86 million metric tonnes, accounting for nearly 43% of European MTBE production [1]. In this site, propylene oxide (PO) and tert-butyl alcohol (TBA) are also produced, which are the precursors of MTBE [5].

Conventionally, MTBE is produced from fossil-based sources in two pathways: (i) blending isobutene and methanol over a catalyst bed or (ii) dehydrating TBA in the presence of methanol [1] (i.e., the route used in the PoR [6]. To defossilise the current production of MTBE, it is required to change the origin of the carbon entering the process by employing alternative carbon sources (ACS), such as biomass, waste, and carbon dioxide, and this can be done by defossilising methanol and or isobutene. Existing research has focused on using ACS to produce chemical building blocks (CBBs) (e.g., bio-methanol, bio-ethanol, syngas), which then can be used as the basis for defossilising MTBE production (see Figure 1). However, to the authors' knowledge, no direct routes from ACS are reported in the literature for MTBE production.

The most common ACS-based pathway found in literature is the use of bio-methanol to produce ACS-based MTBE [7]. However, this pathway still requires the use of fossil-based isobutene, which represents about 80% of the total carbon feedstock present in MTBE. Therefore, the complete defossilisation of MTBE would require all feedstocks containing non-fossil carbon, including isobutene. In recent years, isobutene production from ACS has shown a growing interest among companies, as illustrated by the demonstration projects launched by Global Bioenergies (fermentation of sugars into isobutene [8]) and Optisochem (hydrolysate fermentation into isobutene [9]). Moreover, ongoing research for other emerging ACS-based routes can also be found in the literature (e.g., mevalonate pathway or Aldol condensation coupled with dehydration, as shown in Figure 1). According to [10] and [11], one of the most common ACS-based pathways to produce isobutene is the dehydration of isobutanol produced through enzymatic hydrolysis and sugar fermentation. Thus, this work employs the following route to explore its potential and performance to defossilise the existing MTBE production.

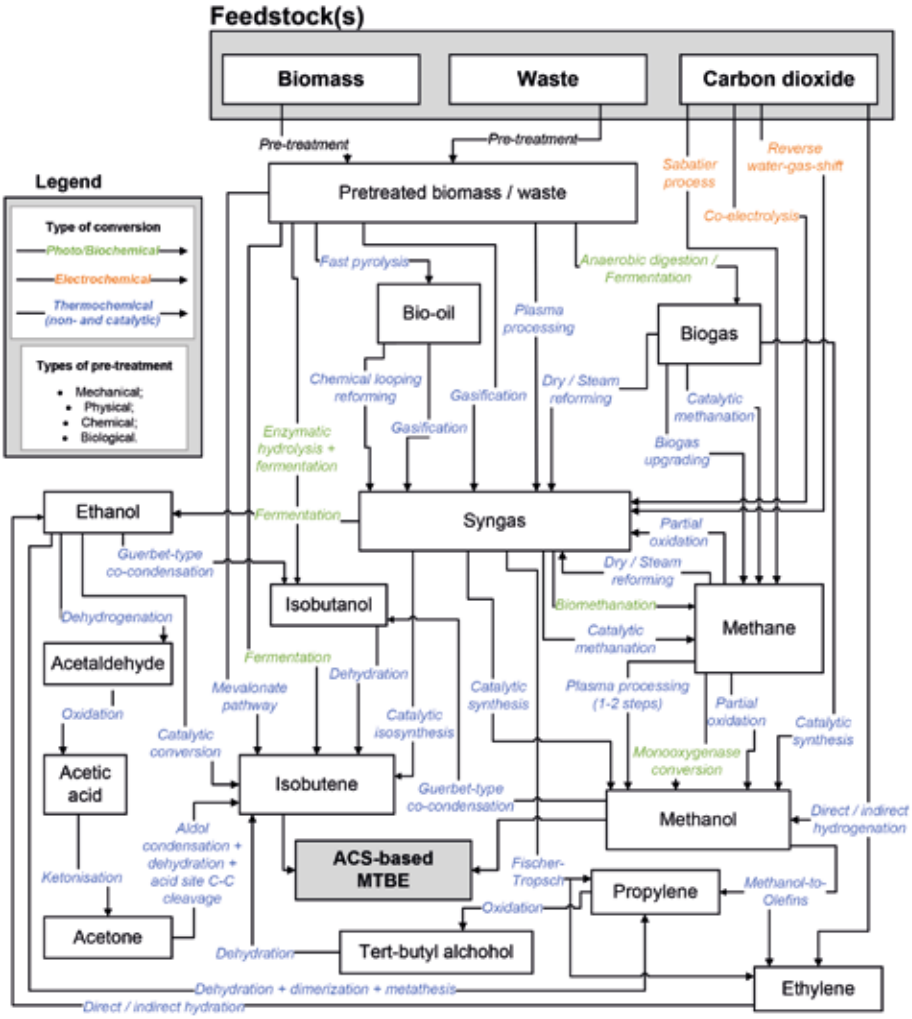

Figure 1. Overview of ACS-based MTBE production pathways. The conversion categories are indicated in green, orange and blue. A list of carbon sources and processes can be found in Appendix B.

To produce isobutene from sugars, a pre-treatment stage is required to break biomass into cellulose, hemicellulose and lignin [12]. The majority of the research focuses on steam explosion [13], dilute-acid [14] and organosolv pre-treatment [15]. Organosolv (i.e., TRL 7) has found a growing interest among biorefineries, despite its drawbacks (i.e., energy intensity and costs), as the process extracts high-quality streams, allowing to reutilise them in the production of other downstream chemicals (e.g., ethanol, furfural, hydroxymethylfurfural) [16]. After the pre-treatment, the extracted sugars are fermented into highly dilute isobutanol, which must be further separated from water to be converted into isobutene. Purifying dilute isobutanol is still a complex and costly downstream separation process [17]. Despite that, the fermentation process is employed by the producers in the US (i.e., Gevo Inc. and Buta-

max Advanced Biofuels LCC) and Europe (i.e., Abengoa, Eastman Chemical Company [18]). Among a variety of downstream separation technologies present in the literature (e.g., gas stripping and vacuum evaporation, supercritical extraction, membrane extraction, etc. [19]), it is reported that the dehydration of isobutanol to isobutene is a promising and relatively well-established process (i.e., TRL 6-7) [20].

Ex-ante technology assessments are often used to compare the potential performance of novel ACS-based routes with their fossil-based counterparts. Most of them focus on comparing the techno-economic and environmental (TEE) performances of stand-alone ACS-based and fossil-based processes [21] based on the information obtained from process modelling [22]. In most cases, they assess processes for CBBs production while overlooking or underestimating the downstream process requirements [23]. This is one of the visible drawbacks, as, in the case of the MTBE, ACS-based routes involve the production of new intermediate chemicals (e.g., isobutanol), thereby avoiding or decreasing the use of current CBBs [24]. Thus, ex-ante assessments are required to be adapted and tested for evaluation of ACS-based DD production. Another drawback of these assessments is that they lack evaluation of the impacts beyond the boundaries of the process, thereby neglecting the fact that the vast majority of the chemicals produced today are interconnected in (already existing) clusters through energy, mass and/or waste flows [25]. Such interactions, while allowing current industrial clusters to increase energy and material efficiencies, also make individual processes harder to defossilise [26], as any change in processes could cause direct or indirect impacts on the cluster level [27]. However, to the authors' knowledge, these aspects remain highly unexplored in literature. There is a strong need to obtain more realistic insights into the performance and impacts of ACS-based technologies after the deployment; it is important to identify and evaluate such (positive or negative) impacts.

This chapter aims to identify and analyse the impacts of deploying a bio-IBN production process for the defossilisation of MTBE production in an existing cluster. To achieve this, the goal is split into two sub-goals to assess the impacts at two levels. First, to assess and compare the techno-economic and environmental performance of the bio-IBN process and its fossil-based counterpart. Second, to evaluate its performance and impact on MTBE production (i.e., the MTBE cluster) after its deployment, using the Port of Rotterdam as a case study. The originality of this research is rooted in assessing impacts at the cluster level of changing production processes already embedded in existing petrochemical clusters and are highly symbiotic in mass and energy flows. Compared to other works where green fields are assumed, this research includes the real constraints of brown industrial fields. In addition, the study focuses on DD production, which, compared to the production of CBBs, is generally overlooked as an option for defossilisation.

2. MATERIALS AND METHODS

The methodological approach followed in this chapter consisted of four main steps: (i) scope definition and system boundaries; (ii) model development; (iii) assessment of the performance of the bio-IBN and fossil-based isobutene production processes; and (iv) assessment of the impacts associated with the introduction of the bio-IBN production process within an existing MTBE cluster.

2.1 Scope definition and system boundaries

The study focused on the production of isobutene from an ACS-based feedstock (i.e., biomass) as a part of the MTBE cluster. The research uses, as a point of departure, the production of MTBE in an in-house model, which was developed based on the existing industrial cluster of the Port of Rotterdam, the Netherlands. The model contains 52 processes modelled in Aspen Plus v12 and mimics existing interconnections in mass and energy inside the petrochemical cluster (for further information on the in-house model, see [28]).

In the current study, two system boundaries were differentiated: process and cluster (see Figure 2). The process boundary that included the stand-alone production process of isobutene (i.e., (i) fossil-based IBN process in dark grey, Figure 2a; and (ii) bio-IBN process in Figure 2b) was used in the assessment and comparison of the TEE performance of the production processes (see Section 3.1). The cluster boundary (i.e., the MTBE cluster, Figure 2) considered all upstream and downstream processes involved in the MTBE production and was used to assess the performance and structural changes associated with integrating the bio-IBN process into the existing MTBE cluster (see Section 3.2). It is important to note that the processes (white boxes in Figure 2a) are parts of different companies in the cluster.

The current production capacity of fossil-based isobutene in the PoR is 358 kt/y at 99% wt in purity, of which 261 kt/y is used to synthesise 400 kt/y of MTBE, while the remaining 97 kt/y are assumed to be sold to the market (i.e., it is not used as an intermediate in any other process in the cluster). The same production capacity was adopted for modelling the ACS-based process. For both models (fossil and ACS), the required material inputs (e.g., feedstocks and auxiliary chemicals) were bought from the market. Mimicking the existing situation in the PoR, utilities (e.g., steam, electricity) were first generated within the production process(es) and reused wherever possible in the process and/or the cluster. If additional utilities were required, they were assumed to be bought from (or sold in) the market. Flue gasses from internal heat generation processes were cleaned prior to their release into the atmosphere. Furthermore, although heat integration of the full process was outside the scope of the current study, the pinch point analysis was used (based on Aspen Energy Analyzer – AEA) to identify the most significant heat exchanges and minimise external utility needs. Hazardous and waste liquid streams were assumed to be sent to treatment facilities, which were considered outside of the system boundaries of the study and thus only included as operating costs. By-products were directly sent to the next production facility (if possible) or sold to the market (i.e., no storage facilities were included).

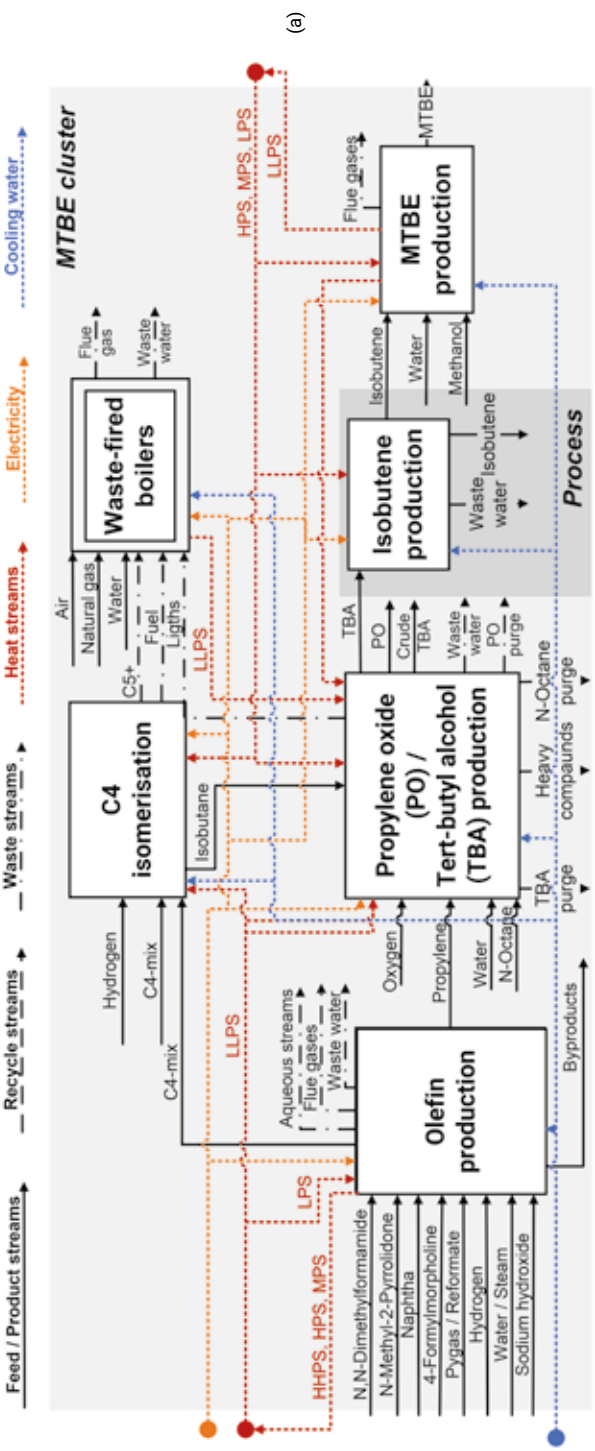

Figure 2. Block diagrams: (a) MTBE production in the current fossil-based cluster. LLPS – very low-pressure steam; LPS – low-pressure steam; MPS – medium-pressure steam; HPS – high-pressure steam.

(b)

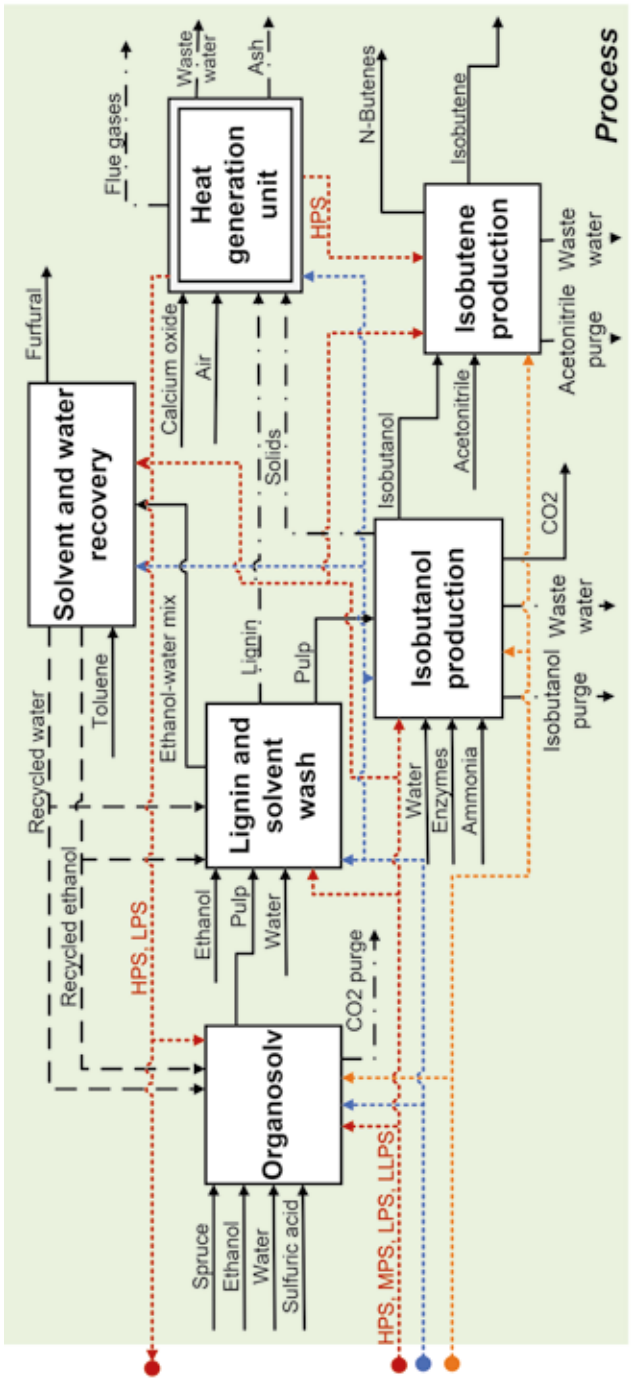

Figure 2. Block diagrams: (b) ACS-based isobutene production process. (Continued).

2.2 Model development

2.2.1 Process modelling

Figure 2 depicts the main processes in the fossil-based MTBE cluster and bio-IBN production. The processes (fossil- and ACS-based) were assumed to operate 8,000 hours/y, for further details (i.e., data collection, modelling assumption) refer to Appendix A, Tables A.1 and A.2. A detailed description of the fossil- and bio-IBN production processes, together with their process flow diagrams (PFDs), can be found in the Appendix A, Tables A.1 and A.2.

For the bio-IBN model, the biomass composition and the process description to convert biomass into isobutanol were taken from [29] and [10]. Missing properties (i.e., enthalpy of formation, molar mass of the components) for biomass components (i.e., sugars, xylose) were retrieved from the National Institute of Standards and Technology (NIST). Additionally, for non-conventional components (i.e., cellulose), properties modules (i.e., INHSPCD) were imported into Aspen Plus v12 [30]. Multiple property methods were used in both simulations (for further information, see supplementary material). The selection of property methods followed the methodology proposed in [31].

2.2.2 Modelling assumptions and validation

The fossil- and ACS-based processes were modelled using similar approaches for the reaction, separation, and recovery sections. The reaction sections were modelled using RStoic reactors based on chemical kinetics. The separation and recovery sections were modelled using (i) RadFrac columns for liquid separation (i.e., defined based on shortcut distillation model DSTWU and/or literature data), (ii) filters and centrifuges, CFuge, for solids, and (iii) flashes and decanters for easily-separable mixtures (i.e., different phases and/or densities), respectively. Pumps, compressors (i.e., Compr or MCompr), and valves were used for pressure changes. Heaters and HeatEX were used for heating and cooling. For the bio-IBN process model, when data was unavailable, an ideal separation was modelled using a Sep model. This was, however, the case in less than 5% of the total equipment modelled. The characteristics (i.e., pressure, temperature, vapour fraction) of the utility streams (i.e., steam, cooling, chilling) are shown in Appendix A, Table A.3.

For model validation, when possible, the model results were compared to data from open sources, see Appendix A, Tables A.1 and A.2. Due to the lack of data for the whole bio-IBN production process, the validation was done only for the individual process units for isobutene production (i.e., organosolv process, isobutanol production, isobutene production). In the case of the fossil-based process, results were validated by comparing them with the data from the existing processes in terms of mass and energy consumption per amount of product.

The downstream separation units of the bio-IBN process were modelled using fractional distillation (i.e., based on their different boiling temperatures). For distillation units (ethanol-water), a vapour compression heat pump (VC-HP) [32] was proposed to improve the

heating and cooling requirements of the units (see Appendix B). For this, additional capital expenditures (CAPEX) associated with installing the VC-HP units were based on [33] and [34].

2.3 Performance assessment of the ACS- and fossil-based isobutene production processes

2.3.1 Techno-economic and environmental assessments and comparison

The performances of the fossil- and bio-IBN processes were assessed using the TEE indicators described in Table 1, based on the data retrieved from the models. For assessing the economic performance, bare equipment costs were taken from the Aspen Plus economic analyser, and raw material prices were obtained from the literature. Market prices of materials and utilities (see Appendix B) were gathered for various years and were harmonised to the same currency and year (EUR and 2018) using the Producer Price Index for the Chemical industry (CPI index) [35]. The year 2018 was chosen to avoid fluctuations in market prices induced by the COVID-19 lockdowns. When needed, economic allocation was applied based on the price of the products, by-products or utilities [36]. For the analysis, a payback period of 12 years, plant lifetime of 25 years, interest rate of 8% and a tax rate of 25% were assumed.

The environmental performance was evaluated by assessing the water consumption, bare land requirements, and CO_2 emissions at Scope 1 (process) and Scope 2 (energy-related CO_2 emissions). For Scope 2, emission rates (see Appendix A, Table A.4) were estimated using economic allocation based on the retrieved data (i.e., stream compositions) from the Aspen Plus models of the utility units (i.e., natural gas and waste-fired boilers and combined heat and power plants (CHPs)) in the in-house model (for further information see [28]). For estimating water consumption, it was assumed that the water was disposed of after waste treatment. Within the boundaries considered, biomass was assumed to be CO_2-neutral, and emissions from transporting the biomass were not considered.

2.3.2 Sensitivity analysis

A sensitivity analysis was conducted to explore the potential impacts of fluctuations in biomass, electricity, and steam prices on the minimum selling price (MSP) and OPEX of bio-isobutene. The range of variation of the prices was assumed to be ± 75% above and below the market price (year 2018).

2.4 Impact assessment on the current structure of the cluster

To identify potential impacts at the cluster level, a graphical network representation of the process units (i.e., blocks) and the connections between them (i.e., mass and energy flows in the form of links) was developed for the two cases, fossil-based and with the ACS-based isobutene. Then, to identify the main changes, both networks were compared. The changes in the flows were categorised as (i) removed (i.e., 100%), (ii) affected (i.e., the flow is reduced/increased), (iii) unchanged, or (iv) added (i.e., 100% new flow). In the second step, the impact of the structural changes was evaluated using the TEE indicators shown in Table 1 (see Section 3.2).

Table 1. List of the techno-economic and environmental indicators used for performance assessment. Applicable to process and cluster levels.

	Indicator	Definition	Formula	**Data inputs**	**Ref.**
Techno-economic	Carbon feedstock	The total mass of carbon in material flows of feedstocks.	$C_f = \sum_{i=1}^{n} m_i^{in} \cdot C_{wt\%_i}$	· m_i^{in} – mass of material entering the production process, kt/y; · $C_{wt\%_i}$ weight percent of the carbon in the chemical, wt%.	37
	Net energy/power	The sum of energy flows of utilities used and generated in the process.	$TEC = \sum_{i=1}^{n} E_i^{in} + \sum_{i=1}^{n} E_i^{out}$	· E_i^{in} – energy/power used in the production process, TJ/y; · E_i^{out} – energy/power excess in the production process, TJ/y.	38
	Capital expenditures	The sum of investments required.	$CAPEX = ISBL + OSBL + ECC + +CC + WC$	· *ISBL* – inside battery limits (bare equipment costs), MEUR; · *OSBL* – offsite battery limits, includes the costs of the additions (f.e. the site infrastructure); ~(0.3-0.4)**ISBL*, MEUR; · *ECC* – engineering and constructions costs; ~(0.25-0.3)**ISBL*,MEUR; · *CC* – contingency chargers ~0.1**ISBL*, MEUR; · *WC* – working capital ~0.15**ISBL*, MEUR.	39
	Operational expenditures	The sum of the annual operating expenses.	$OPEX = VCOP + DCOP + OCOP$	· *VCOP* – variable costs of production, MEUR/y; · *DCOP* – direct costs of production, MEUR/y; · *OCOP* – other costs of production, MEUR/y.	39
	Equivalent annual operating costs	The combined CAPEX and OPEX presented in a single cash annual equivalent amount.	$EAOC = OPEX + \frac{CAPEX \cdot i \cdot (1+i)^{sl}}{(1+i)^{sl} - 1}$	· *sl* – total number of years of service life, assumed 25 years; · *CAPEX* – capital expenditures, MEUR; · *OPEX* – operational expenditures, MEUR/y; · *i* – interest rate, assumed 8%.	40
	Minimum selling price	The sale price of a product determined at the break-even point.	$MSP = Revenue / m_{prod}$	· *Revenue* – the income generated from all sales of goods, MEUR/y.	-

Table 1. List of the techno-economic and environmental indicators used for performance assessment. (Continued)

	Indicator	Definition	Formula	Data inputs	Ref.
Environmental	Total water consumption	The amount of water permanently removed from the water source, including water losses due to utility usage.	$TWC = \sum_{i=1}^{n} m_{w_i}^{in} + \sum_{i=1}^{n} k_{steam} \cdot m_i^{steam} + \sum_{i=1}^{n} k_{CW} \cdot m_i^{CW} - \sum_{i=1}^{n} m_i^{ww}$	· m_{wi}^{in} – mass of process water entering the production process, kt/y; · k_{steam} – coefficient for steam loss, assumed 25%; · m_i^{steam} – mass steam used in the production process, kt/y; · k_{CW} – coefficient for cooling water loss, assumed 2%; · m_i^{CW} – mass steam used in the production process, kt/y; · m_i^{ww} – mass of waste water exiting the production process, kt/y.	41,42
	Total bare land requirement	The sum of land footprint occupied by the total equipment.	$TL = \sum_{k=1}^{n} A_k$	· $k = (1 \dots n)$ – number of equipment used in the production; · A_k – bare equipment area, m^2.	-
	Scope 1: Process-related CO_2 emissions	The sum of direct emissions associated with a production process.	$CO_2^{scope1} = \sum_{j=1}^{n} CO_{2j}^{out}$	· $j = (1 \dots n)$ – number of gaseous waste streams exiting production; · $CO_{2\,j}^{out}$ – emissions associated with the waste stream, kt CO_2-eq/y.	-
	Scope 2: Energy-related CO_2 emissions	The sum of indirect emissions associated with the utilities required for the production process.	$CO_2^{scope2} = \sum_{u=1}^{n} CO_{2u}^{out}$	· $u = (1 \dots n)$ – number of utility flows entering the production; · $CO_{2\,j}^{out}$ – emissions produced from utilities used, kt CO_2-eq/y.	-
	Total CO_2 emissions	Total emissions from the production process: Scope 1 and 2.	$CO_2^{total} = CO_2^{scope1} + CO_2^{scope2}$	· CO_2^{scope1} – emissions (Scope 1), kt CO_2-eq/y; · CO_2^{scope2} – emissions (Scope 2), kt CO_2-eq/y.	-

3. RESULTS AND DISCUSSION

3.1 Performance assessment of ACS- vs fossil-based isobutene processes

3.1.1 Comparison of mass and energy balances

The mass balances and net energy requirements of the fossil- and bio-IBN processes are presented in Figure 3 and Table 2. The models are validated by comparing ratios of auxiliary chemicals used (e.g., solvents) to the amount of biomass consumed in data reported in the literature (see Appendix A, Tables A.1 and A.2). As shown in Figure 3, a key difference between the fossil- and bio-IBN processes is the change in the use and production of chemicals. The fossil-based process produces only isobutene, while the ACS-based process has CO_2, n-Butenes and furfural as by-products.

The findings also show that using the bio-based route would significantly increase heat and cooling requirements (see ACS-based case under Table 2). However, part of the heat needs in the bio-based process is covered by an internal heat generation unit (HGU) (the unit burns bio-waste streams from the bio-isobutene production), while in the case of the fossil-based process, all utilities are bought from the market. The heat generated by HGU from bio-IBN covered 25% of the medium-pressure steam (MPS) required in the bio-IBN process (i.e., it fully covers both the organosolv and isobutene production stages), but only 14% of the total process needs of very low-pressure steam (LLPS). The major contributors to the energy requirements from the bio-IBN process are the columns from the recovery and distillation units of ethanol-water separation, accounting for up to 87% of the total energy needs of the process. This is mainly due to the need to separate highly diluted products formed after the organosolv reactor [43] (43%(wt.) water and 41%(wt.) ethanol (solvent), see Appendix B). All columns operate at low temperatures of 78-98°C (note that the boiling point of ethanol at 1 bar is 78.4°C, of water is 100°C, and of the azeotrope is 78.3°C), which results in considerable LLPS and cooling water. Using a VC-HP could reduce up to 91% (128 PJ/y) and 29% of the total LLPS and cooling water consumption, respectively (see ACS-based case with VC-HP in Table 2), but required almost 27 PJ/y of more electricity. The CAPEX of the ACS-based case using a VC-HP is 2 times higher compared to the case without heat pumps, while the OPEX is reduced by 62%. The share of the annualised CAPEX of the VC-HP is 188 MEUR/y, while annual savings due to the reduction in OPEX are in the order of 2,200 MEUR.

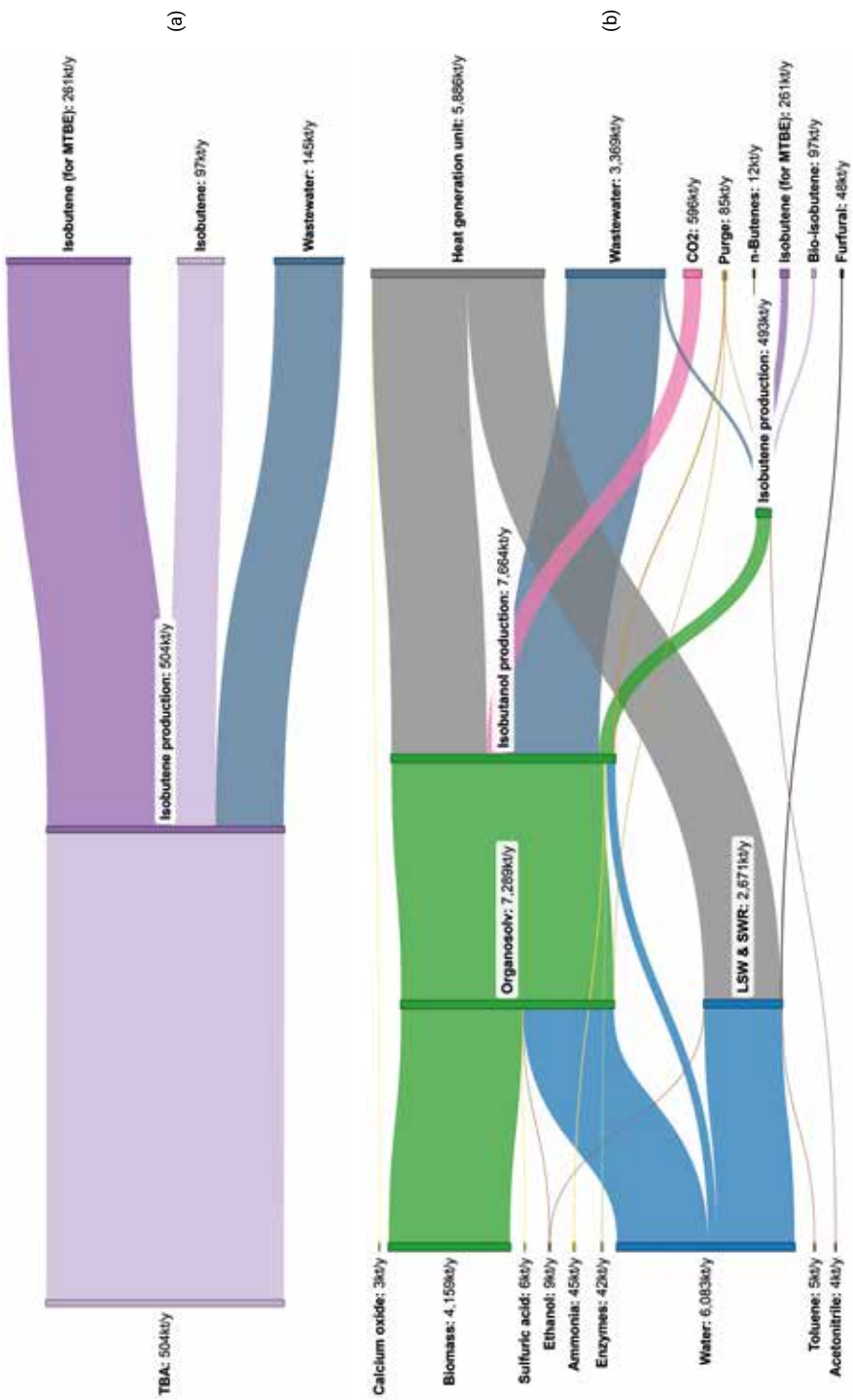

Figure 3. Mass flows of (a) fossil-and (b) bio-IBN isobutene production processes. LSW & SWR - lignin and solvent wash unit and solvent and water recovery unit.

Table 2. Net energy requirements, cooling needs and economic performances of fossil- and ACS-based isobutene production processes. LLPS – very low-pressure steam; LPS – low-pressure steam; MPS – medium-pressure steam; HPS – high-pressure steam.

		Fossil-based case	ACS-based case	ACS-based case with VC-HP
LLPS	PJ/y	-	120	-7.8
LPS	PJ/y	-	-1.6	-1.6
MPS	PJ/y	0.6	5.4	5.4
HPS	PJ/y	-	-1	-1
Cooling water	PJ/y	0.5	160	120
Electricity	PJ/y	0.04	0.3	29
CAPEX	MEUR	16	1,171	2,430
OPEX	MEUR/y	665	3,568	1,366

A negative value represents the extra production of the power/energy.

In comparison, the bio-IBN process using VC-HP has an excess of high-pressure steam (HPS), LPS and LLPS, while all three are neither produced nor required in the fossil-based process. However, the ACS case results in a significant increase in MPS (9 times) and cooling water consumption (240 times), followed by the additional electricity required for the compressor work of the HPs. The differences in energy profiles between the two processes emphasise the importance of evaluating the potential of heat and mass integration of new processes into existing clusters.

3.1.2 Techno-economic performance assessment

Table 3 provides an overview of the TEE indicators for both cases, which are discussed in the following sections. As the bio-IBN case produces several by-products, the values of the indicators for the case are presented both as absolute and allocated to the 358 kt/y of isobutene produced.

The results show a significant decrease in fossil feedstocks in the process as a consequence of implementing the ACS-based route, from 504 kt/y to 18 kt/y (see Figure 3). In the fossil process, 100% of the carbon entering the process comes from the TBA stream. In the bio-IBN, 1,966 kt/y of carbon comes from biomass, accounting for 99% of the total carbon entering the process (see Table 3), from which 10% of carbon is embedded in the byproducts and 74% in the waste streams. The results show that the higher complexity of the ACS-based process compared to the relatively simple fossil-based process results in significantly higher bare equipment costs and, thus, higher CAPEX (see Table 3). The high bare equipment costs of the bio-IBN process are primarily due to the higher number of equipment used. The bio-IBN process requires 4Mt/y of biomass, yet the market price of the latter one is 13 times lower than the TBA price, resulting in 2 times lower raw materials costs compared to the fossil-based process. Still, the OPEX of the bio-based case is significantly higher than the fossil-based one (2 times) due to higher cooling water and electricity requirements. As a result, the annual operating cost of the ACS-based process is 2 times higher than that of the fossil-based one.

Table 3. Techno-economic and environmental indicators for the performance assessment (based on the Table 1).

			Fossil-based case	ACS-based case	
Indicator	**Abbr**	**Units**	**Absolute**	**Absolute**	**Allocated**
Carbon feedstock	C_f	kt/y	318	1,977	1,226
Total steam consumption	TEC_{steam}	PJ/y	0.6	-5	-3.1
Total cooling water consumption	TEC_{CW}	PJ/y	0.5	120	74
Total electricity consumption	$TEC_{electricity}$	PJ/y	0.04	29	18
Capital expenditures	CAPEX	MEUR	16	2,430	1,507
Operational expenditures	OPEX	MEUR/y	665	1,366	847
Equivalent annual operating costs	EAOC	MEUR/y	667	1,593	988
Minimum selling price	MSP	EUR/tonne	1,503	3,776	-
Environmental					
Total water consumption	TWC	kt/y	97	39,441	24,453
Total bare land requirement*	TL	m^2	46	4,145	2,570
Total CO_2 emissions	CO_2^{total}	kt $CO_{2\text{-eq/y}}$	122	8,424**	5,223

*The indicator only looks at equipment footprint and does not account for any land use outside the system boundaries.
**42% are from biogenic origin (see Section 3.1.3, Table 4).

The higher CAPEX and OPEX results on the MSP of the bio-IBN being 2.5 times higher than the fossil case and 2.3 times higher than the market price. Note that in this assessment, it was assumed that the LLPS, LPS and HPS that are not used in the process (i.e., excess) are sold to the market, and as a result, 25% of the revenue of the bio-IBN is from selling steam. If this is not possible, the MSP of the ACS case would be 2.7 times higher than the market price.

3.1.3 Environmental performance

Table 4 summarises the CO_2 emissions from both production processes. The results show that the fossil-based process has no Scope 1 emissions as the process does not generate any waste streams. In the bio-IBN case, biomass residues (i.e., lignin, pulp and solid fractions) are used for in-situ steam production, and therefore, all Scope 1 emissions of the ACS-based case are of biogenic origin. However, when Scope 2 emissions are considered, the picture changes as the bio-based case also requires a high amount of additional electricity and heat from the market (see Section 3.1.1). In this chapter, it was assumed that the market uses natural gas as feedstock to produce utilities (reflecting the current situation), and Scope 2 emissions of the ACS case are c.a. 40 times higher than those of the fossil base case. If renewable sources were used instead, the impacts could be significantly lower. This highlights the importance of decarbonising heat and electricity when implementing ACS-based processes.

Table 4. Total CO_2 emissions of fossil- and ACS-based isobutene production processes (i.e., Scope 1 and Scope 2, based on the Table 1). WFB – waste-fired boilers; CHP – combined heat and power plants; HGU –heat generation unit.

	Fossil-based case		**ACS-based case**	
	Scope 1: Process-related CO_2 emissions			
	CO_2, kt/y	**Origin**	**CO_2, kt/y**	**Origin**
From the production process	-	-	28	biogenic
From internal HGU/CHP/WFB	-	-	3,534	biogenic
Sub-total CO_2 emissions	-	-	**3,562**	biogenic
	Scope 2: Energy-related CO_2 emissions			
	CO_2, kt/y	**Origin**	**CO_2, kt/y**	**Origin**
LLPS	-	-	-	-
LPS	-	-	-	-
MPS	117	non-biogenic	1,029	non-biogenic
HPS	-	-	-	-
Electricity	5	non-biogenic	3,833	non-biogenic
Sub-total CO_2 emissions	**122**	non-biogenic	**4,862**	non-biogenic
Total CO_2 emissions	**122**	non-biogenic	**4,862**	non-biogenic

The ACS-based case has considerable water consumption (see Figure 3 or Table 3) due to the organosolv and solvent wash sections accounting for 46% and 49% of the water consumed. Consequently, the ACS-based process generates 46 times more wastewater compared to the fossil-based case (see Appendix B, Table B.2). Although a higher amount of wastewater is sent back to the water source after water treatment compared to the fossil-based process, the total water consumption for producing 358 kt/y of isobutene in the ACS-based process is 252 times higher, mostly due to the losses associated with the higher utility usage (i.e., cooling water).

Finally, one aspect that is often ignored when conducting technology assessments of ACS processes is land requirements. The difference in total bare land requirements between the fossil-based and bio-IBN processes is 90 times, which reemphasises the need to evaluate the special constraints of integrating a new process into existing clusters.

3.1.4 Sensitivity analysis

Figure 4 presents the results of the sensitivity analysis. It shows that changes in electricity prices have a higher effect on the MSP than biomass and steam price fluctuations. Changes in electricity prices affect the MSP of isobutene by 50%, while similar changes in biomass and steam prices only affect the MSP by about 12 and 7%, respectively. This is because 80% of the MSP comes from the OPEX, of which 67% comes from the costs of utilities and 21% from the raw materials. Increasing the steam price lowers the bio-isobutene MSP due to excess steam production, but the fluctuation is minor (7%). Even with the lowest prices of raw materials or utilities, the MSP of isobutene is still far from its market price and remains between 1.2 to 3.4 times higher.

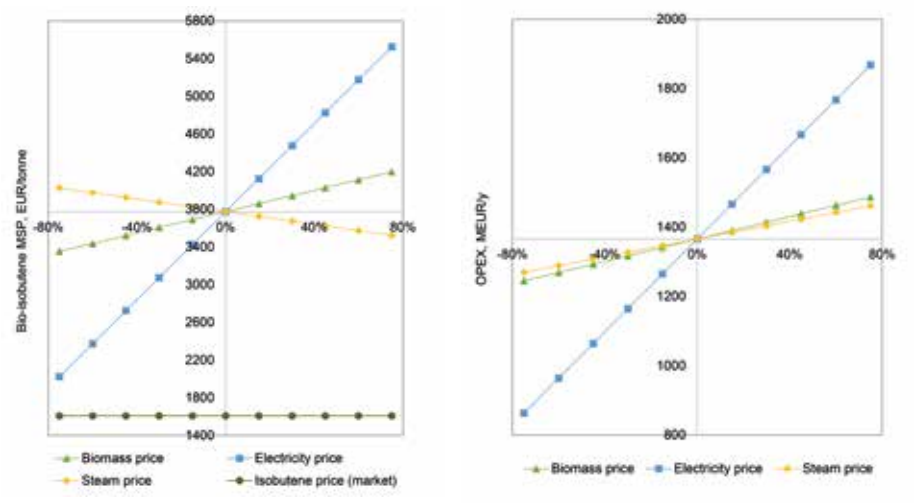

(a) (b)

Figure 4. Results from the sensitivity analysis: (a) changes in the MSP of bio-isobutene; (b) changes in OPEX of the bio-IBN process.

3.2 Impact assessment at cluster level

Besides examining the performance at the process level, this work additionally explores the implications at the cluster level after deploying the ACS-based process. The mass balances and net energy requirements of the fossil and bio-MTBE clusters are presented in Figure 5 and Table 5. Figure 6 shows the main changes in material and energy flows and units of the existing processes in the MTBE cluster (fossil-based) if the bio-IBN process would be deployed in the cluster.

Two changes in the structure of the cluster need to be highlighted (see Figure 6). The first is that the bio-IBN production process does not require TBA (504 kt/y). However, in the PoR, TBA is a byproduct of a process that produces PO and TBA (where PO is the main product); therefore, as far as PO is produced, TBA will still be produced in the cluster regardless of its further use. It could be considered for sale to the market. However, as this is fossil TBA, it remains questionable whether this will be possible in the future (if there is no market for fossil-based chemicals). Second, as the purpose of the fossil-based isobutene production (and related flows) is to provide a raw material for MTBE production, which is now substituted by isobutene produced from the bio-IBN process, thus the isobutene production process (fossil-based) is not needed in the ACS-based cluster. Note that due to the production of PO, upstream units, and therefore their material and energy requirements, remain unchanged.

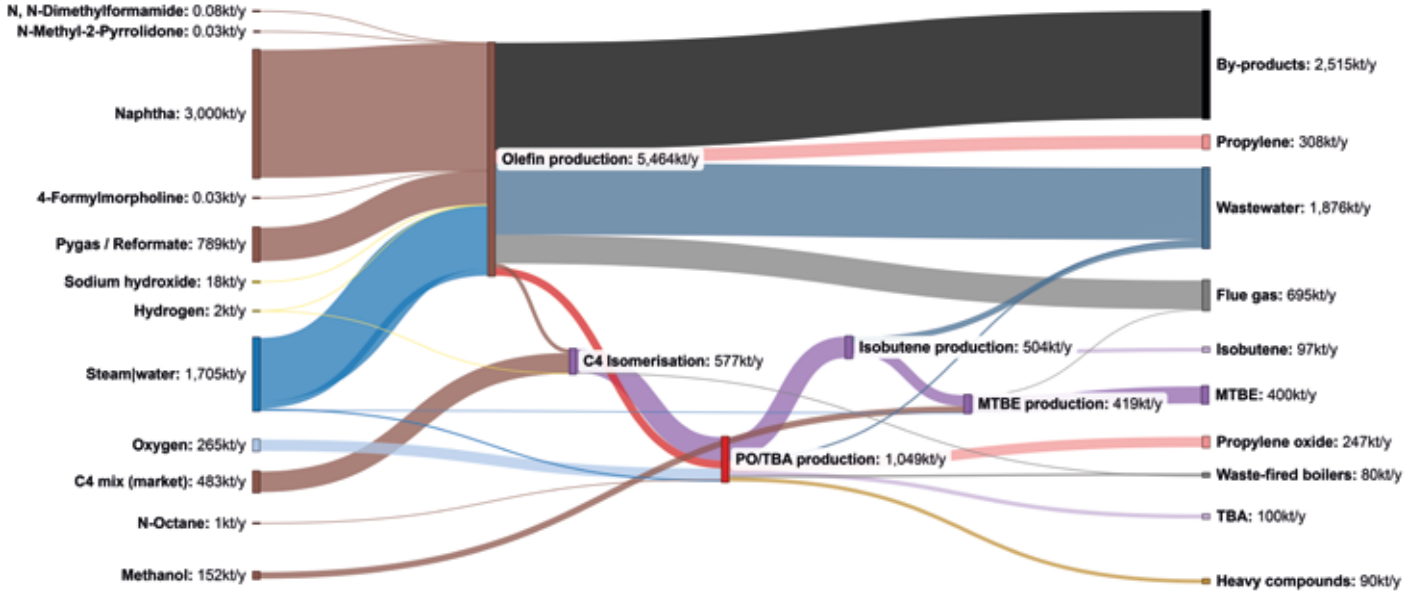

Figure 5. Sankey diagram of mass flows of (a) fossil-MTBE cluster. LSW & SWR - lignin and solvent wash unit and solvent and water recovery unit.

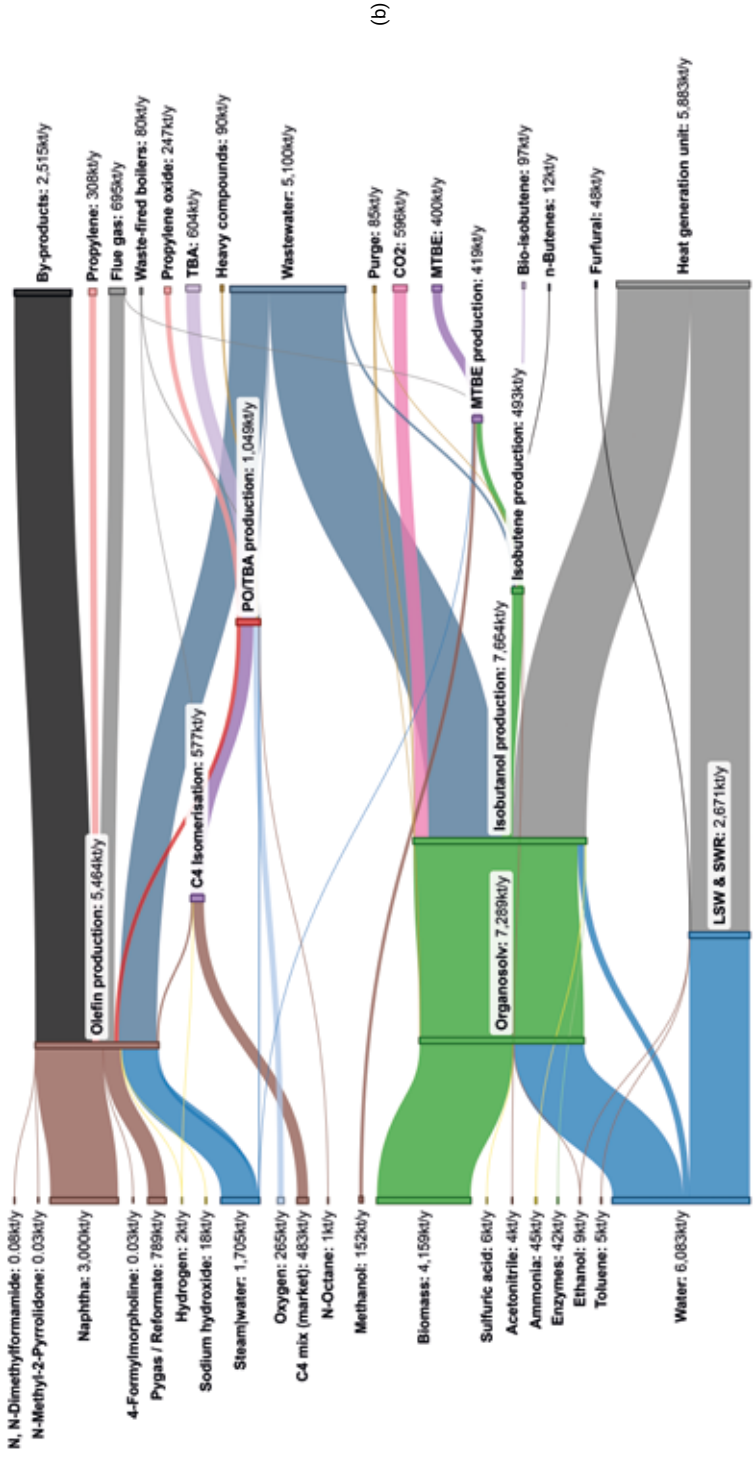

Figure 5. Sankey diagram of mass flows of (b) ACS-based MTBE cluster. (Continued).

Figure 5 shows that the deployment of the bio-IBN process affects the overall amount of feedstocks consumed in the cluster, which is now 2.6 times higher than the base case. The feedstock profiles differ in the ACS-based cluster, with around 36% of the feedstocks being from bio-based sources, 26% from fossil-based origin, and 46% from process water.

For the energy needs of the fossil-based cluster, the waste-fired boilers, which currently burn waste-fuel streams from two processes in the cluster (C4 isomerisation and PO/TBA production), cover about 93% of the total demand of LLPS required for PO/TBA process (see Appendix B, Table B.1). Of the remaining 7%, around 6% is supplied from the MTBE process, and the rest is bought from CHPs in the cluster and/or market. The remaining power and energy needs of the processes in the fossil-based MTBE cluster are covered by the existing CHPs in the cluster or bought directly from the market (see [28] and Appendix B, Table B.1).

Because of deploying the new bio-IBN process, there is a shift in energy consumption (see Table 5). There is also a significant increase in cooling water and electricity after integration, 4.2 and 3.4 times, respectively. Notably, the generated LLPS and LPS steam from the ACS-based process can fully or partially cover the needs of the fossil-based cluster. However, additional MPS, cooling water and electricity are still required to cover all the needs of the integrated bio-IBN process. Furthermore, although the energy flows that were originally supplied to the isobutene process (fossil-based) can be utilised for the ACS-based process, they only cover about 11% of the MPS and less than 0.1% of the electricity and cooling water required by the bio-IBN process.

Table 5. Net energy requirements and cooling needs for both clusters (for more details regarding fossil-based MTBE cluster, please see Appendix A, Table A.1 and Appendix B, Table B.2. LLPS – very low-pressure steam; LPS – low-pressure steam; MPS – medium-pressure steam; HPS – high-pressure steam.

Cluster	Utility type	LLPS	LPS	MPS	HPS	Cooling water	Electricity
Fossil-based	PJ/y	2	6.6	-2.3	-5.6	36.6	12
ACS-based	PJ/y	-5.8	5	3.1	-6.6	157	41

A negative value represents the extra production of the power/energy.

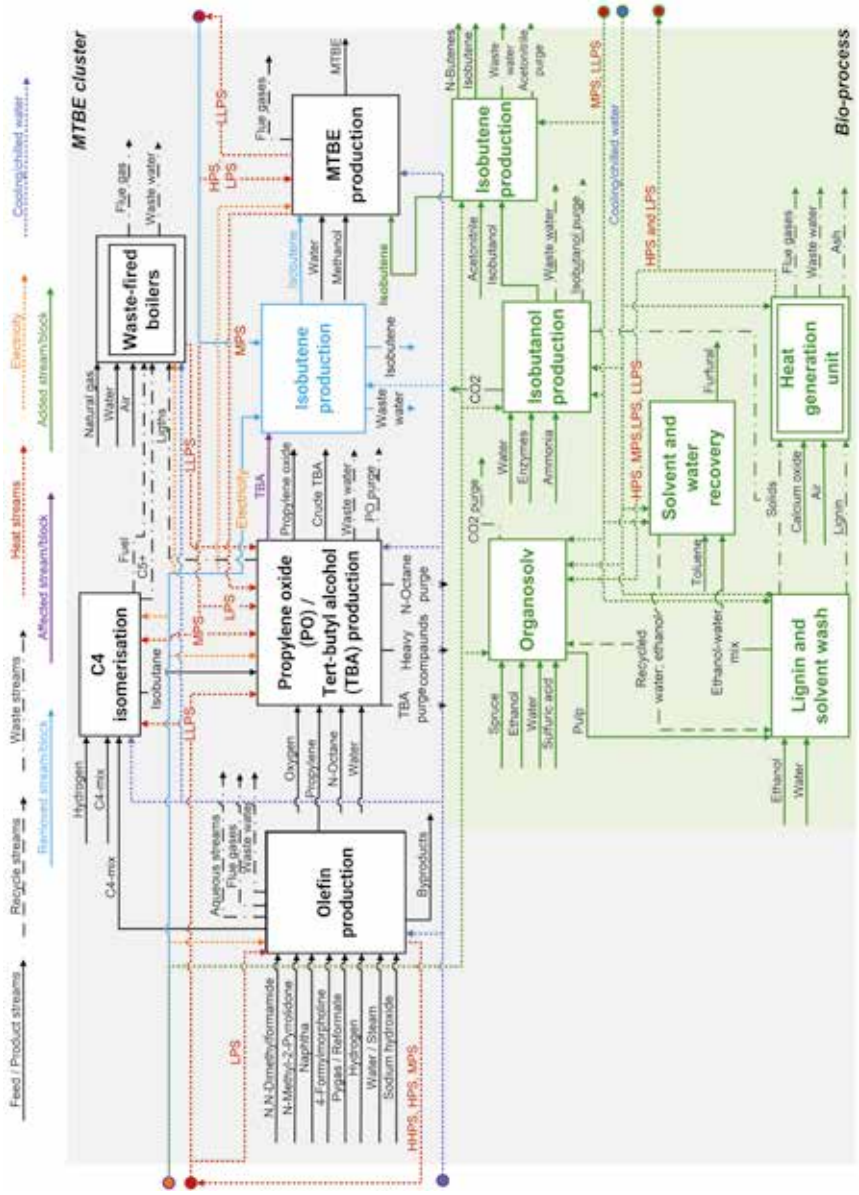

Figure 6. Changes at the cluster level due to bio-IBN production as part of the MTBE cluster. The figure shows the units/streams that would disappear (in blue) and stay but are affected (in purple) and the new units and flows (in green).

It is also worth noting that the CAPEX of the added bio-IBN process is almost an order of magnitude higher than the total CAPEX of the fossil-based MTBE cluster (see Table 6). The OPEX associated with the ACS-based case increases the total OPEX of the cluster by 61%. Savings from the wastewater treatment after the fossil-based isobutene production are about 0.22 MEUR/y.

Table 6. Changes in the economic and environmental performances of the cluster (based on the Table 1).

		Economic		Environmental	
		CAPEX	OPEX	TWC	CO_2^{total}
Process	**Structural changes**	**MEUR**	**MEUR/y**	**kt/y**	**kt $CO_{2\text{-eq/y}}$**
Olefin production	unchanged	1,130	2,900	7,943	3,884
C4 isomerisation	unchanged	37.3	309	1,057	406
PO/TBA production	unchanged	129	107	3,105	416
Isobutene production	**removed**	**-16**	**-22**	**-97**	**-122**
Waste-fired boiler	unchanged	139	36	1,671	314
MTBE production	unchanged	26	173	5,370	510
Bio-IBN production	**added**	**2,430**	**1,366**	**39,441**	**4,862**

As for the environmental performance of the MTBE cluster (see Table 6), the total water consumption of the bio-IBN process is 1.5 times higher compared to the TWC of the MTBE cluster (fossil-based). Thus, deploying the bio-IBN process would result in 3 times higher TWC of the ACS-based cluster than the fossil-based one.

Comparable to the bio-IBN process, the major share of the CO_2 emissions from the processes in the fossil-based cluster comes from the Scope 2 emissions. The bio-IBN process, which requires a high amount of steam and electricity (still produced from fossil-based sources; see Sections 3.1.1 and 3.1.3), significantly increases (2 times) CO_2 emissions of the defossilised cluster, which again underscores the critical importance of decarbonising heat and electricity.

Finally, Table 7 shows the land footprint of the different processes. It appears that 42% of the equipment in the bio-IBN process are columns with a large footprint. The number of columns used and the total land footprint of the ACS-based case result in the same order of magnitude as existing refineries [44]. Thus, deploying the bio-IBN process would 2 times enlarge the bare land requirement of the existing MTBE cluster and would require a significant amount of land in the PoR. Note that the values in Table 7 are only for bare equipment, and therefore, the real footprints will be larger as they do not include land requirements for control equipment, pipelines, storage, utilities and others.

Table 7. Number of equipment and bare land required for the fossil-based MTBE cluster and bio-IBN process (based on the Aspen Plus APEA, see Appendix A, Tables A.1 and A.2). T_e - Total number of equipment; C - Columns; TL – Total land requirement; E_c - Bare equipment costs.

Fossil-based cluster					**Bio-IBN process**				
Process	**T_e**	**C**	**TL*, m²**	**E_c, MEUR**	**Process**	**T_e**	**C**	**TL*, m²**	**E_c, MEUR**
Olefin production	118	24	1,316	177	Organosolv pretreatment	23	-	127	14
C4 Isomerisation	19	3	181	7	Lignin and solvent wash	23	2	395	23
PO/TBA production	60	11	542	26	Solvent and water recovery	85	67	2,232	734
Isobutene production	11	1	46	3	Isobutanol production	19	3	191	19
Waste-fired boilers	14	-	112	28	Isobutene production	19	4	176	11
MTBE production	17	3	70	5	Heat generation unit	14	-	1,026	18
Total:	**239**	**42**	**2,267**	**247**	**Total:**	**183**	**76**	**4,145**	**819**

*The indicator only looks at equipment footprint and does not account for any land use outside the system boundaries.

3.3 Implications and limitations

The study emphasises the need to look beyond one-to-one comparison of the processes inside existing petrochemical clusters during ex-ante analysis and assess their deployment, applicability, and impact. The study proposes performance assessments for the process and cluster levels, which could be used as an example for the defossilisation of other processes. The findings of the work would be valuable for decision-makers from industry and policy involved in designing sustainable strategies. Additionally, the work provides well-documented model data (see Appendix A, Tables A.1 and A.2), allowing future researchers to replicate models by reusing assumptions for the proposed design.

While the work provides important insights, it has limitations associated with the scope and assumptions. Firstly, this work focuses on deploying one bio-IBN production route (i.e., organosolv, hydrolysis, dehydration), leaving out other potential options (e.g., dilute-acid pretreatment, fermentation). Thus, to draw complete conclusions about which route is the most optimal for the IBN production in the existing (fossil-based) cluster, assessing and comparing the performance of the other ACS-based routes before and after their deployment is crucial. Additionally, the modelling results point out further work required to improve the bio-IBN model, mainly optimisation of the heat integration. The gate-to-gate boundary should be expanded for a complete environmental life cycle assessment. Moreover, land availability is required to be considered while assessing the transition of the petrochemical cluster, as the latter ones are usually within populated areas, with limited land for new processes to be integrated. Lastly, the study focuses on the assessment of deploying one single alternative process, while in real-world scenarios, possibly two or more DD processes can be defossilised simultaneously.

4. CONCLUSIONS

This research stresses the need and importance of looking beyond one-to-one comparison in ex-ante analyses of the new processes and further developing the understanding of the impacts after deploying them in existing industrial clusters. To support that, a case study is used to illustrate the deployment of the bio-IBN process in place of the fossil-based one in the existing MTBE production in the Port of Rotterdam. While the performance at the process and cluster levels was evaluated using proposed techno-economic and environmental KPIs, the structural changes at the cluster level were identified using impact assessment. At the process level, biomass usage for bio-IBN production shifts the carbon source from fossil-based to 99% biogenic. However, the bio-IBN process (on an industrial scale) is currently not competitive with the fossil-based one. This is mainly due to the high complexity of the process, which results in higher bare equipment costs and utility usage (caused mainly by the distillation units after the organosolv reactor) and affects the CAPEX and OPEX. The CO_2 emissions (Scope 1 and 2) of the bio-IBN are highly affected by the carbon footprint of the steam and electricity used from the market. If steam and electricity are produced from fossil sources (as is today the case), the ACS-based case would result in significantly higher CO_2 emissions than the fossil-based case. This stresses the need for additional improvements in the process layout to enhance bio-IBN process competitiveness and include externality costs in the fossil-based process.

At the cluster level, the deployment of the bio-IBN process changed the existing structure of MTBE production, as the isobutene process (fossil-based) would no longer be required. As a result, there is a shift in energy requirements of the MTBE cluster, primarily enlarging its MPS and electricity needs (still produced from fossil-based sources), resulting in (2 times) higher CO_2 emissions (Scope 2). This highlights the necessity of decarbonising heat and electricity sources while defossilising the MTBE cluster in the PoR. Furthermore, the results have shown that bio-IBN requires 90 times more bare land than the fossil-based process. Thus, defossilisation of the MTBE cluster in the PoR by integrating the bio-IBN process would significantly enlarge the required land footprint of the full cluster by a factor of 2. This highlights the importance of examining land requirements, often overlooked in ex-ante assessments. In the present work, bio-IBN production would require about 4 Mt/y of biomass to reach the same amount of the fossil-based isobutene produced inside the MTBE cluster today. Thus, finally, an aspect that needs further research regards the availability of non-fossil feedstocks and the implications for their use in the chemical industry.

SUPPLEMENTARY DATA

Supplementary data for Chapter 2 can be found in Appendixes A and B.

5. REFERENCES

(1) Wright, S. *Chemical profile: Europe MTBE*. https://www.icis.com/subscriber/icb/chemicalprofile?commodityId=10184&regionId=10345 (accessed 2023-04-25).

(2) Statista. *Production capacity of methyl tertiary butyl ether worldwide in 2018 and 2023*. https://www.statista.com/statistics/1067431/mtbe-production-capacity-globally/ (accessed 2023-04-25).

(3) Research and Markets. *Global Methyl Tertiary Butyl Ether (MTBE) Market Report 2020-2025: Demand for Use as an Anti-knocking Agent and as an Octane Booster in the Fuel for Gasoline Engines*. https://www.globenewswire.com/news-release/2020/11/18/2128922/28124/en/Global-Methyl-Tertiary-Butyl-Ether-MTBE-Market-Report-2020-2025-Demand-for-Use-as-an-Anti-knocking-Agent-and-as-an-Octane-Booster-in-the-Fuel-for-Gasoline-Engines.html (accessed 2025-01-24).

(4) Argus. *Energy and commodity podcasts. Chemical Conversations: MTBE Outlook*. https://www.argusmedia.com/en/news-and-insights/energy-and-commodity-podcasts/chemical-conversations-mtbe-outlook (accessed 2025-01-23).

(5) de Haas, J.; van Dril, T. *Decarbonisation Options for the Industry Cluster Botlek/Pernis Rotterdam*; The Hague, 2022. www.pbl.nl/en.

(6) Yong, C.; Keys, A. *Decarbonisation Options for Large Volume Organic Chemicals Production, Lyondellbasell Rotterdam*; The Hague, 2021. www.pbl.nl/en.

(7) SABIC. *Bio-Methyl tertiary butyl ether(BIO-MTBE)*. https://www.sabic.com/en/products/chemicals/oxygenates/sabic-methyl-tertiary-butyl-ether-mtbe (accessed 2024-11-13).

(8) Mary Bailey. *Global Bioenergies starts up production of bio-based isobutene*. https://www.chemengonline.com/global-bioenergies-starts-up-production-of-bio-based-isobutene/?printmode=1 (accessed 2023-04-26).

(9) Optisochem. *OPTimized conversion of residual wheat straw to bio-ISObutene for bio based CHEMicals*. https://www.cbe.europa.eu/projects/optisochem (accessed 2023-04-26).

(10) Moncada, J.; Posada, J. A.; Ramírez, A. Comparative Early Stage Assessment of Multiproduct Biorefinery Systems: An Application to the Isobutanol Platform. *Bioresour. Technol.* **2017**, *241*, 44–53. https://doi.org/10.1016/j.biortech.2017.05.074.

(11) Wilson, J.; Gering, S.; Pinard, J.; Lucas, R.; Briggs, B. R. Bio-Production of Gaseous Alkenes: Ethylene, Isoprene, Isobutene. *Biotechnol. Biofuels* **2018**, *11* (1), 234. https://doi.org/10.1186/s13068-018-1230-9.

(12) Thuijl, E. V.; Ree, R. V.; Lange, T. J. D. Biofuel Production Chains: Background Document for Modelling the EU Biofuel Market Using the BIOTRANS Model. **2003**, No. December, 1–40.

(13) Ziegler-Devin, I.; Chrusciel, L.; Brosse, N. Steam Explosion Pretreatment of Lignocellulosic Biomass: A Mini-Review of Theorical and Experimental Approaches. *Front. Chem.* **2021**, *9*. https://doi.org/10.3389/fchem.2021.705358.

(14) Humbird, D.; Davis, R.; Tao, L.; Kinchin, C.; Hsu, D.; Aden, A.; Schoen, P.; Lukas, J.; Olthof, B.; Worley, M.; Sexton, D.; Dudgeon, D. *Process Design and Economics for Biochemical Conversion of Lignocellulosic Biomass to Ethanol: Dilute-Acid Pretreatment and Enzymatic Hydrolysis of Corn Stover*; Golden, CO (United States), 2011. https://doi.org/10.2172/1013269.

(15) Wildschut, J.; Smit, A. T.; Reith, J. H.; Huijgen, W. J. J. Ethanol-Based Organosolv Fractionation of Wheat Straw for the Production of Lignin and Enzymatically Digestible Cellulose. *Bioresour. Technol.* **2013**, *135*, 58–66. https://doi.org/10.1016/j.biortech.2012.10.050.

(16) Rabelo, S. C.; Nakasu, P. Y. S.; Scopel, E.; Araújo, M. F.; Cardoso, L. H.; Costa, A. C. da. Organosolv Pretreatment for Biorefineries: Current Status, Perspectives, and Challenges. *Bioresour. Technol.* **2023**, *369*, 128331. https://doi.org/10.1016/j.biortech.2022.128331.

(17) Janković, T.; Straathof, A. J. J.; Kiss, A. A. Enhanced Isobutanol Recovery from Fermentation Broth for Sustainable Biofuels Production. *Energy Convers. Manag. X* **2024**, *21*, 100520. https://doi.org/10.1016/j.ecmx.2023.100520.

(18) Grand view research. *Market analysis report: Bio-butanol Market Size & Trends*. 978-1-68038-523-6. https://www.grandviewresearch.com/industry-analysis/bio-butanol-industry (accessed 2025-01-24).

(19) Fu, C.; Li, Z.; Jia, C.; Zhang, W.; Zhang, Y.; Yi, C.; Xie, S. Recent Advances on Bio-Based Isobutanol Separation. *Energy Convers. Manag. X* **2021**, *10*, 100059. https://doi.org/10.1016/j.ecmx.2020.100059.

(20) Tian, K.; Li, Q.; Jiang, W.; Wang, X.; Liu, S.; Zhao, Y.; Zhou, G. Effect of the Pore Structure of an Active Alumina Catalyst on Isobutene Production by Dehydration of Isobutanol. *RSC Adv.* **2021**, *11* (20), 11952–11958. https://doi.org/10.1039/D1RA00136A.

(21) Roes, A. L.; Patel, M. K. Ex-Ante Environmental Assessments of Novel Technologies – Improved Caprolactam Catalysis and Hydrogen Storage. *J. Clean. Prod.* **2011**, *19* (14), 1659–1667. https://doi.org/10.1016/j.jclepro.2011.05.010.

(22) van der Spek, M.; Ramirez, A.; Faaij, A. Challenges and Uncertainties of Ex Ante Techno-Economic Analysis of Low TRL CO2 Capture Technology: Lessons from a Case Study of an NGCC with Exhaust Gas Recycle and Electric Swing Adsorption. *Appl. Energy* **2017**, *208* (August), 920–934. https://doi.org/10.1016/j.apenergy.2017.09.058.

(23) Posada, J. A.; Patel, A. D.; Roes, A.; Blok, K.; Faaij, A. P. C.; Patel, M. K. Potential of Bioethanol as a Chemical Building Block for Biorefineries: Preliminary Sustainability Assessment of 12 Bioethanol-Based Products. *Bioresour. Technol.* **2013**, *135*, 490–499. https://doi.org/10.1016/j.biortech.2012.09.058.

(24) Moncada, J.; Posada, J. A.; Ramírez, A. Early Sustainability Assessment for Potential Configurations of Integrated Biorefineries. Screening of Bio-based Derivatives from Platform Chemicals. *Biofuels, Bioprod. Biorefining* **2015**, *9* (6), 722–748. https://doi.org/10.1002/bbb.1580.

(25) Porter, M. Clusters and the New Economics of Competition. *Harv. Bus. Rev.* **1998**, *Reprint 98* (November-December), 3–8.

(26) Saygin, D.; Gielen, D. Zero-Emission Pathway for the Global Chemical and Petrochemical Sector. *Energies* **2021**, *14* (13), 3772. https://doi.org/10.3390/en14133772.

(27) Boons, F.; Spekkink, W.; Mouzakitis, Y. The Dynamics of Industrial Symbiosis: A Proposal for a Conceptual Framework Based upon a Comprehensive Literature Review. *J. Clean. Prod.* **2011**, *19* (9–10), 905–911. https://doi.org/10.1016/j.jclepro.2011.01.003.

(28) Tan, M.; Ibarra-González, P.; Nikolic, I.; Ramírez Ramírez, A. Understanding the Level of Integration in Existing Chemical Clusters: Case Study in the Port of Rotterdam. *Circ. Econ. Sustain.* **2024**, No. submitted for review. https://doi.org/10.1007/s43615-024-00410-5.

(29) Constant, S.; Wienk, H. L. J.; Frissen, A. E.; Peinder, P. De; Boelens, R.; van Es, D. S.; Grisel, R. J. H.; Weckhuysen, B. M.; Huijgen, W. J. J.; Gosselink, R. J. A.; Bruijnincx, P. C. A. New Insights into the Structure and Composition of Technical Lignins: A Comparative Characterisation Study. *Green Chem.* **2016**, *18* (9), 2651–2665. https://doi.org/10.1039/C5GC03043A.

(30) Wooley, R. J.; Putsche, V. Physical Property Database for Biofuels Components. **1996**, 1–32.

(31) Carlson, E. Don't Gamble with Physical Properties for Simulations. *Chem. Eng. Prog.* **1996**, *92* (10), 35–46.

(32) Kiss, A. A.; Landaeta, S. J. F.; Ferreira, C. A. I. Mastering Heat Pumps Selection for Energy Efficient Distillation. In *Chemical Engineering Transactions*; Italian Association of Chemical Engineering - AIDIC, 2012; Vol. 29, pp 397–402. https://doi.org/https://doi.org/10.3303/CET1229067.

(33) De Raad, B.; Van Lieshout, M.; Stougie, L.; Ramirez, A. Identifying Techno-Economic Improvements for a Steam Generating Heat Pump with Exergy-Based Costs Minimization. In *36th International Conference on Efficiency, Cost, Optimization, Simulation and Environmental Impact of Energy Systems (ECOS 2023)*; ECOS 2023: Las Palmas De Gran Canaria, Spain, 2023; pp 884–895. https://doi.org/10.52202/069564-0080.

(34) TNO. *ESDL Energy Data Repository*. https://edr.hesi.energy/cat/Assets (accessed 2024-10-16).

(35) FRED. *Producer Price Index by Industry: Chemical Manufacturing*. https://fred.stlouisfed.org/series/PCU325325 (accessed 2024-11-13).

(36) Manalal, J. T.; Pérez-Fortes, M.; Gonzalez, P. I.; Ramirez, A. R. Evaluation of Alternative Carbon Based Ethylene Production in a Petrochemical Cluster: Technology Screening & Value Chain Impact Assessment; 2023; pp 2453–2458. https://doi.org/10.1016/B978-0-443-15274-0.50390-5.

(37) Stepchuk, I.; Pérez-Fortes, M.; Ramírez, A. R. Impacts of Defossilising Downstream Derivatives in Petrochemical Clusters – MTBE Case Study. In *Computer Aided Chemical Engineering*; 2023; Vol. 52, pp 2429–2434. https://doi.org/10.1016/B978-0-443-15274-0.50386-3.

(38) Ruiz-Mercado, G. J.; Smith, R. L.; Gonzalez, M. A. Sustainability Indicators for Chemical Processes: I. Taxonomy. *Ind. Eng. Chem. Res.* **2012**, *51* (5), 2309–2328. https://doi.org/10.1021/ie102116e.

(39) Towler, G.; Sinnott, R. *Chemical Engineering Design: Principles, Practice, and Economics of Plant and Process Design*, 2nd ed.; Elsevier Ltd, 2013.

(40) Turton, R.; Bailie, R. C.; Whiting, W. B.; Shaeiwitz, J. A. *Analysis, Synthesis, and Design of Chemical Processes*, Third Edit.; Pearson Education, Inc., 2009.

(41) ARI-Armaturen GmbH & Co. KG. *A Practical Guide to Steam and Condensate Engineering*; https://bermo.com.br/arquivos/filemanager/downloads/informativos/A-Practical-Guide-to-Steam-and-Condensate-Enginnering_Bermo_Ari-Armaturen.pdf, 2018. https://bermo.com.br/arquivos/filemanager/downloads/informativos/A-Practical-Guide-to-Steam-and-Condensate-Enginnering_Bermo_Ari-Armaturen.pdf.

(42) UNEP. *Green Energy Choices : The Benefits, Risks and Trade-Offs of Low-Carbon Technologies for Electricity Production. Report of the International Resource Panel.*; 2016.

(43) Bulkan, G.; Ferreira, J. A.; Taherzadeh, M. J. Retrofitting Analysis of a Biorefinery: Integration of 1st and 2nd Generation Ethanol through Organosolv Pretreatment of Oat Husks and Fungal Cultivation. *Bioresour. Technol. Reports* **2021**, *15* (July), 100762. https://doi.org/10.1016/j.biteb.2021.100762.

(44) José, X. F. *Inside the Tarragona refinery*. Diari de Tarragona 215. https://www.diaridetarragona.com/tarragona/la-refineria-de-tarragona-por-dentro-GLDT201702200019 (accessed 2023-12-14).



CHAPTER 3

From feedstock to future chemicals: Rethinking carbon sources in industrial propylene clusters

THIS CHAPTER WAS ORIGINALLY PUBLISHED AS STEPCHUK, I., PÉREZ-FORTES, M., & RAMÍREZ, A. (2025). FROM FEEDSTOCK TO FUTURE CHEMICALS: RETHINKING CARBON SOURCES IN INDUSTRIAL PROPYLENE CLUSTERS. ACS SUSTAINABLE CHEMISTRY & ENGINEERING, 13(42), 17869–17880. HTTPS://DOI.ORG/10.1021/ACSSUSCHEMENG.5C05287.

ABSTRACT

The rising pressure to defossilise the chemical industry has driven research towards producing chemicals that use alternative carbon sources (ACS). However, the challenges and impacts of replacing already implemented processes and symbiotic relationships remain largely underexplored. This chapter systematically assesses the impacts of defossilising existing processes, both individually and simultaneously, in a propylene cluster in the Port of Rotterdam, the Netherlands. Nine fossil-based processes and three ACS-based processes (i.e., CO_2-based polyol, bio-propylene glycol (bio-PG), and bio-methyl tert-butyl-ether (bio-MTBE)) were included in the assessment. Integrating a single ACS-based process enlarges the propylene cluster and results in an excess of upstream chemicals that are no longer required by the ACS processes. Still, relatively simple technologies can reduce total energy and water use, resulting in lower direct CO_2 emissions and water consumption of the cluster. Deploying multiple processes in parallel can drive the full defossilisation of the cluster, but it requires a complete overhaul. The results illustrate the extent to which combining ACS-based processes could change the layout of an existing petrochemical cluster, affecting its performance. The chapter stresses the importance of assessing such deployments, considering the existing conditions in industrial clusters.

ABBREVIATIONS:

ACS	Alternative carbon sources
Bio-IBN	Bio-Isobutene
CAPEX	Capital expenditures
CBBs	Chemical building blocks
CO_2	Carbon dioxide
DD	Downstream derivative
EAOC	Equivalent annual operating costs
HPS	High-pressure steam
LLPS	Very low-pressure steam
LPS	Low-pressure steam
MEUR	Million EUR
MPS	Medium-pressure steam
MSP	Minimum selling price
MTBE	Methyl tert-butyl ether
OPEX	Operational expenditures
PG	Propylene glycol
PGME	Propylene glycol methyl ether
PJ	Peta joules
PO	Propylene oxide
PoR	Port of Rotterdam
TBA	Tert-butyl alcohol
TEE	Techno-economic and environmental
TJ	Tera joules
TL	Total bare land requirement
TWC	Total water consumption

1. INTRODUCTION

Propylene is an important chemical building block (CBB) for most petrochemical clusters, such as the Port of Rotterdam (PoR) in the Netherlands. Numerous downstream derivatives (DD) are produced from propylene, such as propylene glycol (PG), polyol, propylene glycol methyl ether (PGME), polypropylene, methyl tert-butyl ether (MTBE), isopropyl alcohol, styrene or acetone (e.g., see Figure 1). These chemicals are widely used in industrial and consumer applications as solvents, additives for paints, gasoline, packaging or de-icing agents 1. Although most DD are still produced from fossil-based feedstocks, there is a growing interest in defossilising their production by utilising alternative carbon sources (ACS), such as biomass, waste, and carbon dioxide (CO_2) [2].

Achieving the complete defossilisation of downstream chemicals is a significant challenge. Figure 2 provides an overview of the key ACS-based pathways for the production of polyol, PG, PGME and MTBE found in the literature. Further details, including references used, are reported in the supplementary data, Appendix C. Currently, many of them only enable partial defossilisation of DD production. For instance, ACS-based polyols can be produced by co-polymerisation of propylene oxide (PO) with CO_2 [3,4]. Similarly, using ACS-based methanol in PGME can reduce fossil carbon input by only 25%, with the remaining still produced from fossil sources. In both cases, achieving full defossilisation requires the use of non-fossil PO. Although PO can theoretically be produced from ACS [5,6], no direct synthesis routes have been reported in the literature (see Figure 2). The same limitation applies to other chemicals, such as PG and MTBE, which can be produced indirectly from glycerol [7] and bio-based isobutene (bio-IBN) [8]. These indirect routes allow for complete substitution of fossil-based carbon in the DD production using ACS-based feedstocks. While process-level defossilisation is technically feasible, the impacts of defossilising DD at the cluster level remain largely unexplored.

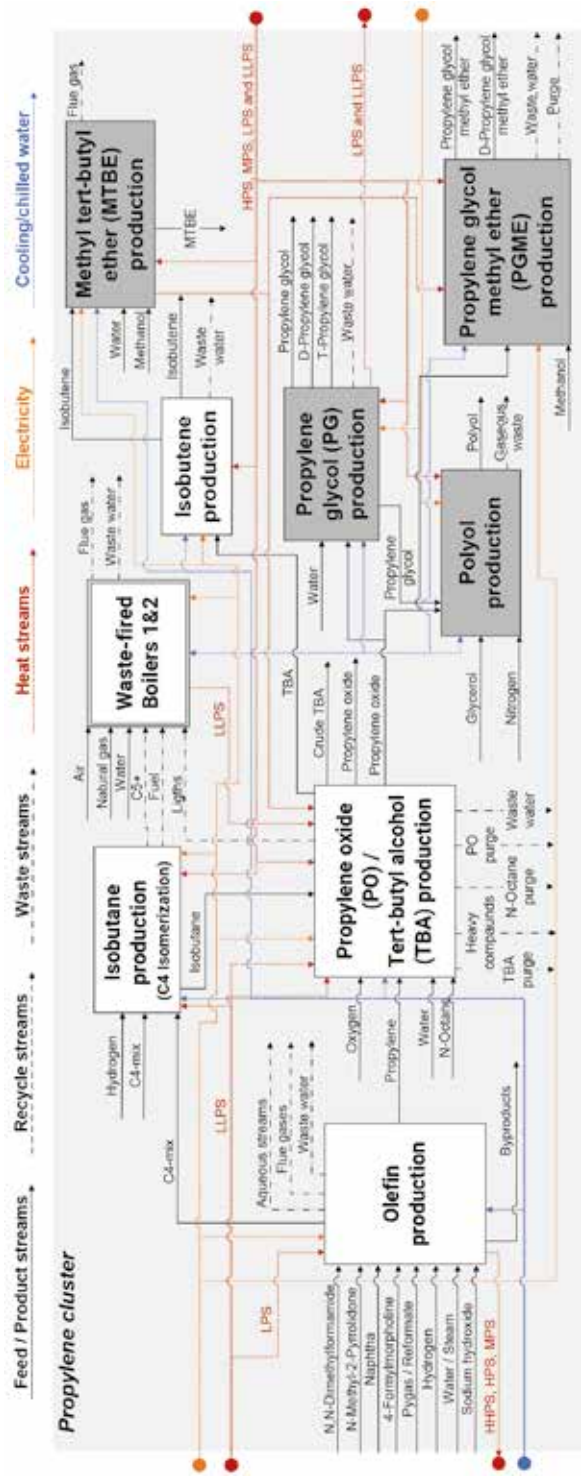

Figure 1. Block flow diagram for the current fossil-based propylene cluster at the Port of Rotterdam. The DD production processes are depicted in grey. LLPS – very low-pressure steam; LPS – low-pressure steam; MPS – medium-pressure steam; HPS – high-pressure steam.

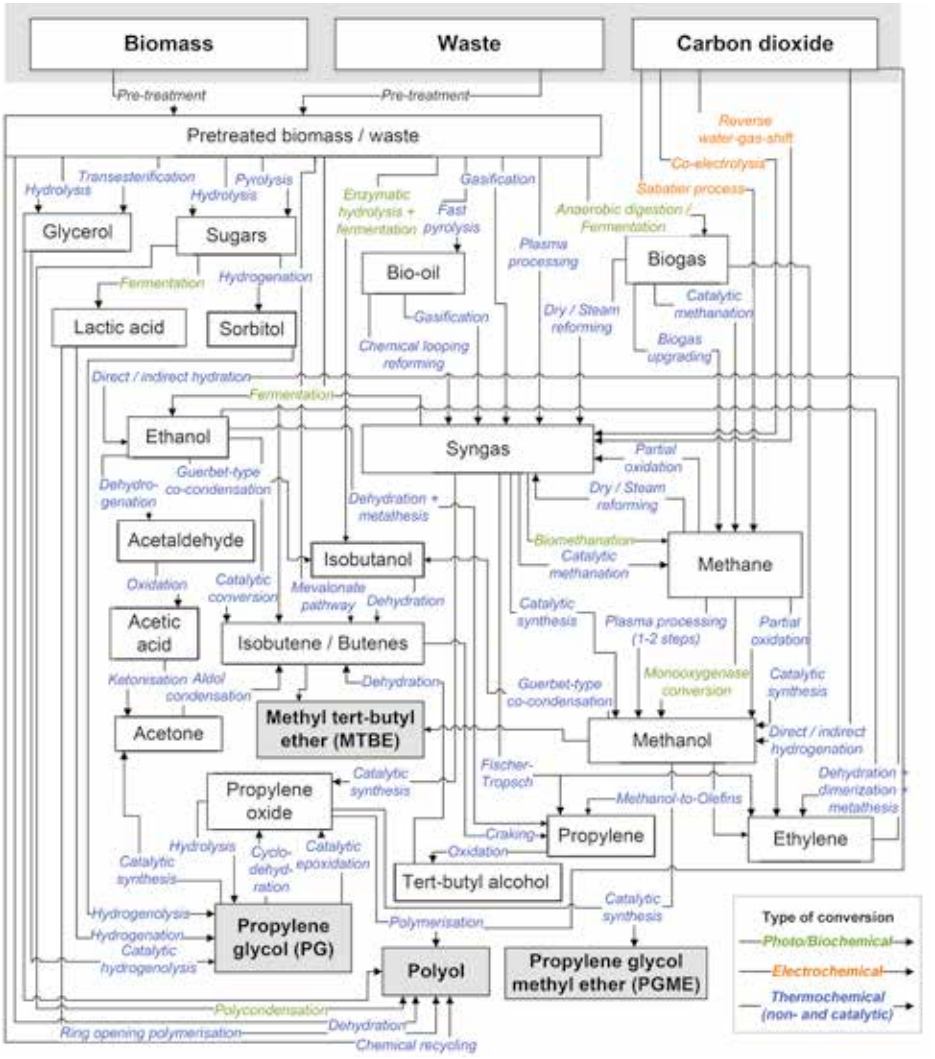

Figure 2. Overview of key ACS-based production pathways for polyol, PG, PGME and MTBE based on the literature. The list of references for the routes can be found in the Appendix C. In colour, the type of conversions are indicated.

Industrial clusters are complex systems with highly interconnected mass and energy flows, and they often face constraints such as limited land availability for new processes. This complexity is evident in the propylene cluster of PoR (see Figure 1), where multiple value chains of downstream derivatives rely on shared upstream chemicals. For example, chemical building blocks such as propylene and isobutane are used to produce intermediate chemicals like PO and TBA [9]. The intermediates are then utilised in the production of DD, such as polyol, PGE, PGME and MTBE [2]. Although ACS-based routes for DD production may also share common upstream chemicals, they typically differ from those used in fos-

sil-based routes (see Figure 2). However, these differences in production routes can create opportunities for DD to be used in circular integration in the cluster, such as for producing intermediate chemicals. For example, bio-PG can be further converted into PO [10], which can be employed to defossilise CO_2-based polyol and PGME production (see Figure 2).

However, integrating these alternative routes could significantly change the cluster's boundaries and affect its overall performance. Our previous study [8] examined the defossilisation of MTBE production by introducing a bio-IBN process. This case study highlighted the significant impacts of even a single DD process on an existing cluster. To the best of the authors' knowledge, a scenario considering the deployment of multiple alternative DD processes within an existing industrial cluster remains highly unexplored in the literature.

This chapter aims to systematically assess the cascading impacts of integrating multiple ACS-based processes for DD production in existing petrochemical clusters. Specifically, it examines the impacts of deploying ACS-based processes into the existing structure of the propylene cluster at the Port of Rotterdam (PoR), the Netherlands. The aim of this chapter is twofold: first, to assess and compare ACS processes to their fossil-based counterparts; and second, to evaluate techno-economic performance and implications in the direct CO_2 emissions and water use of integrating ACS-based DD processes within an existing industrial cluster, both individually and simultaneously.

2. MATERIALS AND METHODS

This work builds upon and extends a previous approach to assess the defossilisation impacts of deploying ACS technologies in an existing industrial cluster [8]. It consists of four main steps: (i) defining the scope and system boundaries, (ii) process modelling, (iii) assessing performance at the process level, and (iv) assessing impacts at the cluster level.

2.1 Scope definition and system boundaries

The approach focuses on defossilising the production of three downstream derivatives, polyol, PG and MTBE, shown in Figure 1 (grey boxes). The study uses an in-house model developed at TU Delft of the industrial cluster in the PoR. The model includes mass and energy interconnections between processes within the petrochemical cluster, mimicking those in the PoR. For more details, see [11]. For the assessment, two system boundaries were defined: (i) "process level" assessing the stand-alone production processes; and (ii) "cluster level", including upstream and downstream production processes involved in the cluster. Note that the processes (white and grey boxes in Figure 1) belong to different companies in the cluster.

All required feedstocks and chemicals were assumed to be bought from the market, preferably from ACS-based origin, such as ethanol, methanol, and glycerol. By-products not used in downstream processes were assumed to be sold. Mimicking the current situation

in the Port of Rotterdam, utilities (steam, electricity) were assumed to be generated and reused internally within the DD processes. When this was not feasible, utilities were either purchased from or sold to the market. These utilities were assumed to be fossil-based in line with current market conditions. While full heat integration was outside the scope of this chapter, key heat exchanges were identified using pinch point analysis in Aspen Energy Analyser to minimise external utility demand. Flue gases were assumed to be treated before release into the atmosphere. Hazardous and liquid waste were assumed to be treated off-site, with associated costs included in operational expenditures. By-products were assumed to be directly sent to the next facility or sold, without storage.

2.2 Process modelling

Fossil- and ACS-based processes were modelled in Aspen Plus v12, assuming continuous operation for 8,000 hours per year. The capacities and product purities of the ACS-based processes were set equal to those of the fossil-based counterparts in the PoR. Detailed descriptions of the process flow diagrams, modelling assumptions and property methods used, and validation of model outputs, such as mass and energy balances, are provided in the Appendix A, Tables A.1 and A.2. Due to the limited data availability for the whole ACS-based processes, validation was performed at the level of individual units rather than for the entire ACS-based process.

2.3 Assessment of individual processes

This study evaluates three ACS-based processes: (i) polyol production by partial substitution of PO by CO_2 (i.e., CO_2-based polyol); (ii) PG production from bio-glycerol (i.e., bio-PG), and (iii) MTBE production from biomass (i.e., bio-MTBE). For MTBE production, this work uses the results from our previous study on bio-IBN production [8]. The IBN process, whether fossil- or ACS-based, was considered within the boundaries of the MTBE process.

Both fossil- and ACS-based processes were assessed using the techno-economic and environmental (TEE) indicators. Definitions and equations are provided in the Chapter 2, Table 1. The technical performance of each process was assessed based on: carbon feedstock, net heat and power requirements. For the economic evaluation, four indicators were used: capital (CAPEX) and operating (OPEX) expenditures, equivalent annual operating costs (EAOC) and minimum selling price (MSP). Mass, energy balances and bare equipment costs were retrieved from the Aspen Plus models (see Appendix A, Tables A.1 and A.2). Market prices for raw materials, utilities and disposal of wastewater and hazardous wastes were obtained from publicly available data (see Appendix C). All prices were adjusted to 2018 values using the Chemical Producer Price Index [12].

The environmental indicators included: water consumption, bare land requirements, and total CO_2 emissions, including Scope 1 (direct process emissions) and Scope 2 (indirect emissions from energy use). Water consumption was defined as the amount of water permanently withdrawn from the source, including losses from utility usage. The bare land

requirement was based on the footprint of the main equipment, such as columns, reactors, and heat exchangers. Scope 2 emissions were calculated using emission factors (see Appendix A, Table A.4) derived from the stream compositions in the Aspen Plus models of utility systems, including natural gas and waste-fired boilers and combined-cycle power plants [11]).

2.4 Impact assessment at the cluster level

Two case studies were analysed to evaluate the impact of integrating ACS-based processes. Case study 1: individual defossilation, where ACS-based processes were introduced one at a time. Case study 2: simultaneous defossilisation, where multiple ACS-based processes were introduced at the same time. In both cases, the following assumptions were applied: (i) each ACS-based DD process was required to meet the existing market demand currently fulfilled by its (fossil-based counterpart; and (ii) upstream processes were included when necessary to meet the existing demand for downstream production. After each integration, the techno-economic and environmental implications were assessed at the cluster level.

2.4.1 Analysis of structural changes

To identify structural changes within the cluster, a graphical network was used to represent interconnections between processes, following the approach of [13]. First, the cases were compared regarding key differences in the processes (nodes) and their connections (mass and energy flows as links). Structural changes in terms of links and nodes were identified and categorised as follows: (i) elements completely removed (100% removal of a node or link), (ii) elements partially affected (partially reduced/added), (iii) elements that remain unchanged (same flow and composition, and processes, as in the fossil fuel-based counterpart), and (iv) new elements are added (100% new). It was assumed that a process could only be removed if its main product was no longer required in the cluster. Otherwise, it was classified as affected.

2.4.2 Techno-economic and environmental implications

The TEE assessment at the cluster level took into account the interconnectivity of units within the fossil- and ACS-based clusters. Therefore, clusters were studied as an array of production processes that share energy and material flows. Since processes within the cluster generate different products, byproducts or utilities, every production process was examined regarding the potential outputs that could be sold to the market and an economic allocation (i.e., per revenue of DD produced) was applied for the assessment (see Appendix C, Table C.2). The same TEE indicators were used as for the process level (see Section 2.3). No prices were assigned to chemicals produced and used internally within the cluster (i.e., they were considered directly available for internal use). To minimise variations in the capacities of upstream processes, caused by the differing demands for the same chemicals required for ACS-based DD processes, a 30% flexibility margin in

upstream processes was applied. This reflects a typical operational flexibility of chemical processes reported in the literature [14].

An "ambitious" approach was considered, following the defossilisation of the cluster, assuming no longer a market for fossil-based chemicals. Therefore, any fossil-based products and/or byproducts still needed to be produced but not used internally in the cluster were assumed to have a zero value and to be treated as waste, incurring disposal costs (see Appendix C). Where possible, material and energy flows from the removed processes were redirected for internal use in the cluster. If reuse was impossible, they were assumed to be sold on the market. If a process was entirely removed, its associated equipment was considered to be sold, with no potential for repurposing in ACS-based processes. The salvage market value (S_V) of such equipment was calculated assuming a service life of 25 years and a 10% annual depreciation rate (see Appendix C, Table C.1).

3. RESULTS AND DISCUSSION

3.1 Process level

Table 1 presents a summary of the techno-economic and environmental indicators of the fossil- and ACS-based processes. Compared to the fossil-based ones (see Appendix C, Table C.5), the CO_2-based polyol process utilises 38% less PO, resulting in a 40% reduction of fossil-based carbon input. For the bio-PG and bio-MTBE processes, the carbon feedstock is entirely biogenic. These ACS-based processes use glycerol, IBN, and methanol produced from biomass, thereby eliminating fossil-based PO, TBA, and methanol used in the fossil counterpart.

The energy needs of ACS-based processes differ significantly from their fossil-based counterparts (see Appendix C, Tables C.3 and C.4). The CO_2-based polyol process does not require very low-pressure steam (LLPS) and has 2.5 times lower cooling water consumption. However, due to the different pressure levels, the ACS-based process requires more electricity (i.e., for compressors) and utilises twice as much low-pressure steam (LPS). While the fossil-based PG process operates at 20 bar, the bio-based process operates at ambient pressure (1.02 bar). This requires 18% less medium-pressure steam (MPS) and 1.6 times less cooling water. Additionally, the bio-PG process produces 40 times more LPS, fully meeting its needs and exporting the surplus. In comparison to the fossil-based process, the bio-MTBE process consumes significantly more electricity and cooling water, primarily due to the size and complexity of the bio-IBN process; for more details, we refer to [8]). However, the bio-IBN process generates in-situ steam, fully covering its own and the MTBE process's needs for LPS and high-pressure steam (HPS), with excess steam exported to the market.

As shown in Figure 3, the CAPEX of all ACS-based processes are higher than that of their fossil-based counterparts (see Appendix A, Tables A.1 and A.2 for details). However, the

OPEX of the CO_2-based polyol and bio-PG processes are significantly lower, by 34% and 20%, respectively. This reduction is primarily due to the partial or complete elimination of PO usage, which has a higher price as a raw material than CO_2 or glycerol (see Appendix C). Despite the reduction in costs of raw materials, the OPEX of the bio-MTBE process is twice as high as the fossil-based process. This is mainly due to the high utility costs (i.e., cooling water and electricity) associated with the bio-IBN production, which accounts for 40% of its total OPEX.

Note that the fluctuations in the prices of ACS materials and utilities differently affect the OPEX of ACS-based processes (see Appendix C, Table C.6). The OPEX of the CO_2-based polyol process is minimally affected by changes in utility prices. In contrast, the bio-PG process shows a moderate sensitivity: utility price changes impact its OPEX by less than 10%, while a 30% increase in glycerol prices leads to an approximate 23% rise in OPEX. For the bio-MTBE process, 95% of its OPEX is attributed to the bio-IBN process, which is highly sensitive to utility price fluctuations. Biomass price variations also influence the OPEX of bio-MTBE, though to a lesser extent.

Table 1. Techno-economic and environmental indicators for the assessment of the stand-alone processes (based on the Chapter 2, Table 1). Numbers in the table are allocated (see Appendix C, Table C.2).

			Polyol		PG		MTBE	
Indicator	**Abbr**	**Units**	**Fossil**	**ACS**	**Fossil**	**ACS**	**Fossil**	**ACS**
Techno-economic								
Carbon feedstock	C_f	kt/y	43	34	38	38	431	895
Net steam consumption	TEC_{steam}	PJ/y	0.04	0.01	0.7	0.6	0.6	-2
Net cooling water consumption	TEC_{CW}	PJ/y	0.16	0.06	0.7	0.5	0.6	54
Net electricity consumption	$TEC_{electricity}$	PJ/y	-	0.01	0.002	-	0.03	13
Capital expenditures	CAPEX	MEUR	2	22	22	32	31	1,092
Operational expenditures	OPEX	MEUR/y	121	80	128	110	533	642
Equivalent annual operating costs	EAOC	MEUR/y	121	82	145	118	536	744
Minimum selling price	MSP	EUR/kg	1.7	1.2	1.6	1.4	1.3	2.1
Environmental								
Total water consumption	TWC	kt/y	55	21	345	217	864	17,593
Total bare land requirement*	TL	m^2	8	15	68	78	84	1,854
Scope 1: Process-related	$CO_2^{scope\ 1}$	kt $CO_{2\text{-eq/y}}$	0	0.5	0	0	0	1,583**
Scope 2: Energy-related***	$CO_2^{scope\ 2}$	kt $CO_{2\text{-eq/y}}$	4.6	2.9	138	134	157	2,204
Total CO_2 emissions	CO_2^{total}	kt $CO_{2\text{-eq/y}}$	4.6	3.4	138	134	157	3,787

*The indicator only looks at equipment footprint and does not account for any land use outside the system boundaries.
**Biogenic origin.
***Assuming the current energy mix of the industrial steam production (see Section 2.3).

An important point is the shift in product and byproduct profiles and corresponding revenues (see Appendix C, Table C.7). For instance, in the bio-PG process, ethylene glycol (MEG) and methanol are produced instead of di-propylene glycol (D-PG) and tri-propylene glycol (T-PG). The bio-MTBE process generates additional byproducts such as CO_2, n-butenes and furfural. As a result, compared to the fossil-based processes, the bio-PG process sees only a minor revenue decrease (c.a. 2 MEUR/y lower). In comparison, the bio-MTBE (total revenue of 284 MEUR/y) achieves double the revenue thanks to the added value of the new byproducts and utilities.

The MSPs of the fossil-based polyol and PG are close to their current market prices, while for MTBE, it is about 30% higher than the market price (see Appendix C). Note that for the assessment at the process level, PO and TBA were assumed to be purchased externally. However, in the existing propylene cluster, the same company produces TBA and MTBE, and TBA is used internally for MTBE production (see Figure 1). This integration would reduce the MSP of MTBE, making it price-competitive (see fossil-based cluster Table 3, Section 3.2). The MSPs of CO_2-based polyol and bio-PG are 20-30% lower than fossil-based processes, while the MSP of bio-MTBE is 1.6 times higher, primarily due to the higher CAPEX and OPEX of the bio-IBN process (see Table 1).

The CO_2-based polyol and bio-PG processes use less water (TWC) than their fossil-based counterparts (see Appendix C, Table C.8). In contrast, the bio-MTBE process consumes 20 times more water, primarily due to the high energy and water demands of the bio-IBN process. Regarding CO_2 emissions (Figure 4), fossil-based processes have no CO_2 emissions (Scope 1), while CO_2-based polyol and bio-MTBE processes do have emissions, but they are of ACS origin. Most CO_2 emissions for both fossil- and ACS-based, processes fall under Scope 2, originating from utility consumption. However, compared to their fossil counterparts, the CO_2-based polyol and bio-PG emit 37% and 2% less CO_2 emissions, respectively. Again, due to the high energy-intensive nature of the bio-IBN process, it emits 14 times more CO_2 emissions (Scope 2). Note that in this assessment, additional utilities were assumed to be supplied from current market conditions (i.e., fossil-based feedstocks) (see Section 2.3). If a defossilised utility supply is considered (see Appendix A, Table A.4), Scope 2 emissions of CO_2-based polyol and bio-PG processes would be significantly lower, c.a 90%. Because of the energy needs, Scope 2 emissions of the bio-MTBE process would remain higher (417 kt $CO_{2\text{-eq/y}}$) than those of the fossil-based process, but only by a factor of two. This point highlights the need to defossilise utilities along with industrial processes.

In all cases, the bare land requirement (TL) of ACS-based processes is higher than that of fossil-based counterparts (see Appendix C, Table C.8). The TL of the CO_2-based polyol and bio-PG processes are 2 and 1.1 times higher, while the bio-MTBE process is c.a. 40 times higher. Thus, deploying ACS processes within the current cluster's infrastructure would enlarge its bare land requirements. This point highlights the importance of assessing land constraints when integrating a new process into "crowded" existing clusters.

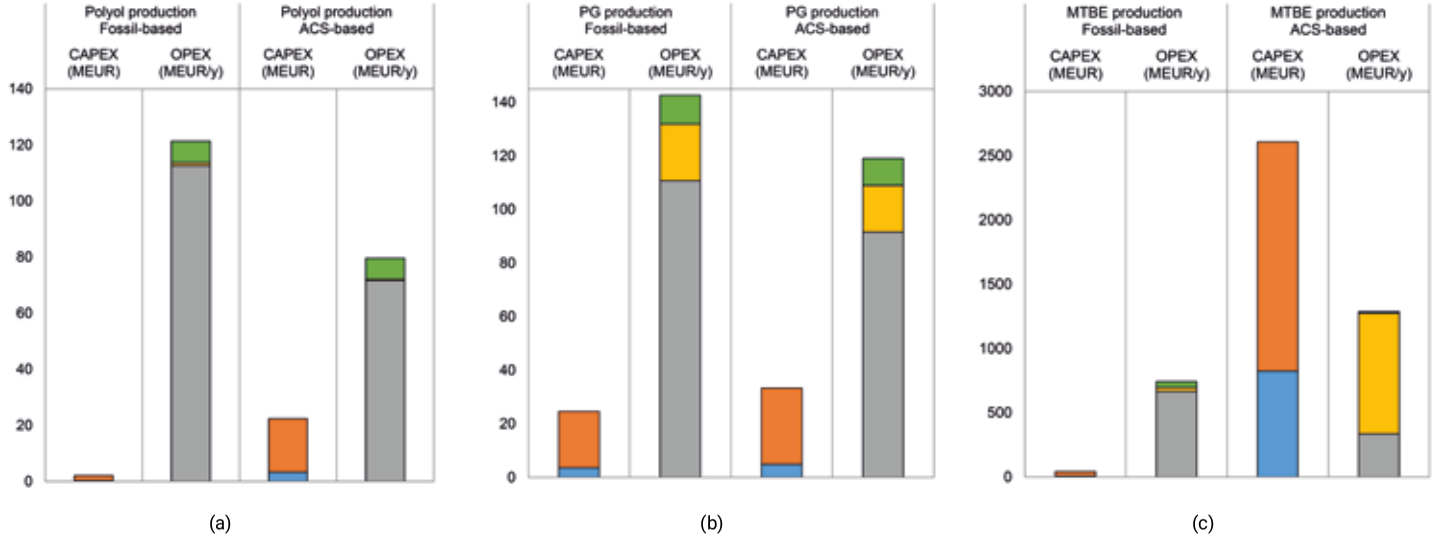

Figure 3. Total CAPEX and OPEX of fossil- and ACS-based (a) polyol, (b) PG and (c) MTBE production processes (for further details, refer to Appendix C, Table C.6). Legend: Bare equipment cost; CAPEX (other costs); Raw materials; Utilities; Waste treatment; OPEX (other costs).

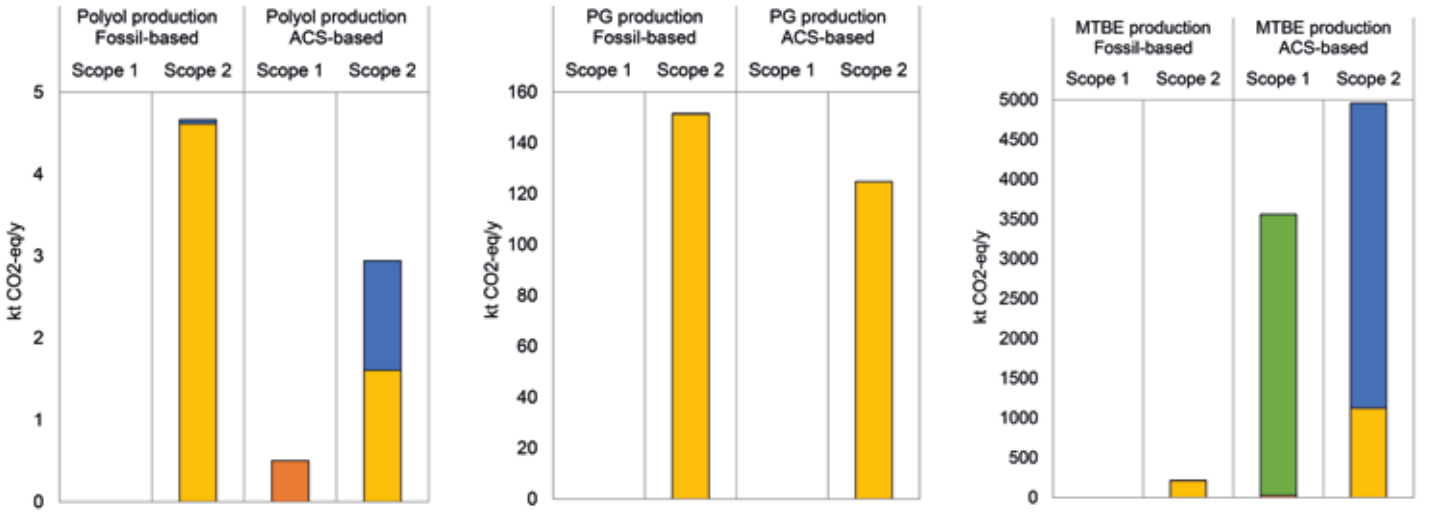

Figure 4. Total CO_2 emissions of fossil- and ACS-based production processes of (a) polyol, (b) PG and (c) MTBE (for further details, refer to Appendix C, Table C.8). Legend: Process; Heat generation (internal, biogenic); Steam usage; Electricity usage.

3.2 Cluster level

3.2.1 Case study 1 – Defossilisation of one DD at a time

The results above show that the ACS-based processes require less to no fossil-based upstream chemicals compared to the reference case (see Section 3.1). When these processes are deployed individually in the propylene cluster, the structure and production of upstream fossil-based processes remain unchanged (see Table 2 and Appendix C). This is because, in each case, either PO or TBA is still required to meet the existing demand for other DD in the cluster (see Section 3.1 and Appendix C). However, under the assumption that no external market would exist for chemicals derived from fossil-based sources (Section 2.4.2), unused PO and/or TBA in the cluster are treated as "waste".

The differences in the energy profiles between the fossil- and the alternative clusters are driven by the utility profiles of ACS processes (see Section 3.1). The bio-PG cluster shows (see Table 3) the lowest utility consumption among all one-to-one cases. This is due to the lower utility needs of the bio-PG process and its production of 300 TJ/y of LPS, which can cover c.a. 5% of the LPS demand of upstream fossil-based processes. The bio-MTBE process produces excess steam, fully covering the cluster's needs for LLPS and HPS (see Appendix C, Table C.4).

Table 2. Summary of the structural changes in processes on the cluster level after the individual deployment of ACS processes – Case study 1 (based on the Appendix C).

Fossil-based propylene cluster	Deployed process		
	CO_2-based polyol	Bio-PG	Bio-MTBE
Olefin production	unchanged	unchanged	unchanged
C4 Isomerisation	unchanged	unchanged	unchanged
PO/TBA production	unchanged	unchanged	unchanged
Isobutene production	unchanged	unchanged	**removed**
Waste-fired boiler	unchanged	unchanged	unchanged
MTBE production	unchanged	unchanged	unchanged
PGME production	unchanged	unchanged	unchanged
PG production	unchanged	**removed**	unchanged
Polyol production	**removed**	unchanged	unchanged

Although the OPEX of the CO_2-based polyol and bio-PG processes are lower at the process level (see Section 3.1), their cluster level OPEX are higher due to (i) waste treatment costs for unused fossil-based PO (i.e., 5 MEUR for polyol, 13 MEUR for PG); (ii) the ACS processes require additional chemicals that are not produced in the cluster (i.e., CO_2, glycerol). In the bio-MTBE cluster, 30% of the total OPEX of the cluster comes from the bio-MTBE process itself (mainly due to bio-IBN), while only 2% comes from the waste treatment of unused TBA (504 kt/y). The bio-PG cluster generates 2 MEUR/y less revenue than the fossil-based cluster. In contrast, the bio-MTBE cluster generates 352 MEUR/y more revenue, largely due to the additional byproducts (see Appendix C, Table C.7).

After integrating the CO_2-based polyol and bio-PG processes, the MSPs of the chemicals produced in the cluster remain unchanged compared to the fossil-based case. This is because the total CAPEX and OPEX of the cluster increase by less than 3% in both cases. In contrast, defossilising the MTBE process results in about 30% higher MSPs, primarily due to the high costs associated with bio-IBN. The salvage value (S_v) of the equipment of the replaced fossil-based processes is notably small, covering only 0.5% of the CAPEX for the new ACS-based clusters.

Table 3. Techno-economic and environmental indicators for the assessment of the propylene cluster before and after the individual deployment of ACS processes – Case study 1 (based on the indicators from Chapter 2, Table 1). The colour variation in TEE indicators refers to:
(i) increment: 0-20%; 20-40%; 40-60%; 60-100%; >100%; and
(ii) decrement: 0-20%; 20-40%; 40-60%; 60-100%; >100%.

Abbr	Units	Fossil-based propylene cluster	Deployed process		
			CO_2-based polyol	Bio-PG	Bio-MTBE
Techno-economic					
C_f	kt/y	3,699	3,707	3,739	5,619
TEC_{steam}	PJ/y	1.99	1.95	1.56	-3.15
TEC_{CW}	PJ/y	41.6	41.5	41.3	161
$TEC_{electricity}$	PJ/y	8.71	8.72	8.7	37.4
CAPEX	MEUR	1,531	1,553	1,564	3,961
OPEX	MEUR/y	3,517	3,526	3,623	4,958
EAOC	MEUR/y	3,661	3,671	3,770	5,329
MSP of Polyol	EUR/kg	1.7	1.7	1.74	2.3
MSP of PG	EUR/kg	1.4	1.4	1.45	1.9
MSP of MTBE	EUR/kg	1	1	1	1.3
S_v	MEUR	-	0.2	1.8	1.2
Environmental					
TWC	kt/y	14,744	14,710	14,589	54,089
TL*	m^2	2,435	2,451	2,516	6,581
$CO_2^{scope\ 1}$	kt $CO_{2\text{-eq/y}}$	2,231	2,232	2,231	5,793**
$CO_2^{scope\ 2}$	kt $CO_{2\text{-eq/y}}$	3,246	3,245	3,220	7,986
CO_2^{total}	kt $CO_{2\text{-eq/y}}$	5,477	5,477	5,451	13,779**

*The indicator only looks at equipment footprint and does not account for any land use outside the system boundaries.
**Scope 1 – 62% and total – 27% are from biogenic origin.

Scope 1 CO_2 emissions of alternative clusters remain unchanged in the cluster with CO_2-based polyol and bio-PG (Table 3). However, in the case of the cluster with the bio-MTBE process, Scope 1 emissions are 2.6 times higher than in the fossil-based cluster; 60% of these emissions are biogenic, originating from the bio-IBN on-site heat generation unit. Scope 2 CO_2 emissions and TWC in the defossilised clusters are directly affected by the

energy consumption and production profiles of the integrated ACS-based processes (see Section 3.1). Note that in all individual cases, Scope CO_2 emissions could be lower by 85% if the heat and electricity supplied are defossilised along with the deployment of ACS-based processes (see Appendix A, Table A.4).

3.2.2 Case study 2 – Defossilisation of several DD at the same time

The results show that simultaneously deploying all three ACS processes significantly impacts upstream production processes (see Figure 5). Starting with PO/TBA co-production, 38% of the originally PO and 83% of the TBA production rates are no longer required for synthesising the DD (see Section 3.1). However, due to the assumed limited operational flexibility of the chemical processes (see Section 2.4.2), PO production could only be reduced by 30%. Since PO and TBA are co-produced in the same process, this also constrains and limits the reduction in TBA.

The PO/TBA process relies on several upstream chemicals and utilities, i.e., propylene (187 kt/y) from olefin production, isobutane (549 kt/y) from C4 isomerisation and internal heat generated by waste-fired boilers (i.e., LLPS, 3.6 PJ/y). When PO production is reduced, the demand for isobutane and heat also decreases, thereby affecting the production capacities of the C4 isomerisation process and the waste-fired boilers. The C4 isomerisation process uses 93 kt/y of C4 mix from the olefin production (unchanged), and 483 kt/y of C4 mix is bought from the market, which is now reduced by 30% due to lower demand. Although less propylene is required for PO/TBA production, the olefin production remains unchanged. This is because the unit must still supply the same amount of the C4 mix to the C4 isomerisation process. As a result, 57 kt/y of unused fossil-based propylene and 323 kt/y of unused TBA are generated and treated as waste, incurring disposal costs (see Appendix C).

Within the propylene cluster, olefin production is the largest consumer of fossil-based carbon feedstock (87%), followed by the C4 isomerisation process (11%), (see Appendix C, Table C.5). The reduction in the C4 mix supplied from the market results in 120 kt/y less fossil carbon entering the cluster. However, the total carbon feedstock of the ACS-based cluster remains high (Table 4), with 2,118 kt/y coming from ACS-based sources.

C4 isomerisation and PO/TBA production correspond to c.a. 30% of the total energy demand of the cluster. Therefore, reducing these outputs, along with the removal of the fossil-based DD processes, leads to significant reductions in utility consumption: total steam by 20%, cooling water by 12%, and electricity by 4%. However, the new cluster requires c.a. four times higher cooling water and electricity consumption, mainly due to the bio-IBN process (see Table 4 and Figure 7(b)). Nonetheless, steam that was initially used by the removed fossil-based processes (see Appendix C, Table C.3) can be repurposed to fully cover the LLPS and LPS needs of the ACS processes, and partially (26%) of the MPS needs. The bio-MTBE process can fully (LLPS and HPS) or partially (LPS, up to 24%) cover

the needs of the upstream fossil-based processes. Nonetheless, additional MPS, cooling water and electricity are still required, mainly for the bio-MTBE process.

The CAPEX of the new cluster is 2.6 times higher than the fossil-based cluster, with 62% allocated to the bio-IBN process (see Table 4 and Figure 7 (c)). In terms of OPEX, the majority (62%) is still driven by the olefin production process, while c.a. 30% is from the ACS-based processes. Notably, the OPEX reduction from the C4 isomerisation, PO/TBA and waste-fired boilers amounts to 160 MEUR/y, while waste treatment costs for TBA and propylene disposal total 73 MEUR/y.

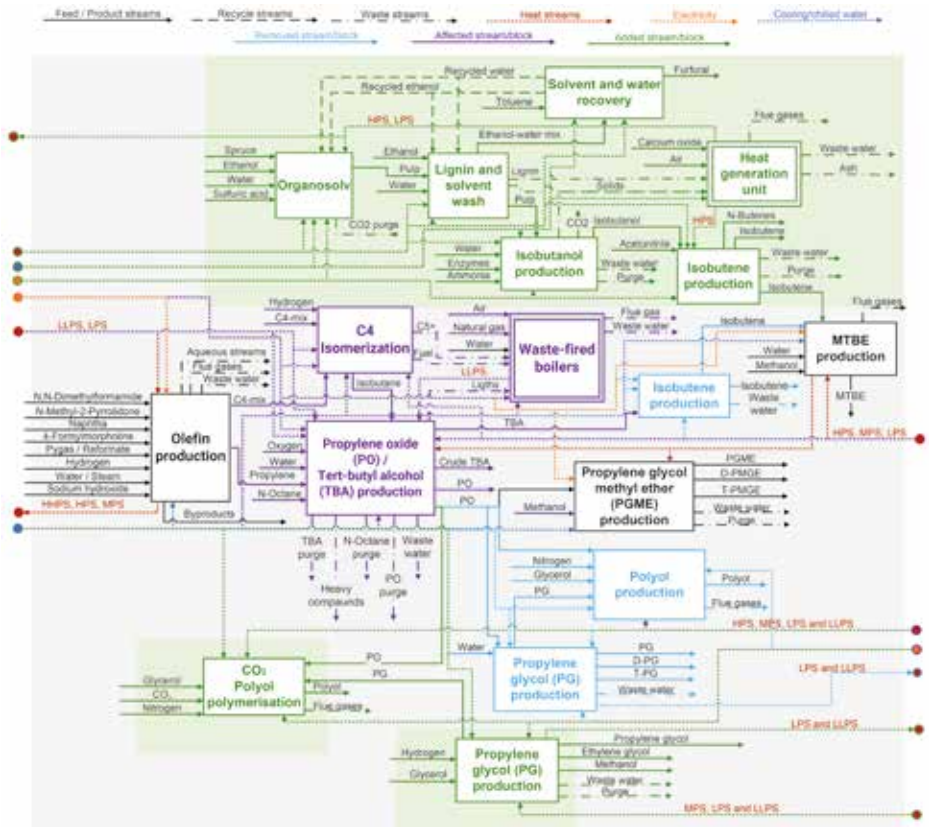

Figure 5. Map of changes inside the cluster after simultaneously integrating CO_2-based polyol, bio-PG and bio-MTBE processes (i.e., isobutene production is changed to bio-IBN, MTBE production remains the same). The figure shows the processes/streams that would disappear (in blue), the ones that stay but are affected (in purple) and the new ones (in green).

Although the ACS-based cluster generates a 10% higher revenue, the MSPs are still about 30% higher than those of the fossil-based case. This is caused by the higher CAPEX and OPEX, mainly due to the performance of the bio-MTBE process (see Section 3.1). The

salvage value (S_v) of the replaced fossil-based processes remains notoriously low (see Table 4).

Scope 1 CO_2 emissions of the alternative cluster are c.a. 63% from a biogenic origin. Scope 2 emissions are 1.5 times higher than in the fossil-based cluster, mainly due to the bio-IBN process, which alone emits 2.4 times more CO_2 emissions than the olefin production process (Figure 7 (e)). Therefore, the total CO_2 emissions (biogenic plus fossil) from the ACS-based cluster remain 2.4 times higher than those of the fossil-based cluster. Note that the Scope 2 CO_2 emissions of Case study 2 can be up to 70% lower than those of the fossil-based cluster, if the utilities used were primarily delivered from a non-fossil origin (see Appendix A, Table A.1). TWC is 4 times higher (Figure 7 (d)), 76% consumed by the bio-IBN process and 15% by olefin production.

Table 4. Techno-economic and environmental indicators for the assessment of the propylene cluster before and after simultaneous deployment of the ACS processes – Case study 2 (based on the indicators from Chapter 2, Table 1). The table shows colour variation in TEE indicators:

(i) increment: 0-20%; 20-40%; 40-60%; 60-100%; >100%; and
(ii) decrement: 0-20%; 20-40%; 40-60%; 60-100%; >100%.

Abbr	Units	Fossil-based propylene cluster	Case study 2	Additionally deployed bio-PO process
Techno-economic				
C_f	kt/y	3,699	5,525	2,118
TEC_{steam}	PJ/y	1.99	-4.74	-1.83
TEC_{CW}	PJ/y	41.6	157	123
$TEC_{electricity}$	PJ/y	8.71	37.1	28.8
CAPEX	MEUR	1,531	4,016	4,133
OPEX	MEUR/y	3,517	4,895	1,926
EAOC	MEUR/y	3,661	5,272	2,313
MSP of Polyol	EUR/kg	1.7	2.2	2.8
MSP of PG	EUR/kg	1.4	1.9	2.4
MSP of MTBE	EUR/kg	1	1.3	1.7
S_v	MEUR	-	3.1	106
Environmental				
TWC	kt/y	14,744	52,149	40,925
TL*	m^2	2,435	6,676	7,008
$CO_2^{scope\ 1}$	kt $CO_{2\text{-eq/y}}$	2,231	5,675**	3,596***
$CO_2^{scope\ 2}$	kt $CO_{2\text{-eq/y}}$	3,246	7,741	5,566
CO_2^{total}	kt $CO_{2\text{-eq/y}}$	5,477	13,416**	9,162***

*The indicator only looks at equipment footprint and does not account for any land use outside the system boundaries.
**Scope 1 – 61-63% and total – 27% are from biogenic origin;
***Scope 1 – 99% and total – 40% are from biogenic origin.

The ACS process for PGME production is excluded from the integration, as deploying an additional indirect route (see Figure 2) would likely expand the cluster further. However, the conversion of bio-PG to bio-PO, which can be internally reused for PGME and CO_2-based polyol production, may lead to different outcomes. This option is explored in the next Section 3.2.3.

3.2.3 Additional deployment of bio-PO process

The deployment of the bio-PO production process, which uses bio-PG as feedstock, along with the other ACS-based processes described in Section 3.2.2, drastically changes the structure of the existing cluster. Specifically, seven out of nine fossil-based processes are replaced (see Table 4 and Figure 6). This transformation is primarily driven by the combined impact of deploying the bio-PO and bio-IBN processes, which eliminate the need for the fossil-based PO/TBA process, olefin production, C4 isomerisation and waste-fired boilers. As a result, the propylene (187 kt/y) and isobutane (549 kt/y) previously used in PO/TBA production are no longer required. C4 mix demand is reduced by 483 kt/y (from the market) and 93 kt/y from olefin production, used in the C4 Isomerisation process. Due to the removal of the PO/TBA process, TBA (100 kt/y) is no longer supplied to the market. All products from olefin production are no longer produced in the propylene cluster (for more details, please refer to Appendix A, Table A.1, olefins). The fossil-based MTBE and PGME processes remain unchanged. The newly deployed bio-PO production process needs to meet a PO demand of 153 kt/y, which is required by the CO_2-based polyol and PGME processes and the market. To achieve this, the bio-PG production needs to be scaled up by a factor of 3.5 to produce 283 kt/y of bio-PG. This volume covers both the requirements for bio-PO production and the market demand for bio-PG (80 kt/y) (see Appendix C).

Compared to the fossil-based cluster (see Table 4 and Figure 7 (a)), the ACS-based cluster now uses 43% less total carbon feedstock, all of which is 100% derived from ACS-based sources. The alternative cluster also consumes 20% less cooling water and electricity than the configuration in Section 3.2.2, due to the removal of olefin production, C4 Isomerisation and PO/TBA production. However, it still needs 3 times more cooling water and electricity than the fossil-based cluster, mainly due to the bio-IBN process (see Figure 7 (b)). Steam integration improves efficiency. LLPS, LPS, and MPS previously supplied to the removed processes can be reused in the deployed ACS-based processes. This reuse fully covers the needs for LPS, LLPS, and 34% of MPS, while excess steam can be sold to the market. The bio-PO process (see Figure 6) includes an on-site boiler fueled by natural gas, which supplies 57% of its heating demand, with the remaining supplied from the market.

Additional deployment of the bio-PO process hardly changes the CAPEX of the alternative cluster (see Table 4 and Figure 7 (c)), which remains 2.7 times higher than that of the fossil-based cluster, with 63% of the CAPEX attributed to the ACS-based processes. Note that this assessment does not account for the costs of retrofitting or reusing the equipment, which could affect the ACS-based cluster's economic performance. Due to the removed

processes, the OPEX is c.a. 2.7 times lower than in Section 3.2.2, representing 53% of the OPEX of the removed fossil-based processes, 85% of which were due to olefin production.

The cluster's revenue is now 2.6 times lower than in Case study 2 without bio-PO (see Section 3.2.2), primarily due to removing the olefin production process, which previously accounted for 70% of the total revenue in the fossil-based cluster. Moreover, in the current configuration, 100% of the revenue of the cluster is generated by ACS-based DD processes. As a result, to achieve a payback period of 25 years, all expenses must be distributed across these ACS processes, which produce a smaller and different portfolio of products and by-products compared to the original fossil-based configuration or in the alternative cluster in Case study 2 (see Section 3.2.2). Therefore, the MSPs are higher, by almost 35% and 27%, respectively (Table 4).

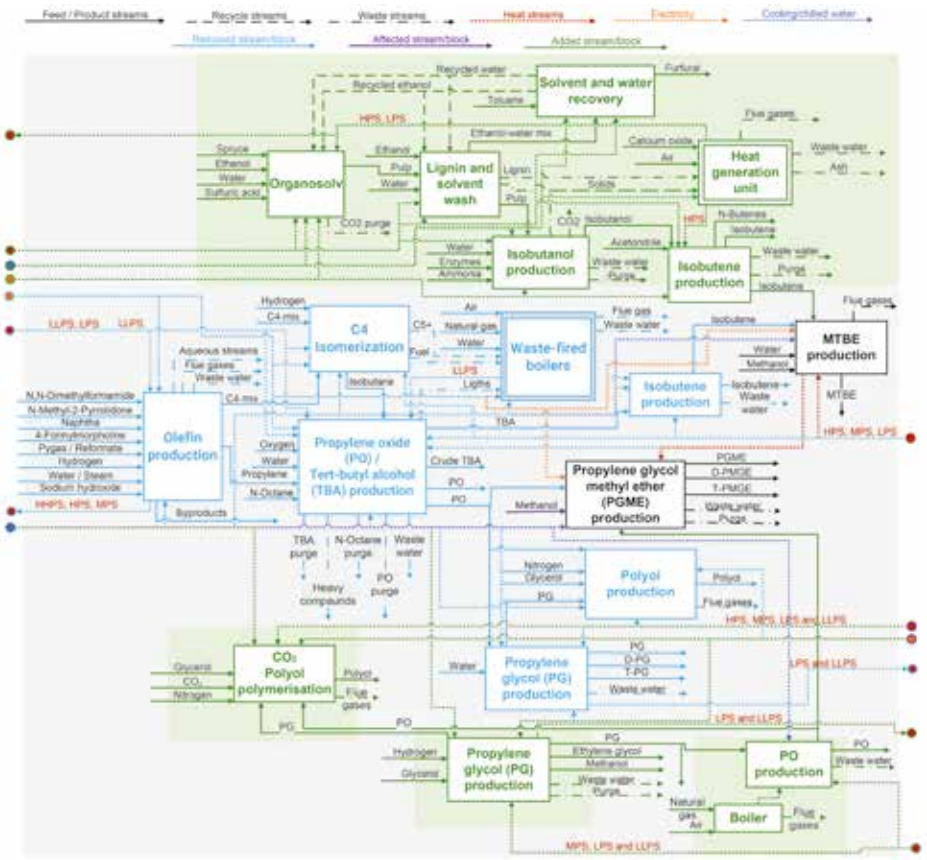

Figure 6. Map of changes inside the cluster after additionally integrating the bio-PO process. The figure shows the processes/streams that would disappear (in blue), the ones that stay but are affected (in purple) and the new ones (in green).

Less than 1% of Scope 1 CO_2 emissions are from a fossil-based origin, due to the natural gas boiler on-site for bio-PO production (see Table 4). However, Scope 2 emissions are higher than those of the fossil-based cluster due to the CO_2 emissions from the bio-IBN process (Figure 7 (e)). Employing defossilised utility sources could reduce the Scope 2 emissions to 452 kt $CO_{2\text{-eq/y}}$, corresponding to 14% of the Scope 2 emissions from the fossil-based case. Compared to Case study 2 without the bio-PO process use (see Section 3.2.2), the TWC is 26% lower, but it is still 2.8 times higher (i.e., due to the bio-IBN process) than that of the fossil-based cluster.

The results from Case study 2 show that, while additional deployment of the bio-PO process along with the other three ACS-based DDS could drive the full defossilisation of the cluster, it also introduces significant economic and environmental trade-offs. This highlights the importance of assessing the ACS technologies not as a stand-alone process, but also in the context of their integration into existing industrial clusters.

4. CONCLUSIONS

The study assesses the performance of an existing propylene cluster after integrating ACS-based processes to defosilise downstream derivatives (DD) production. Two case studies are used to explore different deployment strategies of ACS-based: (i) one DD production process at a time (i.e., individually), and (ii) multiple processes at the same time (i.e., simultaneously).

The results from Case study 1 (individual deployment) show that replacing fossil-based DD production processes, one at a time, with ACS-based alternatives does not significantly impact upstream production. However, upstream chemicals no longer required for ACS-based production, such as PO and/or TBA, are now produced in excess in the cluster. This raises a question about the fate of fossil-derived chemicals produced but not used within the cluster. Under an ambitious approach to foster defossilisation, their production must be limited, or any surplus must be treated as waste with zero market value. In all cases, the ACS-based processes increase the cluster layout, affecting its performance, reflected in both CAPEX and OPEX increases. The individual deployment of relatively simple and energy-efficient processes, such as CO_2-based polyol and bio-PG, reduces energy and water consumption, resulting in lower Scope 2 emissions of the cluster.

Case study 2 shows that deploying multiple ACS-based processes together could potentially defossilise the cluster if deploying several ACS-based processes (simultaneously) affects or eliminates the same (fossil-based) upstream unit(s), causing a so-called cascading effect. In Case study 2, Section 3.2.2, a 30% reduction in the (fossil-based) PO/TBA production results in 37% less fossil-based carbon entering the cluster. The additional deployment of the bio-PO process for PGME and CO_2-based polyol production, Section 3.2.3, ultimately removes olefin production, C4 isomerisation, and PO/TBA production,

resulting in a 100% ACS-based cluster. However, the byproducts from those processes are also removed, increasing the MSPs of the products in the ACS-based cluster (1.6 times higher). The new cluster results in three times higher capital investment than the fossil-based one. In both examples of Case study 2, while Scope 1 fossil-based CO_2 emissions are lower than for the reference case, Scope 2 emissions are higher than the baseline because the model uses the current electricity and heat grid in the PoR. Suppose the utilities are also defossilised, the ACS-based cluster results in significantly lower CO_2 emissions. This stresses the need to defossilise the utility supply along with downstream production.

Finally, several aspects require further investigation, including the availability of land in the existing clusters and the supply and logistics of ACS-based feedstocks. Additionally, the potential to reuse the equipment from removed fossil-based processes for ACS-based production and the environmental and economic implications of continuing to produce fossil-based chemicals no longer integrated in the cluster could be explored.

SUPPLEMENTARY DATA

Supplementary data for Chapter 3 can be found in Appendixes A and C.

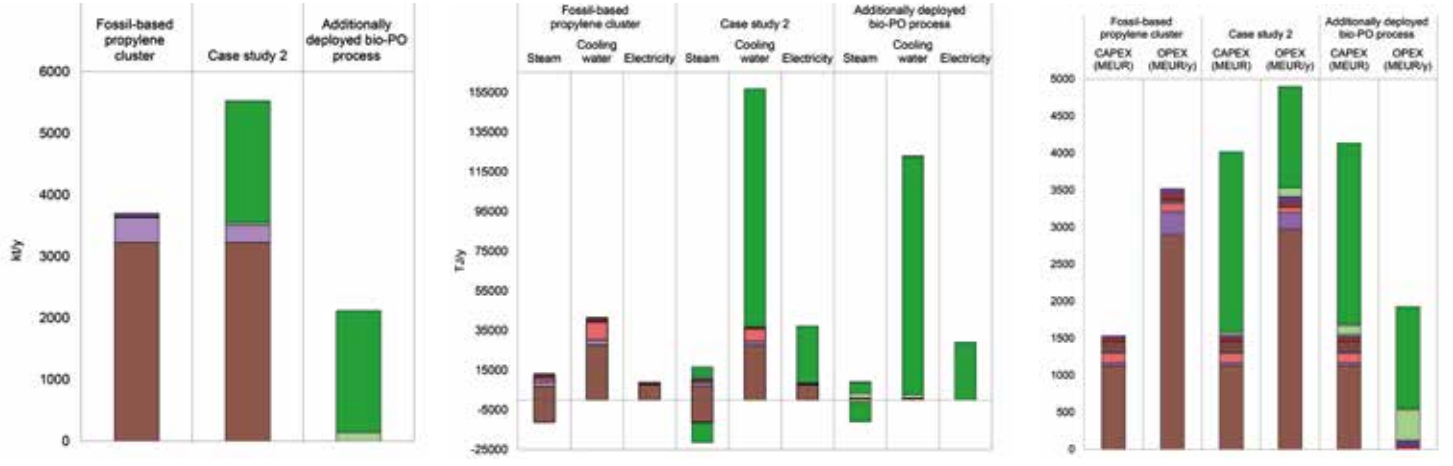

(a) (b) (c)

Figure 7. Techno-economic and environmental indicators for the assessment of the propylene cluster before and after deployment of the ACS processes simultaneously – Case study 2 : (a) carbon feedstock; (b) power/energy requirements; (c) CAPEX and OPEX. Legend: Olefin production; C4 Isomerisation; PO/TBA production; Isobutene production; WF boilers; Polyol production; PG production; PGME production; MTBE production; CO_2-based Polyol production; Bio-PG production; Bio-PO production; Bio-IBN production

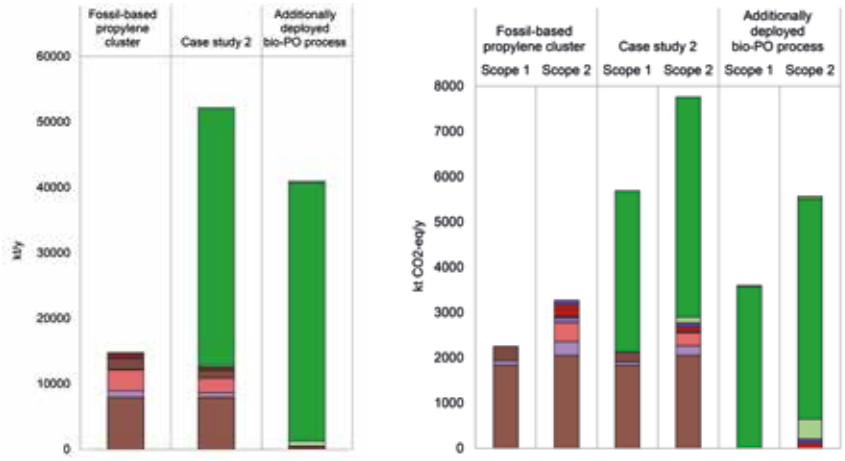

(d) (e)

Figure 7. Techno-economic and environmental indicators for the assessment of the propylene cluster before and after deployment of the ACS processes simultaneously – Case study 2: (d) water consumption; (e) CO_2 emissions. (Continued)

.

5. REFERENCES

(1) Chiyoda Corporation. Propylene and Its Derivatives. https://www.chiyodacorp.com/en/service/chemistry/propylene/ (accessed 2024-11-13).

(2) Yong, C.; Keys, A. Decarbonisation Options for Large Volume Organic Chemicals Production, Lyondellbasell Rotterdam; The Hague, 2021. www.pbl.nl/en.

(3) econic technologies. Pilot scale demonstration of novel CO_2 co-polymerisation catalysts in the PU polyol market. Deliverable D7.4. https://cordis.europa.eu/article/id/240828-better-plastics-through-cleaner-technology (accessed 2025-06-02).

(4) covestro. Building with CO_2 technology becomes possible. https://www.covestro.com/press/building-with-CO_2-technology-becomes-possible/ (accessed 2025-06-02).

(5) Yu, Z.; Xu, L.; Wei, Y.; Wang, Y.; He, Y.; Xia, Q.; Zhang, X.; Liu, Z. A New Route for the Synthesis of Propylene Oxide from Bio-Glycerol Derivated Propylene Glycol. Chem. Commun. 2009, No. 26, 3934. https://doi.org/10.1039/b907530e.

(6) Vora, B.; Pujado, P. Process for Producing Propylene Oxide. 5,599,955, February 22, 1996.

(7) Gonzalez-Garay, A.; Gonzalez-Miquel, M.; Guillen-Gosalbez, G. High-Value Propylene Glycol from Low-Value Biodiesel Glycerol: A Techno-Economic and Environmental Assessment under Uncertainty. ACS Sustain. Chem. Eng. 2017, 5 (7), 5723–5732. https://doi.org/10.1021/acssuschemeng.7b00286.

(8) Stepchuk, I.; Pérez-Fortes, M.; Ramírez, A. Assessing Impacts of Deploying Bio-Based Isobutene for MTBE Production in an Existing Petrochemical Cluster. J. Clean. Prod. 2025, 503, 145114. https://doi.org/10.1016/j.jclepro.2025.145114.

(9) de Haas, J.; van Dril, T. Decarbonisation Options for the Industry Cluster Botlek/Pernis Rotterdam; The Hague, 2022. www.pbl.nl/en.

(10) Liu, C.; Xin, J.; Tan, J.; Liu, T.; Kessler, M. R.; Zhang, J. Catalytic Conversion of Biomass-Derived 1,2-Propanediol to Propylene Oxide over Supported Solid-Base Catalysts. ACS Omega 2018, 3 (8), 8718–8723. https://doi.org/10.1021/acsomega.8b01121.

(11) Tan, M.; Ibarra-González, P.; Nikolic, I.; Ramírez Ramírez, A. Understanding the Level of Integration in Existing Chemical Clusters: Case Study in the Port of Rotterdam. Circ. Econ. Sustain. 2024, No. submitted for review. https://doi.org/10.1007/s43615-024-00410-5.

(12) FRED. Producer Price Index by Industry: Chemical Manufacturing. https://fred.stlouisfed.org/series/PCU325325 (accessed 2024-11-13).

(13) Xu, M. Understanding Graph Embedding Methods and Their Applications. SIAM Rev. 2021, 63 (4), 825–853. https://doi.org/10.1137/20M1386062.

(14) Luo, J.; Pérez-Fortes, M.; Ibarra-Gonzalez, P.; Straathof, A. J. J.; Ramirez, A. Impact of Intermittent Electricity Supply on a Conceptual Process Design for Microbial Conversion of CO_2 into Hexanoic Acid. Chem. Eng. Res. Des. 2024, 205, 364–375. https://doi.org/10.1016/j.cherd.2024.04.005.



CHAPTER 4

Navigating industrial transition: Understanding trade-offs in defossilising downstream petrochemical production

THIS CHAPTER IS BASED ON THE MANUSCRIPT STEPCHUK, I., PÉREZ-FORTES, M., & RAMÍREZ, A. (2026). NAVIGATING INDUSTRIAL TRANSITION: UNDERSTANDING TRADE-OFFS IN DEFOSSILISING DOWNSTREAM PETROCHEMICAL PRODUCTION. (SUBMITTED TO JOURNAL OF INDUSTRIAL ECOLOGY, FEBRUARY 2026, IN PEER REVIEW)

ABSTRACT:

Defossilising the chemical industry is essential and requires the use of alternative carbon sources (ACS). However, the associated challenges of replacing processes in highly symbiotic petrochemical clusters have been insufficiently assessed. The current study addresses this knowledge gap by identifying potential cascading impacts and trade-offs of deploying ACS processes for downstream production within an existing industrial cluster. For the analysis, an in-house Aspen Plus model of an industrial cluster containing 52 plants and an associated superstructure-optimisation model were used. Plants were modelled to mimic existing production rates and interconnections in the Port of Rotterdam, the Netherlands. The following downstream derivatives were considered for defossilisation: polyethylene terephthalate (PET), methyl tert-butyl ether (MTBE), polyol, propylene glycol methyl ether (PGME), propylene glycol (PG), and styrene. The optimisation model had two objectives: reducing fossil carbon use while minimising capital expenditures. The results show that defossilising these downstream derivatives could, c.a. 50% decrease the use of fossil carbon by the existing cluster. Defossilising downstream derivatives in the propylene subcluster can significantly impact upstream olefin production, as c.a. 70% of the chemicals produced in the olefin process would no longer be required downstream. The results highlight the extent to which combining different ACS-based processes could change the layout of an existing petrochemical cluster, affecting its techno-economic and environmental performance. This work also underscores the importance of considering local conditions within existing petrochemical clusters when assessing the impacts of deploying ACS processes.

ABBREVIATIONS:

ACS	Alternative carbon sources
ASU	Air separation unit
CAPEX	Capital expenditures
CBB	Chemical building blocks
DD	Downstream derivative
HPS	High-pressure steam
IBN	Isobutene
KPIs	Key performance indicators
LLPS	Very low-pressure steam
LPS	Low-pressure steam
MEG	Ethylene glycol
MeOH	Methanol
MPS	Medium-pressure steam
MTBE	Methyl tert-butyl ether
OPEX	Operational expenditures
PET	Polyethylene terephthalate
PG	Propylene glycol
PGME	Propylene glycol methyl ether
PLGA	Poly(lactic-co-glycolic) acid
PO	Propylene oxide
PoR	Port of Rotterdam
SM	Styrene monomer
SMR	Steam methane reforming unit
TBA	Tert-butyl alcohol
TEE	Techno-economic and environmental analyses
TL	Total bare land requirement
TOPSIS	Technique for order of preference by similarity to ideal solution
TWC	Total water consumption

1. INTRODUCTION

The chemical industry plays a crucial role in our lives, as many products we rely on are derived from chemicals. However, the industry remains heavily dependent on fossil carbon, both as a feedstock and for energy consumption, resulting in high greenhouse gas (GHG) emissions. In 2021, the chemical industry accounted for 5% of total GHG emissions in the EU [1]. In Europe, the Green Deal [2] set targets to reach climate neutrality by 2050, which directly affects the EU chemical sector, driving it to produce more sustainable and fossil-free chemicals. This can be done by, among other options, deploying technologies that utilise alternative carbon sources (ACS) such as biomass, CO_2, or waste [3].

Currently, major advancements are underway for developing ACS-based technologies to produce chemical building blocks (CBBs) such as ethylene and propylene, and energy carriers such as methanol [4]. To a lesser extent, literature addresses ACS options for producing downstream derivatives (DDs), such as styrene. However, the relatively smaller production capacity and lower feedstock requirements could potentially allow an easier transition towards fossil-free production [5]. Therefore, in recent years, alternative production pathways for DDs have gained interest among producers and are gradually entering the market [6]. For instance, European companies like Avantium [7], Corbion [8] and Covestro [9] have launched demonstration projects to produce ACS-based alternatives. These include bioplastics such as poly-lactic acid (PLA), poly(lactic-co-glycolic) acid (PLGA), and polyethylene furanoate (PEF), which aim to replace fossil-based polymers like polyethylene (PE), polyethylene terephthalate (PET), and polyols. In most studies, ACS-based technologies are expected to be developed as greenfield projects. While such projects are necessary, defossilising the current chemical industry requires to integrating these technologies within the established boundaries of existing industries, thereby considering brownfield conditions.

Petrochemical clusters, such as the Port of Rotterdam in the Netherlands, are well-evolved structures with high connectivity of mass and energy flows between the processes within the cluster [10]. This connectivity results in strong interdependencies between the processes. Up to date, the research has majorly focused on optimising existing clusters, to assess and increase their efficiency by sharing waste heat, water, and materials between processes and or companies [11,12]. For instance, [13] assessed synergistic effects of integrating fossil and renewable carbon-based processes for methanol production within an unintegrated cluster. However, the authors focus on a generalised cluster's structure, overlooking location-specific integrated solutions and real brownfield conditions. [14] underscored the importance of considering these factors when assessing ACS technology deployment in existing systems to obtain realistic, applicable results for decision-makers. Recent studies have started to explore brownfield conditions in the literature by applying optimisation frameworks, e.g., [15]. The latter study highlighted that replacing fossil-based processes with alternative processes in existing clusters could significantly impact their connectivity, layout, and performance. Another study [16] assessed the implications of deploying ACS

technologies for ethylene production within the chemical cluster in the Port of Rotterdam. Both works found significant changes in the cluster's performance after their integration. However, whether similar impacts could be expected after defossilising DDs, as well as the extent of the impacts, remains underexplored in the literature. In our previous work [17], we presented two case studies assessing the integration of one or multiple DD processes within an existing industrial cluster. The results showed the significance of the impacts at the cluster level, revealing potential trade-offs between existing and new processes. However, compared to the results presented by [16] and [15], deploying ACS-based DD within the cluster leads to significantly larger cascading impacts than CBB's deployment. Although the findings emphasised that combining DD processes is crucial for defossilising industrial clusters, the key knowledge gap at the core of this chapter remains unanswered: which combination of technologies for DD production offers the most optimal path for defossilising the existing industrial cluster?

The current work aims to fill this knowledge gap by assessing the impacts and trade-offs of deploying multiple ACS technologies for DDs production within an existing petrochemical cluster setup. The main aim is supported by three specific subgoals. First, to investigate the extent to which an existing chemical cluster can be defossilised by deploying multiple ACS technologies for DDs production. Second, to identify the preferred portfolio of DD technologies for defossilisation. Third, to identify potential structural changes and performance impacts at the cluster level. To the author's knowledge, this is the first study to apply multiobjective optimisation to evaluate the potential and impacts of defossilising existing petrochemical clusters using ACS technologies for DDs production.

2. MATERIALS AND METHODS

The approach consists of three main steps: (i) defining the scope of the study, (ii) formulating the objectives and constraints in the in-house superstructure-based model, and (iii) assessing the impacts and performance of deploying ACS technologies for DD production at the cluster level.

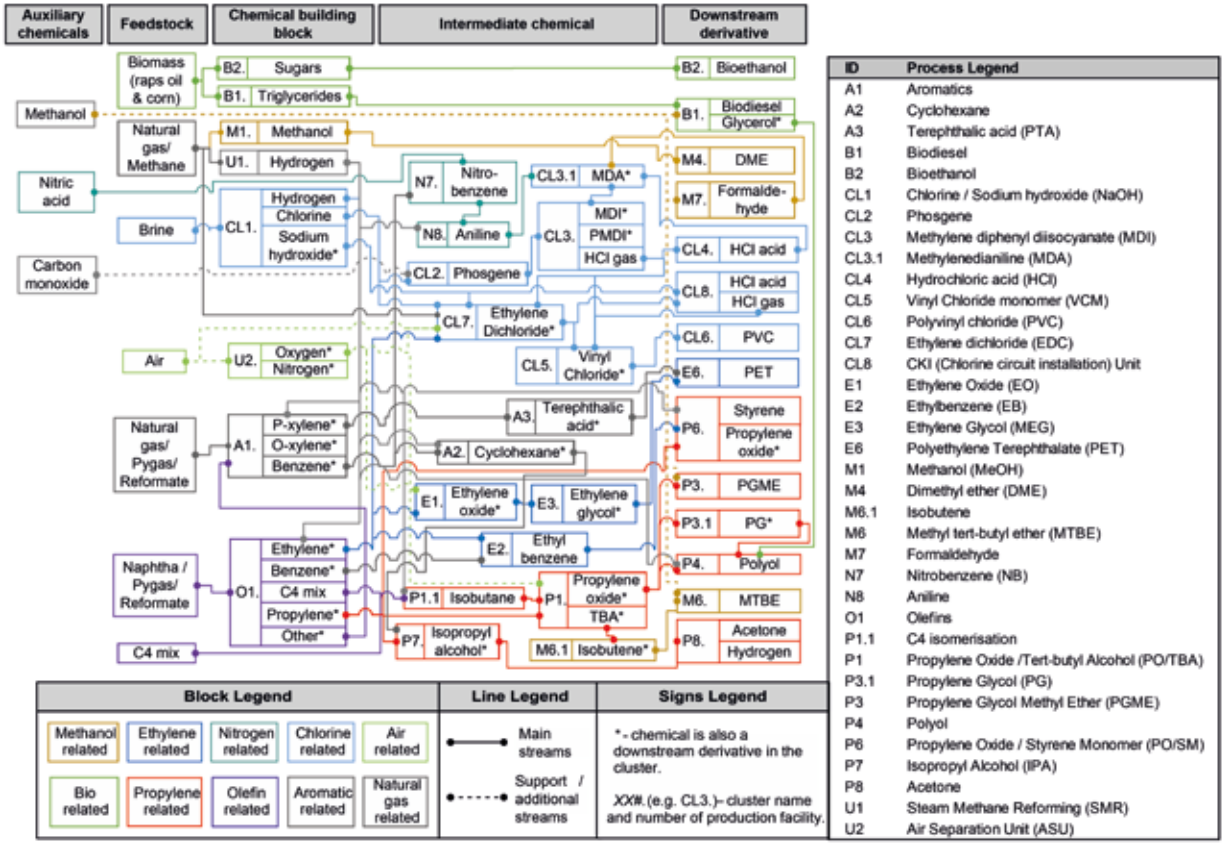

ID	Process Legend
A1	Aromatics
A2	Cyclohexane
A3	Terephthalic acid (PTA)
B1	Biodiesel
B2	Bioethanol
CL1	Chlorine / Sodium hydroxide (NaOH)
CL2	Phosgene
CL3	Methylene diphenyl diisocyanate (MDI)
CL3.1	Methylenedianiline (MDA)
CL4	Hydrochloric acid (HCl)
CL5	Vinyl Chloride monomer (VCM)
CL6	Polyvinyl chloride (PVC)
CL7	Ethylene dichloride (EDC)
CL8	CKI (Chlorine circuit installation) Unit
E1	Ethylene Oxide (EO)
E2	Ethylbenzene (EB)
E3	Ethylene Glycol (MEG)
E6	Polyethylene Terephthalate (PET)
M1	Methanol (MeOH)
M4	Dimethyl ether (DME)
M6.1	Isobutene
M6	Methyl tert-butyl ether (MTBE)
M7	Formaldehyde
N7	Nitrobenzene (NB)
N8	Aniline
O1	Olefins
P1.1	C4 isomerisation
P1	Propylene Oxide /Tert-butyl Alcohol (PO/TBA)
P3.1	Propylene Glycol (PG)
P3	Propylene Glycol Methyl Ether (PGME)
P4	Polyol
P6	Propylene Oxide / Styrene Monomer (PO/SM)
P7	Isopropyl Alcohol (IPA)
P8	Acetone
U1	Steam Methane Reforming (SMR)
U2	Air Separation Unit (ASU)

Figure 1. A schematic representation of the chemicals produced by the in-house Aspen Plus v12 model of the cluster. For simplicity, the figure only shows the main material flows. The chemicals are categorised per group and subcluster. For detailed information for each separate process, see Appendix A, Table A.1.

2.1 Scope of the study

The work utilised an existing in-house model of a representative cluster, which is presented in detail in [18]. The model mimics the mass and energy flows of real processes within the petrochemical cluster in the Port of Rotterdam (PoR) and comprises 52 processes modelled bottom-up in Aspen Plus v12. The processes produce chemicals which are classified in 9 subclusters, see Figure 1: chlorine (CL), methanol (M), ethylene (E), propylene (P), nitrogen (N), aromatics (A), olefins (O), bio-based (B), and utilities (U). The nomenclature (ID) across the processes is uniform and was designed to reflect the correspondence of the process to the subcluster. For instance under Figure 1, the ethylbenzene (E2) reads as follows: the first letter of ID corresponds to the ethylene subcluster, and the number indicates the process number within the subcluster. We refer to a detailed description in our previous work [19] for the approach used for the process modelling. Supplementary data, Appendix A, Tables A.1 and A.2, provides repository links for detailed information on each fossil- and ACS-based model used in this chapter, including process design, flow diagrams, underlying model assumptions, mass and energy balances, validation, and references.

This study examined the defossilisation of six carbon-intensive and highly interconnected DD production routes within the cluster [20]: polyethylene terephthalate (PET), methyl tert-butyl ether (MTBE), polyol, propylene glycol methyl ether (PGME), propylene glycol (PG), and styrene (SM). For this, a set of direct and indirect routes involving ACS-based processes was considered, see Table 1. The IDs of the ACS processes indicate the use of ACS, such as biomass – B, CO_2 – C, plastic (waste) - P, and a replaced fossil-based process.

Table 1. Direct and indirect production routes of the ACS-based DDs. Propylene oxide (PO), Ethylene glycol (MEG), Polyethylene terephthalate (PET), Styrene (SM), Propylene glycol (PG); Propylene glycol methyl ether (PGME); Isobutene (IBN); Methyl tert-butyl ether (MTBE); Poly(lactic-co-glycolic) acid (PLGA).

ACS	Route	Intermediate process(es) (ID)		Final process (ID)
Polystyrene (waste)	Direct	-	-	SM (PP6)
CO_2	Direct	-	-	PLGA (CE6)
	Direct	-	-	CO_2-based polyol (CP4)
Bio-glycerol	Indirect	Bio-MEG (BE3)	-	PET (E6)
	Direct	-	-	Bio-PG (BP3.1)
	Indirect	Bio-MEG (BE3)	Bio-PO (BP3.2)	PG (P3.1)
	Indirect	Bio-MEG (BE3) Bio-PG (BP3.1)	Bio-PO (BP3.2)	Polyol (P4)
	Indirect	Bio-MEG (BE3) Bio-PG (BP3.1)	Bio-PO (BP3.2)	PGME (P3)
Biomass	Indirect	Bio-IBN (BM6.1)	-	MTBE (M6)

The final capacities and purities of the ACS products were set to match those of the existing fossil-based production in the PoR. For detailed information on each process, see

Appendix A, Tables A.1 and A.2. The models for bio-PG, -MEG and -PO production were designed with specific capacities, and the number of plants was increased as required to match production rates within the existing cluster. Note that, as currently, CO_2-based polyol could be produced with 23 and 42% wt of CO_2 [21], both processes were considered in the model. Production of PLGA was considered to be a direct substitute for PET [22].

2.2 Superstructure-based optimisation model

This study employed an in-house superstructure-based optimisation model to assess the cluster's layout and performance after deploying ACS-based processes. A detailed description, objectives, and the main constraints of the model are reported in the Appendix D. For the purposes of this study, the optimisation model was used to: (i) generate an optimal portfolio of alternative carbon feedstocks and ACS technologies along with material and energy flows; (ii) provide layouts of the new industrial cluster in the form of networks (i.e., graphically).

2.2.1 Model

The model had two optimisation objectives: to minimise the amount of fossil-based carbon entering the cluster and the additional capital expenditure (CAPEX). The amount of fossil carbon entering the cluster was estimated as the total mass of carbon entering the cluster in material flows (feedstocks). The additional capital expenditure was estimated as a capital penalty-based function, consisting of the capital cost of newly added ACS processes and the cost associated with removing existing fossil-based processes. Among the two objective functions, the model was set to prioritise defossilisation over CAPEX. The model was assumed to operate under inflexible conditions, i.e., it restricted units from adjusting their production capacities. This minimised variations in unit capacity caused by differing demands for the same chemicals used in ACS-based DD processes. The model was run to generate Pareto optimal solutions, which were then ranked using the technique for order of preference by similarity to ideal solution (TOPSIS) method. The solutions were further explored in terms of the ACS portfolios of the selected processes and the final layouts of the representative cluster after their integration. Further information about the model's results can be found in Appendix D.

2.2.2 Evaluation of the solutions and staged deployment of ACS technologies

The ACS technologies across solutions were reviewed and categorised by the frequency with which each technology was selected (i.e., the number of times the ACS process appeared across solutions). Additionally, each ACS process was assessed in terms of the size and number of the plants (i.e., mode) most often presented in a single solution. Because the deployment of any process or combination of processes may affect the cluster's layout differently, a sequential deployment (i.e., in stages) of ACS processes or combinations of processes was selected for the analysis, based on the frequency with which the technology was selected. In this article, a total of five deployment stages were considered, driven by the size and complexity of the representative cluster. Stage 1 corresponded to the most

frequently selected ACS technology or combination, while stage 5 corresponded to the least occurring one(s). Note that if two processes had the same frequency, we examined the combinations in which they occurred. Based on this, the combination of co-occurred processes was assigned to an integration stage. In each stage, the (mode) number of processes was taken into account. After each stage, an impact assessment was carried out to identify structural, techno-economic, and environmental changes at the cluster level.

2.3 Impact assessment at the cluster level

The assessment focused first on identifying the structural changes after deploying ACS processes within the representative cluster. For this, a graphical network was used to represent interconnections between processes, following the approach presented in our previous study [17]. Structural changes were identified and categorised as follows: (i) elements completely removed (100% removal), (ii) elements partially affected (partially reduced/added/reconnected), (iii) elements that remain unchanged (same flow and composition, and processes as in the fossil fuel-based counterpart), and (iv) new elements are added (100% new). After each stage, the cluster was compared with the previous stage to identify key differences in the processes and their connections. Note that due to the size and complexity of the representative cluster, the focus was primarily on material flows. Energy flows were not tracked graphically, but their changes were accounted for when assessing techno-economic and environmental changes. To identify changes, the layouts of the new industrial clusters generated by the model were analysed (see Appendix D).

Following each stage, techno-economic and environmental (TEE) changes within the cluster were assessed using key performance indicators (KPIs), see definitions and formulas in the Chapter 2, Table 1, following the methodology presented in [19]. The technical performance was assessed using a carbon feedstock indicator. Capital (CAPEX) and operating (OPEX) expenditures were used for the economic evaluation. Mass and energy balances, and costs of raw materials and energy were retrieved from the optimisation model results, see Appendix D. Bare equipment costs were retrieved from the Aspen Plus models, see Appendix A, Tables A.1 and A.2.

The environmental indicators included: water consumption, bare land requirements, and total CO_2 emissions (Scope 1 and Scope 2). Note that our analysis follows a system-level perspective on carbon flows instead of a full Scope accounting approach, therefore Scope 3 emissions are not considered in the analysis. Scope 2 emissions were calculated using emission factors (see Appendix A, Table A.4). Assuming that there will no longer be a market for fossil-based chemicals, any fossil-based products and/or byproducts still produced but not used internally in the cluster were treated as waste. Water consumption refers to the amount of water permanently withdrawn from the source, including losses due to utility usage. The bare land requirement accounted for the footprint of the main equipment, including columns, reactors, and heat exchangers.

3. RESULTS AND DISCUSSION

3.1 Model outputs

3.1.1 Pareto front

The model run resulted in a Pareto front with nine potential solutions, see Figure 2. The results indicate that deploying ACS processes for DDs production could reduce up to 56% of the fossil carbon entering the cluster. Solution 6, at the extreme right of the figure, represents the fossil-based cluster as it stands today, which uses 7.7 mt of fossil carbon per year. In contrast, Solution 4, at the far left, prioritises the lowest fossil carbon at the expense of the largest CAPEX penalty. Solution 1 is a TOPSIS-preferred solution of the Pareto front, where there is a trading-off between low carbon entering the cluster and low CAPEX penalty, at the reduction of 3.8 mt of fossil carbon (c.a. 50% of total fossil carbon) and 2,651 MEUR in CAPEX penalty.

As can be observed in Figure 2, the solutions on the Pareto front appear clustered rather than forming a smooth curve. This is due to several factors: (i) not all DDs being part of the representative cluster were considered for defossilisation; and (ii) the range of ACS routes considered was restricted by the limited options available in the literature for ACS routes. This resulted in a relatively small number of intermediate options, creating gaps between the solutions and affecting the curve of the Pareto front.

In Figure 2 the solution's position on the Pareto front is primarily determined by the portfolio of technologies and the number of ACS processes. The main difference in the portfolio of ACS processes between Solution clusters 1 and 2 is the presence of the PLGA process in Solution cluster 2. Moreover, in Solution cluster 1, the number and combinations of bio-processes selected differ from those in Solution clusters 2 and 3 (see Appendix D, Table D.3). Solutions under cluster 3 are identical to Solution 2 (Solution cluster 2), except for the occurrence of the bio-IBN in Solution cluster 3. When the TOPSIS objective weights are changed, see Appendix D, the Pareto front remains unchanged and still consists of nine solutions. However, the selected ACS-based technology portfolio shifts slightly, with a tendency toward smaller ACS-based processes when CAPEX is given a higher weight, see Appendix D.

Notably, some solutions (e.g., 1 and 3, 4 and 5) have similar portfolios, while their positions on the Pareto front differ. This indicates that the existing cluster will likely be impacted differently and to different degrees after deploying similar portfolios of ACS processes. The following section focuses on identifying the most preferred ACS processes to be deployed within the existing cluster based on the Pareto front results.

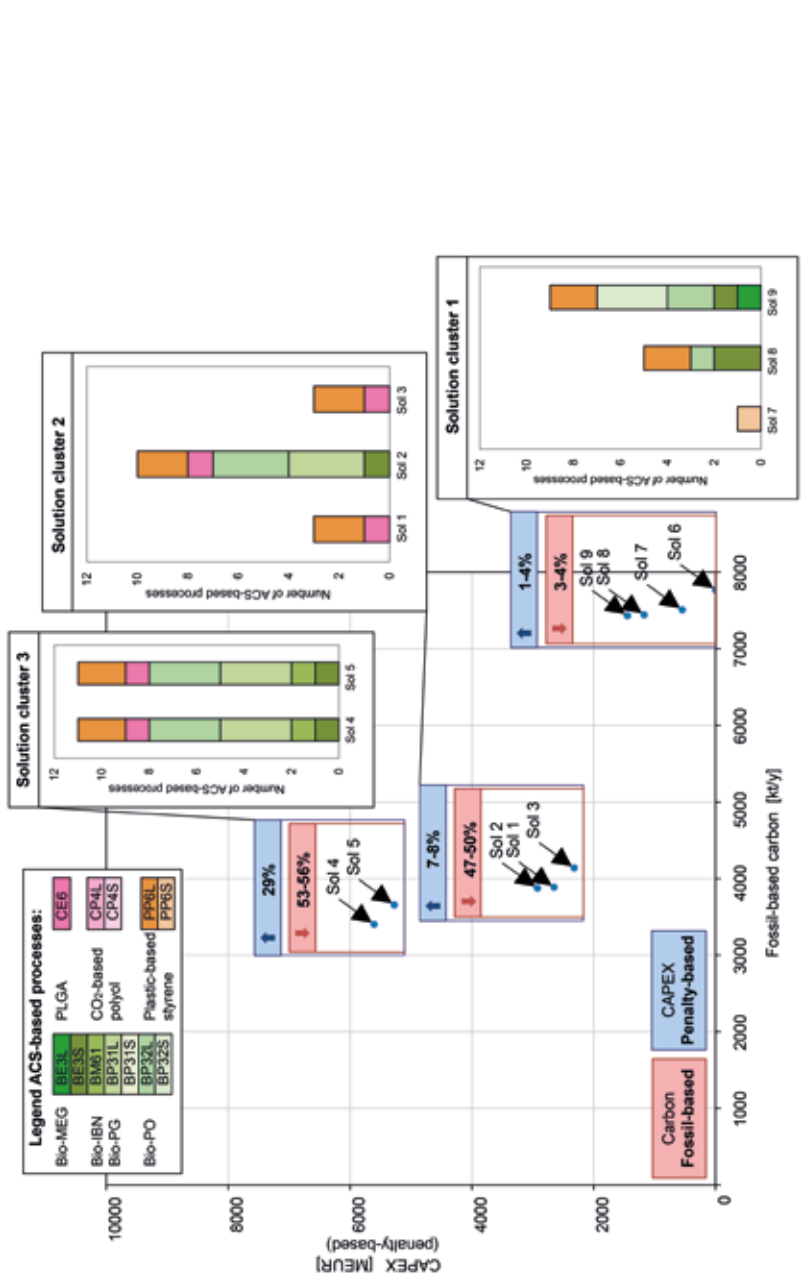

Figure 2. Pareto front of the optimisation. The portfolio of the ACS processes for each solution is presented in bar charts, for further information, check Appendix D, Table D.3. The bar charts show the processes that use biomass (green), CO_2 (pink), and plastic waste (orange). For details on the processes, see Appendix D. Solution 6 is excluded from the bar charts as it corresponds to the fossil-based cluster. Propylene oxide (PO), Ethylene glycol (MEG), Propylene glycol (PG); Isobutene (IBN); Poly(lactic-co-glycolic) acid (PLGA).

3.1.2 Analysis of the solutions and deployment stages for selected ACS technologies

As indicated earlier, most solutions offer a diversified ACS portfolio, including waste- and CO_2-based processes. Notably, CO_2-based polyol processes are not selected in the presented solutions (see Figure 2), despite their potential to defossilise polyol production up to 38% (see Appendix A, Tables A.1 and A.2 for (CP4) CO_2-based polyol). While bio-PG (BP31S) process was designed to fully utilise glycerol (40 kt/y) from the onsite biodiesel unit, it is never selected by the model. The CAPEX difference between the large and small bio-PG processes is only 3 MEUR; therefore, the model favours larger plants to increase PG production. This is largely because the model prioritises the defossilisation of fossil-based PO instead, which can then be used further to fully defossilise PGME and polyol production (i.e., 62% of fossil carbon comes from PO). This outcome is primarily driven by the weighting of objectives within the model: when greater emphasis is placed on CAPEX minimisation, small-scale options become more attractive and are selected by the model, see Appendix D.

The model is run under unflexible conditions for upstream units, while downstream units remain flexible, allowing them to adjust their production to meet market demand. Therefore, in Solution 7 (Solution cluster 1), the model chooses to defossilise the production of fossil-based styrene by reducing plant capacity and deploying 33 kt/y of ACS styrene production (PP6S). However, in this case, the CAPEX penalty is 547 MEUR at the reduction of 260 kt/y (3%) of fossil-based carbon of the entire cluster. This solution appears only once, and the deployment of the process does not affect the existing interconnections within the cluster (see Appendix D). Therefore, the solution is excluded from further discussion.

Overall, the solutions show a similar selection of key processes at different capacities (see Table 2). Nearly all solutions include the following technologies: plastic waste-to-styrene (PP6L) processes and PLGA (CE6) production (to replace PET), and the bio-MEG process (BE3), which co-produces MEG and PG. Additionally, PP6L and CE6 commonly co-occurred (solutions 1-5). Therefore, these technologies were prioritised as the first three for staged deployment (see Table 2).

An additional, less frequent similarity is the combined deployment of bio-PG (BP31) and/or bio-MEG (BE3) with bio-PO (BP32) processes (solutions 2, 4, 5, 8, and 9). Thus, the combination of bio-PG and bio-PO processes was selected for the fourth stage of the deployment. For the last stage, the bio-IBN process was assigned, as it appeared to be the least frequent (solutions 4 and 5). Note that in this work, the maximum number of deployment stages was limited to five.

Table 2. Frequently selected ACS technologies across solutions and their staged deployment for the impact assessment. Solution numbers are provided to help the reader identify where the same process appears at the Pareto front, Figure 2. For details on the processes, see Appendix A, Tables A.1 and A.2. Propylene oxide (PO), Ethylene glycol (MEG), Polyethylene terephthalate (PET), Styrene (SM), Propylene glycol (PG); Propylene glycol methyl ether (PGME); Isobutene (IBN); Methyl tert-butyl ether (MTBE); Poly(lactic-co-glycolic) acid (PLGA).

ACS process (ID)	Frequency (times)	Solutions	Number of plants (mode)	Staged deployment	
				selected	stage
SM (PP6L)	7	1, 2, 3, 4, 5, 8, and 9	2	+	1
PLGA (CE6)	5	1, 2, 3, 4, and 5	1	+	2
Bio-MEG (BE3S)	5	2, 4, 5, 8, and 9	1	+	3
Bio-PO (BP32L)	5	2, 4, 5, 8, and 9	3	+	4
Bio-PG (BP31L)	3	2, 4, and 5	3	+	4
Bio-IBN (BM61)	2	4 and 5	1	+	5
SM (PP6S)	1	7	1	-	-
Bio-MEG (BE3L)	1	9	1	-	-
Bio-PO (BP32S)	1	9	3	-	-
Bio-PG (BP31S)	0		-	-	-
Polyol (CP4L)	0		-	-	-
Polyol (CP4S)	0		-	-	-

3.2 Understanding changes in the cluster's layout and performance

Figure 3 presents changes in the existing cluster's layout after sequential deployment (i.e., in stages) of the most frequent ACS processes, see Table 2. Figure 3 aggregates results from the Appendix D, which represent the new cluster's layouts for each solution of the Pareto front, see Figure 2. The fossil-based cluster is depicted in *stage 0*. After each deployment stage, two aspects are assessed: (i) variations in the amount of the chemicals produced within the cluster (see Table 3); and (ii) the cluster's performance, see Table 4 and Table 5. For more details on the number of processes removed and remaining in the cluster, see Appendix D, Table D.2. For more information on the cluster's mass and energy imports and exports, see the Appendix D.

3.2.1 Stage 1 and 2: Plastic waste-to-styrene and PLGA processes

The first change is the replacement of the fossil-based styrene (P6) process (see *stage 1*, Figure 3). This, in turn, results in the removal of the ethylbenzene (E2) process, as it is no longer required for the production of plastic waste-based styrene (PP6L). Both E2 and P6 processes utilised ethylene, propylene, and benzene, primarily supplied from olefins production (O1), and hydrogen from the steam methane reforming (SMR) unit (U1). Therefore, their removal affects the O1 and U1 processes, as fossil-based chemicals are now produced in excess due to the reduced internal demand within the cluster (see *stage 1*, Table 3). The PO co-produced with fossil-based styrene in P6 is no longer available to the market.

In *stage 2* (see Figure 3) PLGA (CE6) is deployed, knocking out the upstream fossil-based processes required in fossil-based PET production, such as terephthalic acid (A3), ethylene oxide (E1), and ethylene glycol (E3). The benzene originally produced by the aromatics (A1) for cyclohexane (A2) and nitrobenzene (N7) processes can now be entirely replaced by benzene previously supplied to E2 from O1 (see Table 3). As a result, A1 is no longer needed, and the model eliminates it from the solutions. The U1 and air separation (ASU) unit (U2) are significantly affected, as hydrogen and oxygen flows previously supplied to A1 and E1 are no longer required and are now produced in excess. Yet, both units remain in the cluster, as their products are used in processes within the chlorine and propylene subclusters.

The removal of A1 significantly reduces the amount of the fossil-based carbon entering the cluster, as A1 accounts for 45% of the cluster's fossil carbon demand (see *stage 0*, Table 4). The removal of A1 also affects feedstock imports into the cluster as pygas and reformate are no longer required (see Appendix D, Table D.4). Note that c.a. 17% of the carbon in the fossil-based cluster is from biomass for biodiesel (B1) and bioethanol (B2) processes. Deploying the plastic waste-to-styrene and PLGA processes increases the percentage of ACS carbon entering the cluster to 40%. Meanwhile, the costs of the ACS feedstocks (i.e., biomass, CO_2) are lower compared to fossil-based ones, resulting in a total of 35% reduction in the cluster's material costs (see Appendix D, Table D.9).

Due to the removal of A1, A3, and E1, chemicals such as p-xylene, o-xylene, terephthalic acid, and ethylene oxide are no longer supplied to the market (see *stage 2*, Table 3). The propylene and ethylene from O1 used in the (removed) processes (P6, E1, and E2) are no longer required to be produced in the cluster. However, the O1 process remains unchanged, as it still generates other co-products for downstream production (i.e., benzene, C4 mix). As in the model, the excess of fossil-based propylene, ethylene, and benzene (83 kt/y) cannot be sold, it is treated as (fossil-based) waste.

The energy flows in the cluster are also significantly impacted, due to the removal of fossil-based processes, resulting in more than 80% reduction in low-pressure (LPS), medium-pressure (MPS), and high-pressure (HPS) steam (see Appendix D, Table D.5). Although the PLGA process requires electricity (4 PJ/y) for oxalic acid production via electrolysis, the total cluster demand for electricity remains 10% lower than that of the fossil-based cluster. In addition, there is a lower (5%) use of natural gas (i.e., for internal heat generation), and a slight increase (7%) in the cluster's very low-pressure (LLPS) steam, mainly due to the integration of ACS processes with higher LLPS needs. Yet, the total energy costs are 25% lower than those of the fossil-based cluster, primarily due to the removed processes (see Appendix D, Table D.9).

As discussed before, there is a significant shift in the energy profiles and amounts of products, utilities, and waste streams generated from the cluster (see Appendix D, Tables

D.5 and D.8). While the final quantities of DD remain unchanged, some of the products that were previously co-produced and sent to the market are no longer generated (e.g., PO, o-xylene, p-xylene). This results in a reduction of the total cluster's revenue by 25% (see then Appendix D, Table D.9). Despite this, for *stages 1+2*, the revenue from the energy streams is 95% higher compared to the fossil-based cluster. This is in part due to the plastic waste-to-styrene processes, which produce and export excess HPS and MPS. This also results from the energy previously supplied to removed processes (e.g., A1) from utility generation units, which is now no longer consumed within the cluster. Assuming no present demand for the fossil-based chemicals produced in excess, their corresponding waste treatment costs would equal 178 MEUR/y. The OPEX (see *stage 1+2*, Table 4), however, would remain 27% lower than for the fossil-based cluster due to the combined reduction in material and energy costs.

Stage 0

Fossil-based cluster

Solution 6

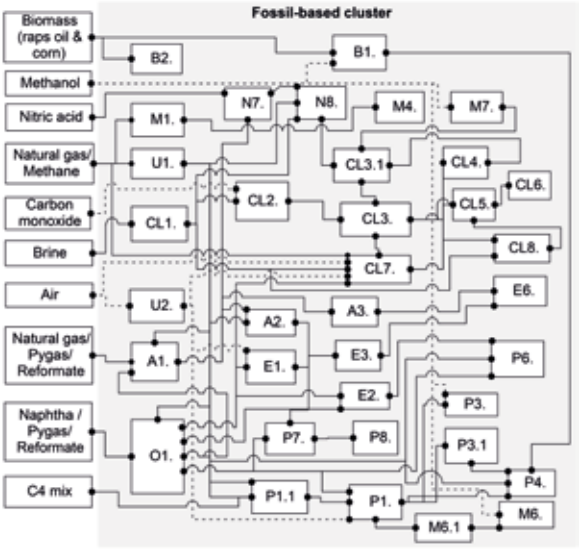

Stage 1

2 waste-to-styrene (PPL6)

Solution 1 - 5, 8, and 9

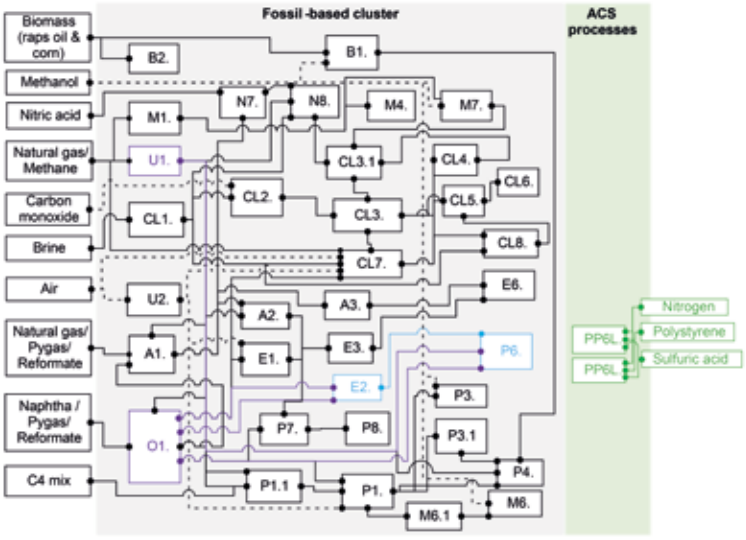

Figure 3. Mapping of changes inside the representative cluster after sequentially integrating ACS-based processes, based on the integration stages from the Table 2. Solution numbers are provided to help the reader identify where the same configuration of processes appears at the Pareto front, see Figure 2. The figure illustrates the processes/streams that would disappear (in blue), those that remain but are affected (in purple), and the new ones (in green).

Stage 2

CO_2-based PLGA (CE6)

Solution 1 - 5

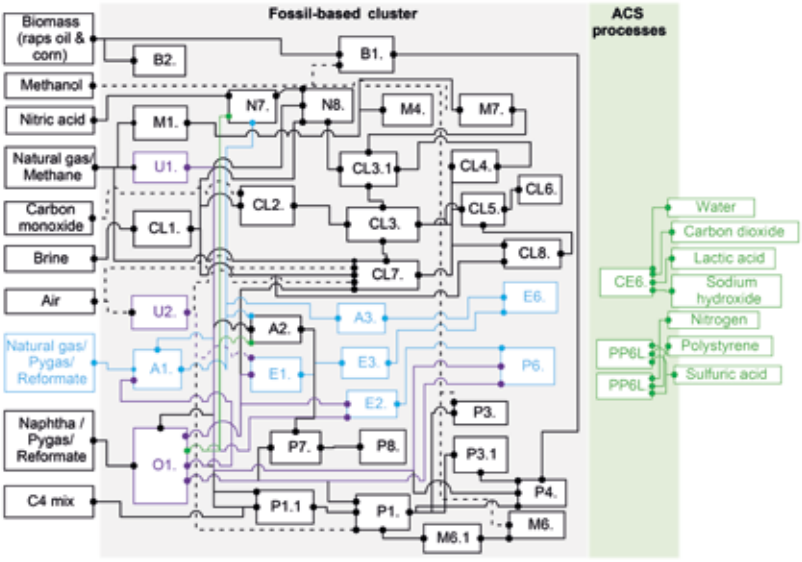

Stage 3

bio-MEG (BE3S)

Solution 2, 4, 5, 8, and 9

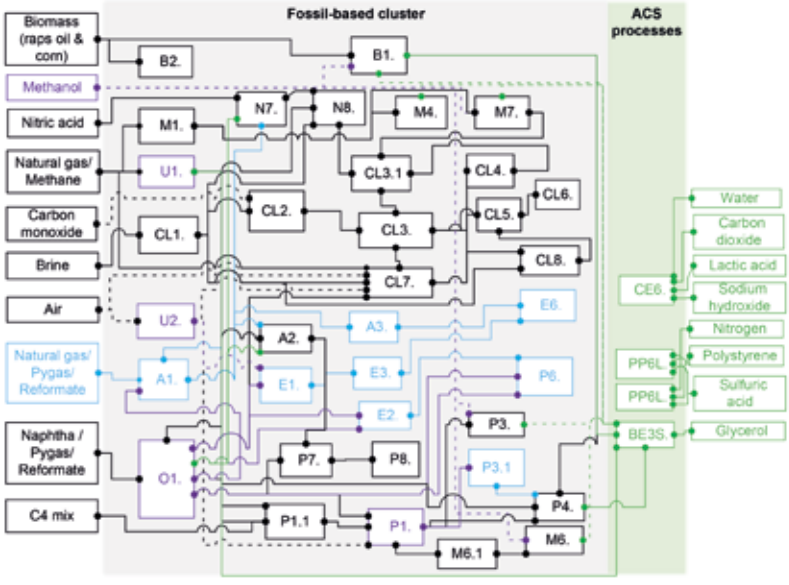

Figure 3. Mapping of changes inside the representative cluster after sequentially integrating ACS-based processes, based on the integration stages from the Table 2. (Continued)

Stage 4

3 bio-PG (BP31L); 3 bio-PO (BP32L)

Solution 2, 4, and 5

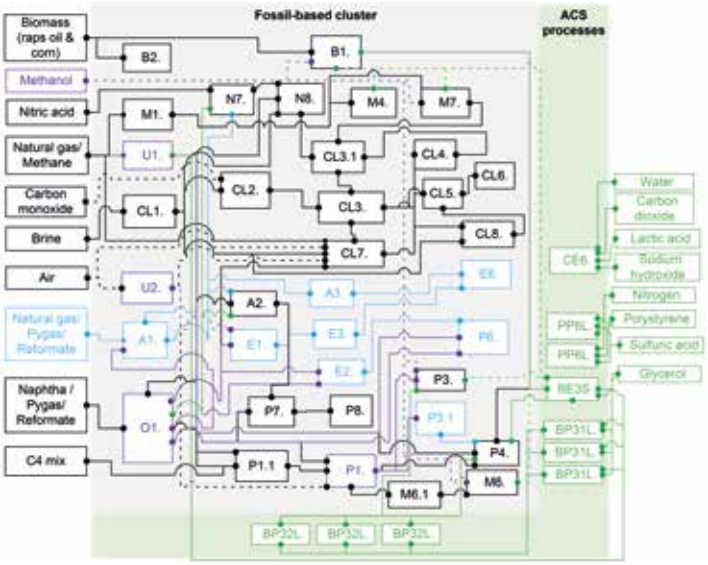

Stage 5

bio-isobutene (BM61)

Solution 4 and 5

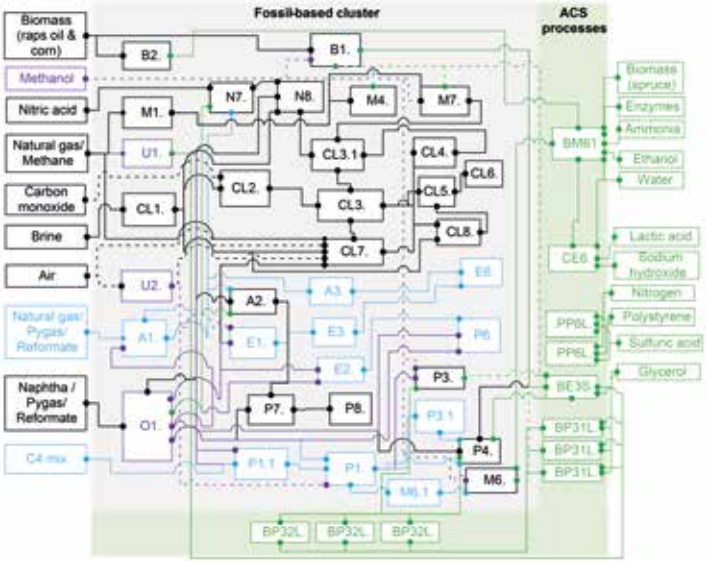

Figure 3. Mapping of changes inside the representative cluster after sequentially integrating ACS-based processes, based on the integration stages from the Table 2. (Continued)

Table 3. Changes in the material streams inside the representative fossil-based cluster for stages 1 – 5, based on Figure 3.

Stage	Material stream	From process (ID)	To process (ID)	Amount, kt/y	Material stream reduction with respect to the fossil-based cluster (stage 0)
1	Propylene oxide	Styrene / PO (P6)	Market	290	100%
	Hydrogen	SMR unit (U1)	Styrene/ PO (P6)	4	4%
	Propylene	Olefins (O1)	Styrene/ PO (P6)	245	49%
	Ethylene		Ethylbenzene (E2)	210	24%
	Benzene		Ethylbenzene (E2)	587	85%
2	Benzene	Aromatics (A1)	Cyclohexane (A2)	254	100%
			Nitrobenzene (N7)	250	100%
	P-xylene		Market	493	100%
	O-xylene		Market	180	100%
	Terephthalic acid	Terephthalic acid (A3)	Market	145	100%
	Ethylene oxide	Ethylene oxide (E1)	Market	197	100%
	Ethylene	Olefins (O1)	Ethylene oxide (E1)	269	55%
	Benzene		Cyclohexane (A2)	254	100%
			Nitrobenzene (N7)	250	-
	Heavy fractions (C7+)		Aromatics (A1)	279	-
	Hydrogen	SMR unit (U1)	Aromatics (A1)	28	32%
	Oxygen	ASU unit (U2)	Ethylene oxide (E1)	308	22%
3	Propylene glycol	PG (P3.1)	Polyol (P4)	0.5	100%
	Propylene oxide	PO/TBA (P1)	PG (P3.1)	68	28%
	Hydrogen	SMR unit (U1)	Bio-MEG (BE3S)	4	-
	Methanol	Bio-MEG (BE3S)	MTBE (M6)	18	-
			PGME (P3)		-
			DME (M4)		-
			Formaldehyde (M7)		-
			Biodiesel (B1)		-
	Propylene glycol	Bio-MEG (BE3S)	Polyol (P4)	0.5	-

Table 3. Changes in the material streams inside the representative fossil-based cluster for stages 1 – 5, based on Figure 3. (Continued)

Stage	Material stream	From process (ID)	To process (ID)	Amount, kt/y	Material stream reduction with respect to the fossil-based cluster (stage 0)
4	Hydrogen	SMR unit (U1)	Bio-PG (BP31L)	9	-
	Glycerol	Biodiesel (B1)	Bio-MEG (BE3S)	40	-
			Bio-PG (BP31L)		-
	Methanol	Bio-PG (BP31L)	MTBE (M6)	4	-
			PGME (P3)		-
			DME (M4)		-
			Formaldehyde (M7)		-
			Biodiesel (B1)		-
	Propylene glycol	Bio-MEG (BE3S)	Polyol (P4)	80	-
			Bio-PO (BP32L)		-
			Market		-
		Bio-PG (BP31L)	Polyol (P4)	240	-
			Bio-PO (BP32L)		-
			Market		-
	Propylene oxide	Bio-PO (BP32L)	PGME (P3)	180	-
			Polyol (P4)		-
			Market		-
5	C4mix	Olefins (O1)	C4 isomerisation (P1.1)	93	100%
	Propylene		PO/TBA (P1)	190	87%
	Hydrogen	SMR unit (U1)	C4 isomerisation (P1.1)	1	20%
	Oxygen	ASU unit (U2)	PO/TBA (P1)	265	41%
	Propylene oxide	PO/TBA (P1)	Market	40	100%
	Tert-butyl alcohol		Market	100	100%
	Waste fuel	C4 isomerisation (P1.1)	Waste fuel boilers (U6)	28	-
		PO/TBA (P1)		53	-
	Ethanol	Bioethanol (B2)	Bio-IBN (BM61)	9.5	-
	Isobutene	Bio-IBN (BM61)	MTBE (M6)	263	-
	Carbon dioxide		PLGA (CE6)	358	-

Table 4. Key performance indicators for the deployment stages 1-5. Solution numbers are provided to help the reader identify where the same configuration of processes appears at the Pareto front, see Figure 2. The table shows colour variation in KPIs compared to the ones of the fossil-based cluster:

(i) increment: 0-20%; 20-40%; 40-60%; 60-100%; >100%; and
(ii) decrement: 0-20%; 20-40%; 40-60%; 60-100%; >100%.

		Stage 0	Stage 1+2		Stage 3+4	Stage 5	
KPI	**Unit**	**Fossil-based cluster**	**without U1**	**with U1**	**without U1**	**without U1**	**with U1**
		Solution 6	**Solution 1**	**Solution 3**	**Solution 2**	**Solution 4**	**Solution 5**
C_{fossil}	kt/y	7,767	3,886	4,139	3,874	3,403	3,656
C_{total}	kt/y	9,361	6,480	6,733	6,632	8,032	8,285
CAPEX	MEUR	11,991	12,801	12,801	12,979	15,409	15,409
OPEX	MEUR/y	12,574	9,263	9,294	9,754	11,484	11,505
TWC	Mt/y	79	63	63	63	97	97
TL*	m^2	10,521	11,495	11,495	12,000	16,145	16,145
$CO_2^{scope\ 1}$	kt CO_2	11,470	10,751	11,680	10,655	10,479	11,408
$CO_2^{scope\ 2**}$	kt CO_2	7,860	4,979	4,445	5,060	8,543	8,087
CO_2^{total}	kt CO_2	19,331	15,730	16,125	15,716	19,022	19,495

*The indicator only looks at equipment footprint and does not account for any land use outside the system boundaries.
**Assuming the current energy mix of the industrial steam production (see Appendix A, Table A.4).

The results show an increase in the cluster's CAPEX and total land requirements (TL) (see *stage 1+2*, Table 4). The CAPEX penalty is about 8% of the fossil-based cluster's CAPEX, and the TL is about 9%. Although the change is relatively small, in an already congested cluster, this is likely to have significant impacts and raise questions about where the new process can be placed.

Finally, total water consumption (TWC) of the defossilised cluster is c.a. 20% lower as it uses less process water and steam than the fossil-based one (see *stage 1+2*, Table 4). The total CO_2 emissions are 19% lower, mainly due to reduced utility use in the cluster (Scope 2). Note that if the utilities were defossilised (see Appendix A, Table A.4), total CO_2 emissions would be further reduced to 42%.

3.2.2 Stage 3 and 4: Bio-MEG, -PG, and -PO

The deployment of bio-MEG (BE3S) in *stage 3*, Figure 3, modifies the interconnections between processes compared to *stage 2*. The Bio-MEG process enables the model to meet the market demand for PG, allowing for the removal of fossil-based PG production (P3.1). Consequently, PO, previously supplied from the PO/TBA process (P1) for PG production, is no longer needed (see *stage 3*, Table 3). Although BE3S reuses glycerol from biodiesel production (B1), it still requires an additional 110 kt/y of glycerol from external sources. In *stage 4*, the introduction of three bio-PG (BP31L) processes further increases glycerol

imports to 420 kt/y (see Appendix D, Table D.4). In the Netherlands, domestic glycerol production together with imports currently amounts to 674 kt/y [23,24]. Although the required amount in this study would be below the total glycerol supply in the Netherlands, the fact that the proposed processes would use around 60% of it raises concerns about availability and requires further study.

The combined integration of BE3S and BP31L significantly boosts bio-MEG exports to levels c.a. 7 times higher than those of the fossil-based cluster (see Appendix D, Table D.6). This surplus is due to the substitution of PET with PLGA, which does not require MEG, resulting in an excess of MEG in the cluster. Additionally, methanol (MeOH) produced from bio-PG and MEG processes could be used internally (see *stage 4*, Table 3), reducing the need for fossil-based MeOH by about 10% (see Appendix D, Table D.4).

The further deployment of bio-PO processes (BP32L) (see *stage 4*, Figure 3) does not affect the existing interconnections within the cluster, but introduces new material flows compared to *stage 3*. The fossil-based PO/TBA process (P1) remains in the cluster, as TBA is still required for isobutene production (M6.1). Since PO is co-produced with TBA, fossil-based PO continues to be generated. Both fossil-based and bio-PO are now used within the cluster for polyol (P4) and PGME (P3) production and to meet market demand (see Appendix D, Table D.6).

Because the layout of upstream processes within the cluster remains unchanged, the amount of fossil-based carbon entering the cluster in *stage 4* is similar to *stage 2* (see *stages 1+2 and 3+4*, Table 4). However, slight differences in energy and materials imports are observed (see Appendix D, Table D.9). The costs for feedstocks are 8% higher than in *stage 2*. This is due to the additional demand for glycerol from external sources. Energy costs rise slightly (4%), driven by the higher requirements of bio-processes: 10% more cooling water and 18% more LLPS (see Appendix D, Table D.5). These changes result in a 4% rise in OPEX, compared to *stage 2* (see *stages 1+2 and 3+4*, Table 4). Since there are no additional changes in the upstream units, the waste treatment costs associated with the fossil-based chemicals remain unchanged from those in *stage 2* (see Section 3.2.1).

Compared to *stage 2, in stage 4*, there are differences in the investments and bare land requirements of the cluster (TL) (see *stages 1+2 and 3+4*, Table 4). Revenue from energy streams is similar to *stage 2*, while revenue from exported products slightly increased (441 MEUR/y). This increase is partly due to the new byproducts produced from the integrated processes and partly due to the model's requirement to fulfil PO demand. However, PO produced in excess is a mix of fossil-based and ACS. Therefore, if the market would not accept fossil-based products, it remains uncertain whether this surplus of PO could be sold.

The deployed bio-processes do not require additional process water and have no direct process emissions (see Appendix A, Tables A.1 and A.2). Therefore, TWC and Scope 1 CO_2 emissions remain similar to *stage 2*. The slight increase in energy imports results in a less than 2% rise in Scope 2 emissions compared to *stage 2* (see *stages 1+2 and 3+4*, Table 4).

3.2.3 Stage 5: Bio-IBN process

In the final stage, *stage 5* (see Figure 3) a bio-isobutene (bio-IBN) process (BM61) for bio-MTBE production is added to the cluster. In combination with the bio-PO (BP32L) processes, this eliminates the need for fossil-based C4 isomerisation (P1.1) and PO/TBA (P1) production; therefore, the propylene and C4 mix from the olefin production (O1) are not utilised, and TBA from P1 is no longer supplied to the market (see *stage 5*, Table 3). Although O1 remains part of the cluster, it is significantly affected, as most of its products (i.e., propylene, ethylene, C4 mix, benzene) are no longer fully or partially required in downstream production. Ethanol from bioethanol production (B2) is now internally used in the BM61 process (see *stage 5*, Table 3).

In the fossil-based cluster, the C4 isomerisation process relies on market-sourced C4 mix (483 kt/y). Its removal reduces imports of C4 mix (see Appendix D, Table D.4), resulting in 3% less fossil-based carbon entering the cluster compared to *stage 4* (see *stages 3+4 and 5*, Table 4). Although the integrated BM61 process requires c.a. 2,000 kt/y of ACS carbon, the total carbon in the defossilised cluster remains 12% lower than in the fossil-based cluster.

The BM61 is an intensive process in terms of material, energy, and equipment (for further details, we refer to our previous work [19]). Compared to *stage 4*, its integration enlarges the cluster, drastically changing its performance (see *stages 3+4 and 5*, Table 4). BM61 requires a significant amount of cooling water and electricity, increasing cluster demand by factors of 1.5 and 2.8, respectively. The main energy demand in the bio-IBN process comes from the recovery columns for ethanol–water separation, accounting for up to 87% of the total energy use. As a result, energy costs rise by 1.3 and 1.6 times compared to the fossil-based and cluster at *stage 4* (see Appendix D, Table D.9). Although additional ACS feedstocks are needed (see Appendix D, Table D.4), their lower costs result in a 30% reduction in material costs (see Appendix D, Table D.9).

BM61 also generates new by-products (CO_2, n-butenes, and furfural), which can be used internally or sold. However, their combined value is lower than the removed fossil-based TBA, resulting in a revenue drop of 40 MEUR/y for the cluster compared to *stage 4* (see Appendix D, Table D.9). Despite its energy intensity, BM61 has an on-site heat generation unit that runs on bio-residues, meeting its steam requirements and supplying excess steam to the market. This results in 16% higher utility revenue than in *stage 4*. Since O1 remains operational and production volumes are unchanged, excess fossil-based chemicals are produced in larger quantities than in *stage 4*. Without a market for these fossil-based

chemicals, their surplus would result in an additional 36 MEUR/y in waste treatment costs. As a result, OPEX of *stage 5* is 14% higher than in *stage 4*, but still 9% lower than in the fossil-based case (see *stage 0*, *3+4 and 5*, Table 4).

The CAPEX for BM61 is c.a. 2,500 MEUR, raising the cluster's total CAPEX by 25% compared to *stage 4* (see *stages 3+4 and 5*, Table 4). As part of the bio-MTBE process, BM61 expands the cluster's land footprint by only 3% compared to *stage 4*. High requirements in the process and cooling water result in a 23% increase in TWC compared to the fossil-based cluster. The BM61 requirements for electricity directly drive Scope 2 emissions and are 3 Mt CO_2/y higher compared to *stage 4* (see *stages 3+4 and 5*, Table 4). Note that it is possible to reduce up to 92% of Scope 2 CO_2 emissions if defossilised utilities were used (see Appendix A, Table A.4).

3.2.4 Cascading impacts on the utility units

Solutions 1 and 3 (*stage 1+2*), 4 and 5 (*stage 5*) have the same portfolio of ACS technologies (see Figure 2). However, the removed processes within the representative cluster differ across these solutions, see Appendix D, Table D.2. In Solutions 1 and 4, the steam methane reforming (U1) is removed, and hydrogen is imported (c.a. 50 kt/y, see Appendix D, Table D.4), whereas solutions 3 and 5 retain the U1 within the cluster (see Appendix D, Table D.2).

The impact of removing U1 on the cluster's CAPEX is relatively minor compared to the removal of chemical processes (see *stages 1+2 and 5* with and without U1, Table 4). However, it led to a significant reduction in the OPEX of about 30 MEUR/y. Moreover, removing U1 decreases natural gas imports by 440 kt/y, resulting in a lower amount of both fossil-based carbon input and CO_2 emissions within the cluster (see Table 4). This shift from on-site to off-site hydrogen production stresses the importance of considering defossilised hydrogen production. The air separation unit (U2) remains part of the cluster in all solutions. However, the demand for oxygen from downstream processes is reduced by up to 41%, raising questions about whether U2 should maintain its current production levels or scale them down accordingly.

Another change in the utility units is the removal of waste-fired boilers (U6), which are located on-site within the propylene subcluster (see Appendix D, Table D.2). In this subcluster, waste fuel from P1.1 and P1 processes is sent to U6 boilers, which generate LLPS used internally. The deployment of ACS processes impacts the production rates of the processes in the subcluster, thereby affecting their LLPS requirements. As a result, most solutions eliminate one of the U6 units.

3.2.5 Effects of variations in the processes

Solutions 8 and 9 (Solution cluster 1, see Figure 2) do not include the PLGA process, and the mix and number of bio-processes vary from those in Solution clusters 2 and 3 (see Appendix D, Table D.3). In both solutions 8 and 9, Figure 4, the PET process (E6) remains

unchanged as bio-MEG is produced to match PET demand. However, fossil-based upstream processes, such as ethylene glycol (E3) and ethylene oxide (E1), are no longer required and have been removed from the cluster. As a result, ethylene and benzene, previously consumed in these removed processes, are now produced in excess (refer to *stages 1+2* in Table 3). Due to the changes downstream, both aromatics (A1) and olefins (O1) productions are affected, but processes remain unchanged, as they are required to produce other chemicals for downstream production. In both solutions, hydrogen is sourced externally from the market. Glycerol requirements differ significantly between solutions: 263 kt/y and 594 kt/y are required for solutions 8 and 9, respectively. The bio-PO and MeOH produced within the cluster could be used internally, enabling the defossilisation of polyol and PGME. This internal substitution reduces fossil-based MeOH import by 25%.

In both solutions 8 and 9 (see Table 5), the change in the fossil-based carbon used is minor compared to the fossil-based cluster, and is driven by reductions in natural gas and fossil-based methanol consumption (see Appendix D, Table D.4). Overall, the total inlet carbon increased by 8%, with 30% being from the ACS. Steam requirements in the new cluster are higher in both solutions than those in the fossil-based cluster (see Appendix D, Table D.5). However, the increase remains modest, generally not exceeding 10%. A 30% decrease in the cluster's MPS is also observed, as excess MPS produced by new processes is reused internally (see Appendix D, Table D.8). Although the new processes require c.a. 4.5 PJ/y more cooling water, the overall cluster requires 10% less cooling water due to the removal of E1, E3, and P6 processes.

Feedstock import costs for both solutions are 10% higher than those of the fossil-based cluster. In comparison, energy costs are 8% lower, and can offset 30% of the material costs of the cluster (see Appendix D, Table D.9). Due to the removed processes, product revenue is 3% lower than that of the fossil-based cluster. However, the revenue from the energy excess is on average 50% higher (see Appendix D, Table D.9). The CAPEX and TL of the two solutions are similar, and they are approximately 10% and 12% higher, respectively, compared to the fossil-based cluster (see Table 5).

The reduction in TWC is mainly due to the removal of fossil-based processes, as the deployed bio-processes do not require additional process water. Compared to the fossil-based cluster (see Table 5), the total CO_2 emissions are c.a. 5% lower due to the lower Scope 2 CO_2 emissions. Note that if defossilised utilities were employed (see Appendix A, Table A.4), both solutions would have 40% lower total CO_2 emissions.

Solution 8
2 waste-to-styrene (PPL6);
2 bio-MEG (BE3S); 1 bio-PO (BP32L)

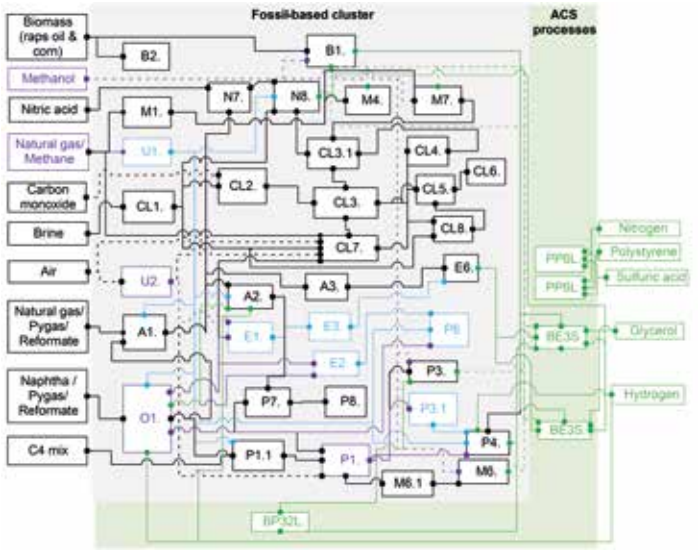

Solution 9
2 waste-to-styrene (PPL6);
2 bio-MEG (BE3L and BE3S); 5 bio-PO (BP32L and BP32S)

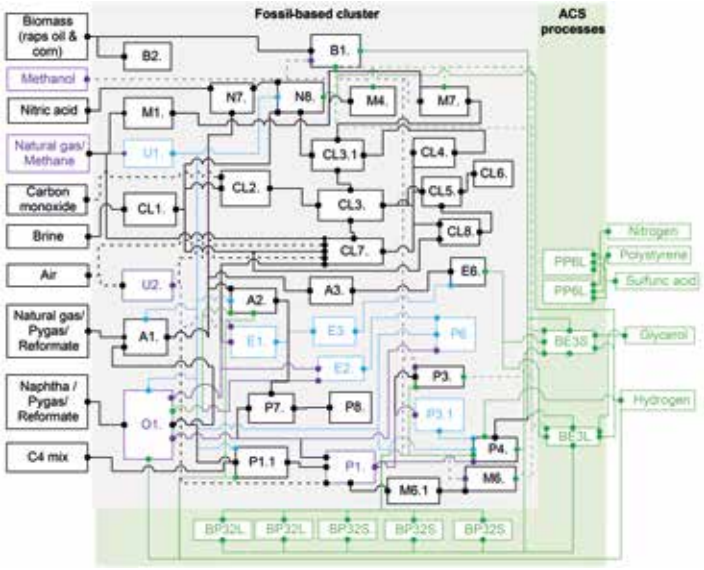

Figure 4. Mapping of changes inside the representative cluster after integrating the ACS-based processes for solutions 8 and 9. The figure illustrates the processes/streams that would disappear (in blue), those that remain but are affected (in purple), and the new ones (in green).

Table 5. Key performance indicators for solutions 8 and 9. The table shows colour variation in KPIs compared to the ones of the fossil-based cluster:

(i) increment: 0-20%; 20-40%; 40-60%; 60-100%; >100%; and

(ii) decrement: 0-20%; 20-40%; 40-60%; 60-100%; >100%.

KPI	Unit	Solution 6 Fossil-based cluster	Sol 8	Sol 9
			without U1	without U1
C_{fossil}	kt/y	7,767	7,442	7,430
C_{total}	kt/y	9,361	10,040	10,164
CAPEX	MEUR	11,991	12,391	12,479
OPEX	MEUR/y	12,574	13,325	13,671
TWC	Mt/y	79	75	75
TL*	m^2	10,521	11,579	11,816
$CO_2^{scope\ 1}$	kt CO_2	11,470	11,013	10,832
$CO_2^{scope\ 2**}$	kt CO_2	7,860	7,596	7,414
CO_2^{total}	kt CO_2	19,331	18,608	18,247

*The indicator only looks at equipment footprint and does not account for any land use outside the system boundaries.

**Assuming the current energy mix of the industrial steam production (see Appendix A, Table A.4).

3.3 Limitations of the current study

In this work, every process was considered to be a part of one integrated whole – a representative cluster. In practice, clusters are comprised of multiple independent companies (e.g., large, diversified and smaller, specialised producers), often located at different sites within the cluster, see Figure 5 (a) and (b). Consequently, the cascading impacts observed in this study may differ depending on the decision-maker (i.e., the company). The latter ones would face several strategic decisions: (i) reducing/adapting its production; (ii) identifying alternative applications for the chemical (such as internal use or selling); (iii) considering the surplus as a waste; or (iv) changing its product portfolio. However, the behaviour patterns of actors across the value chain were not accounted for in the current work's optimisation model. Therefore, improvements to the model could be made to include agent-based modelling.

An important assumption was that excess fossil-based chemicals could not be sold on the market and therefore are instead treated as waste. This represents a stringent, environmentally driven scenario, where there is no market for fossil-derived products, resulting in waste treatment costs of c.a. 180 MEUR/year, corresponding to ~2% of the OPEX. However, if the fossil-based products could still be sold in the market, this would result in c.a. 880 MEUR/year of additional revenue.

Another aspect that can have an impact on the results is the fact that the physical distances between processes differ and may be significant. While the model has accounted for distance limitations to transfer utilities (i.e., steam), the excess of material flows was set

to be redirected internally without geographical constraints. In reality, companies may be located at different sites within the cluster, see (b), sometimes separated by distances ranging from 5 to 50 km [30]. Redirecting streams poses logistical challenges and requires infrastructure investments. These aspects could influence both the feasibility and cost-effectiveness of transitioning to defossilised production pathways.

Petrochemical clusters are "densely populated" with limited land availability for new processes. For instance, the Port of Rotterdam struggles to secure additional space for the upcoming projects, especially within the existing port and industrial zones [25,26]. Thus, replacing fossil-based processes with ACS ones could be an additional challenge for existing clusters, which should be further analysed.

The system boundary for CO_2 accounting was limited to Scope 1 and Scope 2 emissions, while Scope 3 was excluded. The bio-IBN process requires c.a 4,159 kt/y of spruce biomass (Appendix D, Table D.4), while the bio-based processes in *stages 3+4*, see Section 3.2.2, use up to 420 kt/y of glycerol. According to [27], this would correspond to c.a. 180 and 1,165 kt $CO_{2\text{-eq}}$ of upstream emissions, respectively. These values indicate that emissions from feedstock production and cultivation are substantial. Further research can expand the system boundaries of the study to understand potential shifting of emissions between Scopes.

Last but not least, the compatibility of ACS substitutes with the applications or uses of their fossil-based counterparts should be further investigated. For instance, in this study, it was assumed that PLGA can fully substitute PET based on the literature [22,28]. However, the long-term stability of PLGA needs to be tested under real-world conditions. The performance of the ACS DDs to substitute one-on-one their fossil-based counterparts requires further verification. Moreover, the current study assumed ACS chemicals would be produced at the same purity as fossil-based chemicals. However, the traces of impurities in the ACS chemicals differ. These variations may result in the distinct characteristics of products or chemicals produced from ACS chemicals.

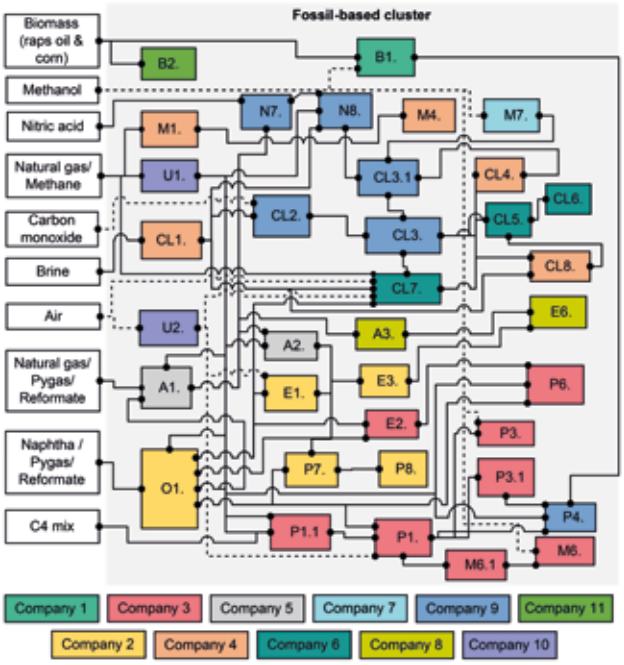

(a)

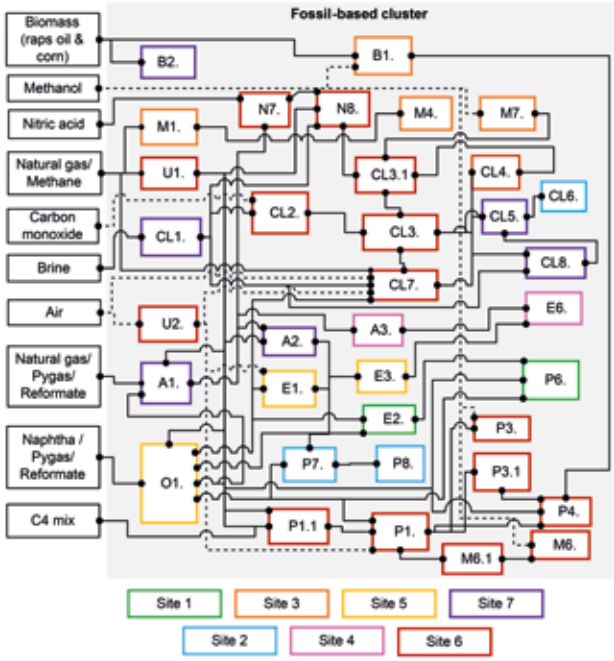

(b)

Figure 5. A schematic representation of representative cluster locating (a) companies and (b) sites. For more details, refer to [18,29,30].

4. CONCLUSIONS

This study investigated the cascading impacts of deploying ACS-based processes for downstream derivatives production within a petrochemical cluster. The analysis is conducted using an in-house model of a representative petrochemical cluster built in Aspen Plus v12. The study employs a superstructure-based optimisation model that allows analysis of the impact of the sequential deployment of ACS-based processes within the existing cluster configuration. The optimisation objectives are defined to minimise both fossil-based carbon entering the cluster and additional capital investment (CAPEX), prioritising defossilisation of the cluster over CAPEX.

The current cluster configuration and the selection of processes among the proposed ACS-based technologies (using CO_2, biomass of plastic waste as feedstock) demonstrate the potential of ACS processes for DDs production of six chemicals to reduce the total fossil-based carbon in the cluster by 50%, while requiring an estimated 30% increase in CAPEX compared to the original cluster. The results highlight the need of integrating multiple ACS to achieve a significant defossilisation at the cluster level. In contrast, targeting individual DD processes in isolation is insufficient.

Interestingly, the optimisation results do not reveal a clear preference for either the direct or indirect ACS process routes for defossilising DDs. While biomass remains the dominant feedstock for most ACS-based DDs, the results indicate the importance of a diversified feedstock portfolio to achieve higher levels of defossilisation. The five most frequently selected processes include plastic waste-to-styrene, PLGA in place of PET, bio-MEG, bio-PG, and bio-PO.

The analysis of cascading impacts shows that effective defossilisation requires careful consideration of the layout and interconnectivity of each DD value chain within the cluster. For instance, combining waste-to-styrene and PLGA processes eliminates 20% of the processes in the cluster, including the aromatics (A1) plant. Additionally, the integration of bio-MEG, bio-PG, bio-PO, and bio-MTBE will significantly restructure the propylene subcluster, removing four key processes: C4 isomerisation (P1.1), PO/TBA (P1), PG (P3.1), and isobutene (M6.1). These changes lead to significant shifts in both material and energy-related costs and revenues at the plant and cluster levels.

The removal of fossil-based downstream processes heavily affects olefins (O1) production, as over two-thirds of its outputs are no longer required. Furthermore, utility units such as the SMR (U1) and the ASU (U2) were similarly affected, with output reductions of c.a. 40%. This raises questions about the need to integrate the excess flows into the cluster, maintain current production levels, or scale production down.

Strategic selection and integration of ACS technologies are thus essential, along with a thorough understanding of the structural changes they cause. Moreover, it is important to assess the availability of ACS feedstocks and the limitations imposed by land constraints in existing industrial clusters. Finally, the potential reuse of equipment and infrastructure from decommissioned fossil-based processes should be assessed in more detail.

SUPPLEMENTARY DATA

Supplementary data for Chapter 4 can be found in Appendixes A and D.

5. REFERENCES

(1) EEA. *Total greenhouse gas emissions in the chemical industry (Indicator)*. Chart (Interactive). https://www.eea.europa.eu/en/european-zero-pollution-dashboards/indicators/total-greenhouse-gas-emissions-in-the-chemical-industry?activeTab=658e2886-cfbf-4c2f-a603-061e1627a515 (accessed 2025-04-08).

(2) EC. *Chemicals Strategy for Sustainability towards a Toxic-Free Environment*; Brussels, 2020.

(3) IEA. *Chemicals*; Paris, 2022. https://www.iea.org/reports/chemicals.

(4) IEA. *Chemicals*. https://www.iea.org/energy-system/industry/chemicals (accessed 2025-04-08).

(5) van den Oever, M.; Molenveld, K.; van der Zee, M.; Bos, H. *Bio-based Plastics 2020*; Wageningen, 2020. https://doi.org/https://doi.org/10.18174/534587.

(6) Carus, M.; Dammer, L.; Raschka, A.; Skoczinski, P.; Vom Berg, C. *Renewable Carbon – Key to a Sustainable and Future-Oriented Chemical and Plastic Industry*; Hürth, Germany, 2020. www.bio-based.eu/nova-papers.

(7) Avantium. *Portfolio of Technology Platforms and Products*. https://avantium.com/products-technologies.

(8) Corbion. *Bioplastic products*. https://www.corbion.com/products/bioplastic-products.

(9) Covestro. Products. **2025**.

(10) Yong Min Fen, C. Deep Decarbonisation of the Dutch Chemical Industry: A Marginal Abatement Cost Curve Analysis for LyondellBasell. **2020**, No. August.

(11) Boix, M.; Montastruc, L.; Azzaro-Pantel, C.; Domenech, S. Optimization Methods Applied to the Design of Eco-Industrial Parks: A Literature Review. *J. Clean. Prod.* **2015**, *87*, 303–317. https://doi.org/10.1016/j.jclepro.2014.09.032.

(12) Valenzuela-Venegas, G.; Vera-Hofmann, G.; Díaz-Alvarado, F. A. Design of Sustainable and Resilient Eco-Industrial Parks: Planning the Flows Integration Network through Multi-Objective Optimization. *J. Clean. Prod.* **2020**, *243*, 118610. https://doi.org/10.1016/j.jclepro.2019.118610.

(13) Jog, S.; Medrano-García, J. D.; Vázquez, D.; Guillén-Gosálbez, G. Multi-Objective Optimization of a Hybrid Fossil/Renewable Carbon Methanol Cluster. *ACS Sustain. Chem. Eng.* **2025**, *13* (4), 1473–1483. https://doi.org/10.1021/acssuschemeng.4c06566.

(14) Gabrielli, P.; Rosa, L.; Gazzani, M.; Meys, R.; Bardow, A.; Mazzotti, M.; Sansavini, G. Net-Zero Emissions Chemical Industry in a World of Limited Resources. *One Earth* **2023**, *6* (6), 682–704. https://doi.org/10.1016/j.oneear.2023.05.006.

(15) Tiggeloven, J. L. Breaking and Re-Forming the Chemical Industry Optimizing the Transition from Fossil-Based Clusters to Net Zero, Utrecht University, 2025.

(16) Manalal, J. T.; Pérez-Fortes, M.; Ramírez, A. Re-Wiring Petrochemical Clusters: Impact of Using Alternative Carbon Sources for Ethylene Production. *Green Chem.* **2025**, *27* (22), 6641–6659. https://doi.org/10.1039/D4GC06042C.

(17) Stepchuk, I.; Pérez-Fortes, M.; Ramírez, A. From Feedstock to Future Chemicals: Rethinking Carbon Sources in Industrial Propylene Clusters. *ACS Sustain. Chem. Eng.* **2025**, *13* (42), 17869–17880. https://doi.org/10.1021/acssuschemeng.5c05287.

(18) Tan, M.; Ibarra-González, P.; Nikolic, I.; Ramírez Ramírez, A. Understanding the Level of Integration in Existing Chemical Clusters: Case Study in the Port of Rotterdam. *Circ. Econ. Sustain.* **2024**, No. submitted for review. https://doi.org/10.1007/s43615-024-00410-5.

(19) Stepchuk, I.; Pérez-Fortes, M.; Ramírez, A. Assessing Impacts of Deploying Bio-Based Isobutene for MTBE Production in an Existing Petrochemical Cluster. *J. Clean. Prod.* **2025**, *503*, 145114. https://doi.org/10.1016/j.jclepro.2025.145114.

(20) Stepchuk, I.; Pérez-Fortes, M.; Ramírez, A. R. Impacts of Defossilising Downstream Derivatives in Petrochemical Clusters – MTBE Case Study. In *Computer Aided Chemical Engineering*; 2023; Vol. 52, pp 2429–2434. https://doi.org/10.1016/B978-0-443-15274-0.50386-3.

(21) econic technologies. *Pilot scale demonstration of novel CO2 co-polymerisation catalysts in the PU polyol market*. Deliverable D7.4. https://cordis.europa.eu/article/id/240828-better-plastics-through-cleaner-technology (accessed 2025-06-02).
(22) Gonella, S.; Huijbregts, M. A. J.; de Coninck, H.; de Gooyert, V.; Hanssen, S. V. Greenhouse Gas Reduction Potential of Novel CO 2 -Derived Polylactic- Co -Glycolic Acid (PLGA) Plastics. *ACS Sustain. Chem. Eng.* **2025**, *13* (16), 5798–5807. https://doi.org/10.1021/acssuschemeng.4c06463.
(23) Khandelwal, M. *Decarbonisation Options for the Dutch Biofuels Industry*; 2020. www.pbl.nl/en.
(24) World Integrated Trade Solution. *Netherlands Glycerol (glycerine), crude, glycerol waters an imports by country in 2023*. https://wits.worldbank.org/trade/comtrade/en/country/NLD/year/2023/tradeflow/Imports/partner/ALL/product/152010 (accessed 2025-04-30).
(25) Government of the Netherlands. *Rotterdam Mainport development*. https://www.government.nl/topics/maritime-transport-and-seaports/development-of-rotterdam-hub-port#:~:text=The port of Rotterdam makes,parks along the Meuse river. (accessed 2025-06-18).
(26) Witte, P.; Wiegmans, B.; Louw, E. More Claims than Land: Multi-Facetted Land Use Challenges in the Port-City Interface. *J. Transp. Geogr.* **2025**, *124*, 104181. https://doi.org/10.1016/j.jtrangeo.2025.104181.
(27) EcoInvent. *EcoInvent Database*. Wood chips, wet, measured as dry mass {SE}| softwood forestry, spruce, sustainable forest management | Cut-off, S; Glycerine {RER}| market for glycerine | Cut-off, S; IPCC 2021 Global Warming Potential over a 100-year time horizon (GWP100). https://ecoinvent.org/ (accessed 2026-05-04).
(28) Murcia Valderrama, M. A.; van Putten, R.-J.; Gruter, G.-J. M. PLGA Barrier Materials from CO 2 . The Influence of Lactide Co-Monomer on Glycolic Acid Polyesters. *ACS Appl. Polym. Mater.* **2020**, *2* (7), 2706–2718. https://doi.org/10.1021/acsapm.0c00315.
(29) Port of Rotterdam. Facts & Figures on the Rotterdam Energy Port and Petrochemical Cluster. Port of Rotterdam Authority 2016, p 60.
(30) PBL. *MIDDEN: Manufacturing Industry Decarbonisation Data Exchange Network*. https://www.pbl.nl/en/middenweb/project-summary (accessed 2025-06-01).



CHAPTER 5

Effects of operational flexibility, feedstock and land availability on the defossilisation of downstream petrochemical production

ABSTRACT

Defossilising the chemical industry requires employing processes that use alternative carbon sources (ACS). However, while these processes do not demand fossil-based chemicals, they require additional resources, such as land, water, and feedstocks. This chapter examines the effect of changes in feedstock and land availability, and flexibility of upstream units, on the deployment of ACS processes within an existing industrial cluster. The current work utilises the methodology developed in Chapter 4, considering the same cluster's setup and ACS processes. A superstructure-based optimisation model is set to meet two objectives: (i) to reduce fossil carbon usage and (ii) to minimise the CAPEX penalty. Four scenarios are considered in the assessment: (i) inflexible conditions; (ii) operational flexibility; (iii) feedstock availability; and (iv) land availability. The results show that, across all scenarios, c.a. 50% defossilisation of the cluster is achievable, mainly through a mix of ACS processes. Poly(lactic-co-glycolic) acid (PLGA) and waste-to-styrene plants remain consistently selected across scenarios, with their deployment substantially reshaping the cluster and removing major upstream processes involved in their fossil-based production, including aromatics. Adjustments to upstream unit production can support defossilisation efforts, reducing the total amount of fossil-based carbon entering the cluster by up to c.a. 65%. This work stresses the need to consider feedstock and land availability, along with operational flexibility, when assessing ACS process deployment in existing petrochemical clusters.

ABBREVIATIONS:

ACS	Alternative carbon sources
Bio-IBN	Bio-Isobutene
CAPEX	Capital expenditures
CBB	Chemical building blocks
DD	Downstream derivative
FEED	Feedstock availability
FLEX	Operational flexibility scenario
HPS	High-pressure steam
INFLEX	Inflexible conditions scenario
LAND	Land availability scenario
LLPS	Very low-pressure steam
LPS	Low-pressure steam
MPS	Medium-pressure steam
MTBE	Methyl tert-butyl ether
OPEX	Operational expenditures
PET	Polyethene terephthalate
PG	Propylene glycol
PGME	Propylene glycol methyl ether
PLGA	Poly(lactic-co-glycolic) acid
PO	Propylene oxide
PoR	Port of Rotterdam
TBA	Tert-butyl alcohol
TEE	Techno-economic and environmental analyses
TL	Total bare land requirement
TWC	Total water consumption

1. INTRODUCTION

The chemical industry remains one of the largest greenhouse gas (GHG) emitting sectors due to its strong reliance on fossil fuels, for both feedstock and energy consumption [1]. As discussed previously in this thesis, although defossilisation of chemical production is possible, it requires existing chemicals to be produced from alternative carbon sources (ACS) such as biomass, CO_2 or waste. To date, most literature on chemical production from ACS focuses on chemical building blocks (CBB), like methanol, ethanol, ethylene, and propylene [2]. However, the production of ACS-based downstream derivatives (DDs) has also attracted producers, and processes are gradually entering the market [3]. Notably, for both CBBs and DDs, the focus remains on assessing stand-alone ACS processes, assuming they are developed in a greenfield environment [4,5]. However, this assumption overlooks local conditions, where the production of chemicals is highly integrated within petrochemical clusters [6]. In Chapter 4, we examined the structural changes and performance of an industrial cluster following the deployment of ACS processes for defossilising DD. For this, a superstructure-optimisation model was used to assess the potential cascading impacts and trade-offs in the cluster's layout and performance [7]. The model was run under two assumptions: (i) units cannot adjust their production capacities in case of a change in demand (inflexible production) and (ii) unlimited availability of feedstocks and land. For the model run, 52 fossil-based processes and 6 ACS-based processes were considered. Chapter 4 concluded by highlighting the need to explore further the impact of limitations in ACS feedstock, potential land availability, and the units' capacity to adjust production based on downstream demand (operational flexibility) on ACS-technology portfolio selection, defossilisation potential, and the performance of the cluster.

This chapter meets this need by extending the work done in Chapter 4. It aims to address the identified knowledge gaps by evaluating the impact of ACS-based DDs deployment under limited feedstock and land availability, and units' operational flexibility, and comparing the results with existing findings from Chapter 4.

The chapter has two subgoals:

(i) to assess the extent to which an existing chemical cluster can be defossilised by deploying ACS-based DD processes if limitations in the feedstock and land availability and variations in the operational flexibility constraints are considered, and;
(ii) to identify the changes in portfolios of ACS-based DD technologies between scenarios with and without limitations.

2. MATERIALS AND METHODS

The methodology builds upon the methodology presented in Chapter 4, Section 2. It consists of three main steps: defining (i) the scope of the study, (ii) the model scenarios, and (iii) assessing the cluster's performance under each scenario.

2.1 Scope of the study

This chapter utilises the same in-house model of an industrial fossil-based cluster consisting of 52 fossil-based processes modelled in Aspen Plus v12, and a superstructure-based optimisation model developed in Python, as described in Chapter 4. The cluster's model mimics the mass and energy flows of existing processes within the petrochemical cluster in the Port of Rotterdam (PoR) [8]. The six DDs considered for defossilisation were: polyethene terephthalate (PET), methyl tert-butyl ether (MTBE), polyol, propylene glycol methyl ether (PGME), propylene glycol (PG), and styrene (SM) (see Figure 1). For this, a total of nine direct and indirect ACS-based processes were modelled, see Table 1, with capacities and purities of the ACS products equal to those of the fossil-based production in the PoR. The bio-PG and -MEG processes were modelled assuming the use of imported bio-glycerol instead of on-site production. For PET production, PLGA was considered to be a direct substitute [9]. The approach to process modelling is outlined in Chapter 2 of this thesis, while the fossil- and ACS-based models used here (including the design methodology, underlying assumptions, mass and energy balances, and validation) were reported in Chapter 4, Appendix A, Tables A.1 and A.2.

Table 1. Direct and indirect production routes of the ACS-based DDs. Propylene oxide (PO), Ethylene glycol (MEG), Polyethylene terephthalate (PET), Styrene (SM), Propylene glycol (PG); Propylene glycol methyl ether (PGME); Isobutene (IBN); Methyl tert-butyl ether (MTBE); Poly(lactic-co-glycolic) Acid (PLGA).

ACS	Route	Intermediate process(es) (ID)		Final process (ID)
Polystyrene (waste plastic)	Direct	-	-	SM (PP6)
CO_2	Direct	-	-	PLGA (CE6)
	Direct	-	-	CO_2-based polyol (CP4)
Bio-glycerol	Indirect	Bio-MEG (BE3)	-	PET (E6)
	Direct	-	-	Bio-PG (BP3.1)
	Indirect	Bio-MEG (BE3)	Bio-PO (BP3.2)	PG (P3.1)
	Indirect	Bio-MEG (BE3) Bio-PG (BP3.1)	Bio-PO (BP3.2)	Polyol (P4)
	Indirect	Bio-MEG (BE3) Bio-PG (BP3.1)	Bio-PO (BP3.2)	PGME (P3)
Biomass	Indirect	Bio-IBN (BM6.1)	-	MTBE (M6)

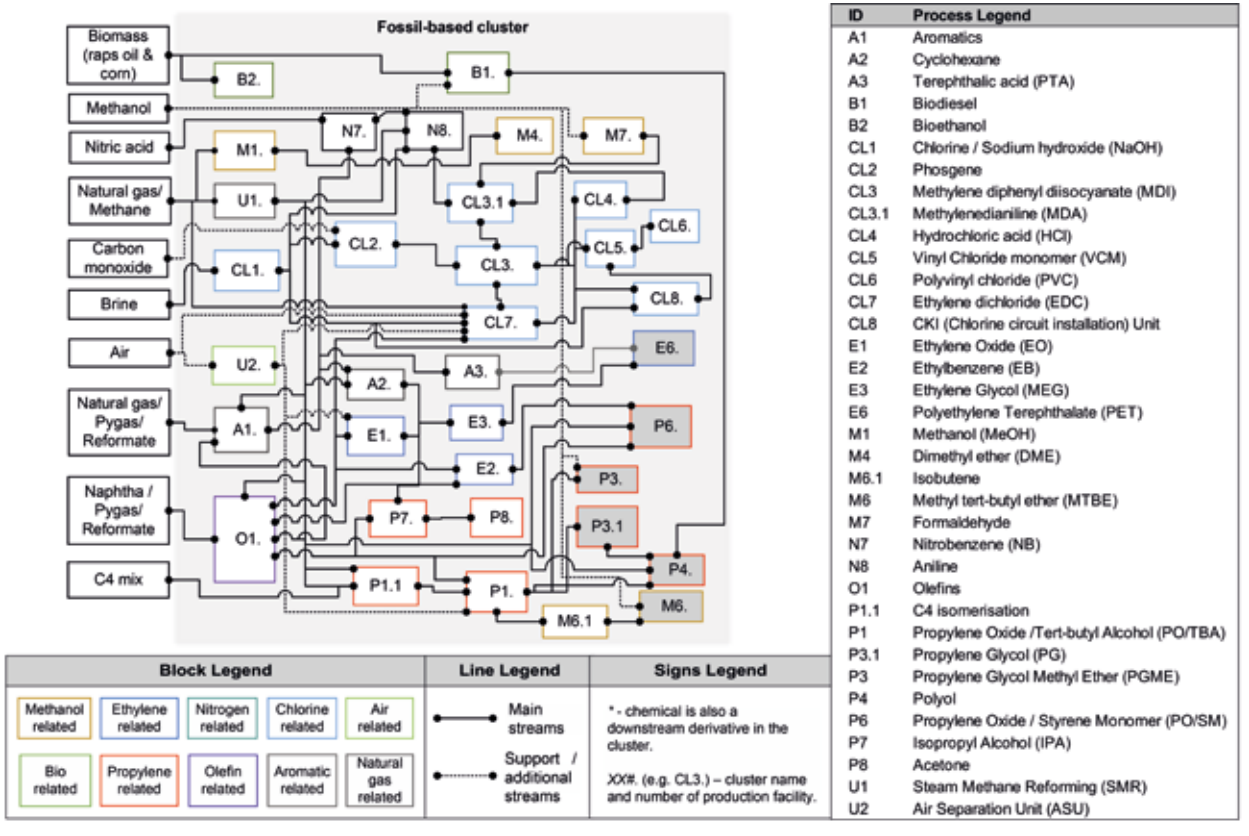

ID	Process Legend
A1	Aromatics
A2	Cyclohexane
A3	Terephthalic acid (PTA)
B1	Biodiesel
B2	Bioethanol
CL1	Chlorine / Sodium hydroxide (NaOH)
CL2	Phosgene
CL3	Methylene diphenyl diisocyanate (MDI)
CL3.1	Methylenedianiline (MDA)
CL4	Hydrochloric acid (HCl)
CL5	Vinyl Chloride monomer (VCM)
CL6	Polyvinyl chloride (PVC)
CL7	Ethylene dichloride (EDC)
CL8	CKI (Chlorine circuit installation) Unit
E1	Ethylene Oxide (EO)
E2	Ethylbenzene (EB)
E3	Ethylene Glycol (MEG)
E6	Polyethylene Terephthalate (PET)
M1	Methanol (MeOH)
M4	Dimethyl ether (DME)
M6.1	Isobutene
M6	Methyl tert-butyl ether (MTBE)
M7	Formaldehyde
N7	Nitrobenzene (NB)
N8	Aniline
O1	Olefins
P1.1	C4 isomerisation
P1	Propylene Oxide /Tert-butyl Alcohol (PO/TBA)
P3.1	Propylene Glycol (PG)
P3	Propylene Glycol Methyl Ether (PGME)
P4	Polyol
P6	Propylene Oxide / Styrene Monomer (PO/SM)
P7	Isopropyl Alcohol (IPA)
P8	Acetone
U1	Steam Methane Reforming (SMR)
U2	Air Separation Unit (ASU)

Figure 1. A schematic representation of the chemicals produced by the in-house Aspen Plus v12 model of the PoR [8]. The six DD production processes selected for the study are depicted in grey. For simplicity, the figure only shows the main material flows. For detailed information on each separate process, see Appendix A, Tables A.1 and A.2.

The objectives of the superstructure-based optimisation model were set to (i) minimise the amount of fossil-based carbon entering the cluster, and (ii) minimise additional capital expenditure (CAPEX). The latest was introduced in the model as a capital penalty-based function, consisting of the capital cost of newly added ACS processes and the cost associated with removing existing fossil-based processes. Among the two objective functions, the model was set to prioritise defossilisation over CAPEX. The description of the superstructure optimisation model, its scope, objectives, and constraints, was presented in detail in Chapter 4.

2.2 Scenarios

To explore the impact of feedstock and land availability, and changes in production capacities, four scenarios were analysed: inflexible conditions (INFLEX), operational flexibility (FLEX), feedstock availability (FEED), and land availability (LAND).

The INFLEX scenario aimed to explore the cluster's potential for defossilisation without constraints. In this scenario, the processes were assumed to operate under inflexible conditions for upstream units, without feedstock or land limitations. It was assumed that all ACS-based processes were available at the same time for the model to be selected for deployment. The INFLEX scenario results correspond to those discussed in detail in Chapter 4.

In the FLEX scenario, it was assessed the impact of the plants' capacity to modify production in response to changes in downstream demand. Here, it was explored what the impact would be if upstream processes could operate at 90, 80, and 70% of their nominal capacity, while DD processes needed to satisfy the market requirements of the fossil-based cluster.

In the FEED scenario, the impact of alternative feedstock availability (i.e., biomass, bio-glycerol, plastic waste, and CO_2) was assessed. ACS feedstock availability of 75, 50, and 25% was introduced, estimated based on the maximum availability present in the Netherlands, see Table 2. It was assumed that CO_2 is not limited, as it can be captured from the air; however, a limit was applied to the renewable electricity available for CO_2 and water electrolysers.

Table 2. Feedstock availability in the Netherlands

Feedstock	**Estimated limit**	*Unit*	*Ref.*
Biomass	8,000	kt/y	10
Sorted plastic waste	5,000	kt/y	11
Renewable electricity	61	TWh/y	12
Bio-glycerol	674	kt/y	13–16

The LAND scenario examined the impact of increasing land availability via land expansion of the cluster. This was examined by exploring the impacts if 10%, 20%, and 30% of the current cluster's land footprint would be additionally available for new processes. Note that only the bare land footprint of the main equipment was considered, and the land from the removed processes was assumed not to be immediately available for new processes.

Each case under each scenario was run to generate Pareto optimal solutions, which were then ranked using the TOPSIS method. The results from each model scenario run are available in the Appendix E.

2.3 Assessment of the cluster's performance

2.3.1 Evaluation of the clustered solutions

To compare the performance of the different cases at the cluster level, solutions from the Pareto front that form a central group of optimal solutions were further examined, as they represent the most balanced trade-offs between the two objectives of the superstructure, to minimise the amount of fossil-based carbon entering the cluster and to minimise CAPEX penalties. ACS portfolios within a group of optimal solutions were then assessed to identify the median frequency of the number and size of ACS plants appearing across each corresponding case, following the approach used in Chapter 4. These values were considered while assessing the impacts of deploying ACS technologies within the representative cluster. The impact assessment was carried out to identify structural, techno-economic, and environmental changes at the cluster level. The detailed approach to the impact assessment is presented in Chapter 4.

2.3.2 Impact assessment

To identify potential impacts at the cluster level, a graphical network representation was developed for each separate case in each scenario. Changes in the interconnections between processes were identified and categorised as follows: (i) removed, (ii) partially affected, (iii) unchanged, and (iv) added. Note that due to the size and complexity of the representative cluster, the focus was primarily on identifying changes in units and material flows. Energy flows were not tracked graphically, but changes were accounted for when assessing techno-economic and environmental impacts.

Each case was evaluated using techno-economic and environmental (TEE) indicators, following the methodology presented in Chapter 4; see definitions and formulas for TEE indicators in Chapter 2, Table 1. To assess the cluster's techno-economic performance, carbon feedstock, capital expenditures (CAPEX), and operating expenditures (OPEX) were used. For the assessment, mass and energy balances, and costs of raw materials and energy were retrieved from the optimisation model, see Appendix E. For evaluating environmental changes, the following indicators were used: water consumption, bare land requirements, and total CO_2 emissions, including Scope 1 (process emissions) and Scope 2 (emissions from energy use). Scope 2 emissions were calculated using the emission

factors reported in Appendix A, Table A.4. The bare land requirement considered the footprint of the main equipment, such as columns, reactors, and heat exchangers. Median values of the TEE indicators were calculated for each specific case and compared with the other cases, both within and across scenarios.

3. RESULTS

3.1 INFLEX and FLEX scenarios

Figure 2 shows the Pareto fronts for the INFLEX (black dots) and FLEX scenarios (colour dots). In the INFLEX scenario, the model assumes inflexible upstream units, avoiding adjustments to their production capacities. In contrast, the FLEX scenario explores how potential changes in operational flexibility can affect the model's results.

The Pareto fronts across both scenarios are comparable, Figure 2. In the INFLEX scenario, the far-rightmost solution represents the fossil-based cluster (base case). The FLEX 10% case is almost identical but shows a c.a. 500 kt/y lower amount of fossil-based carbon. This is mainly because the model setup enables the cluster's decarbonisation by optimising existing units rather than introducing new technologies. The results show that without limitations (INFLEX), deploying ACS processes for DDs production could reduce by c.a. 47-50% the amount of fossil carbon entering the cluster at a cost of 2,651-3,100 MEUR in CAPEX penalty. However, if the units could adjust their production quantities (FLEX scenario), fossil-based carbon entering the cluster can be further reduced by 16% at the same CAPEX penalty.

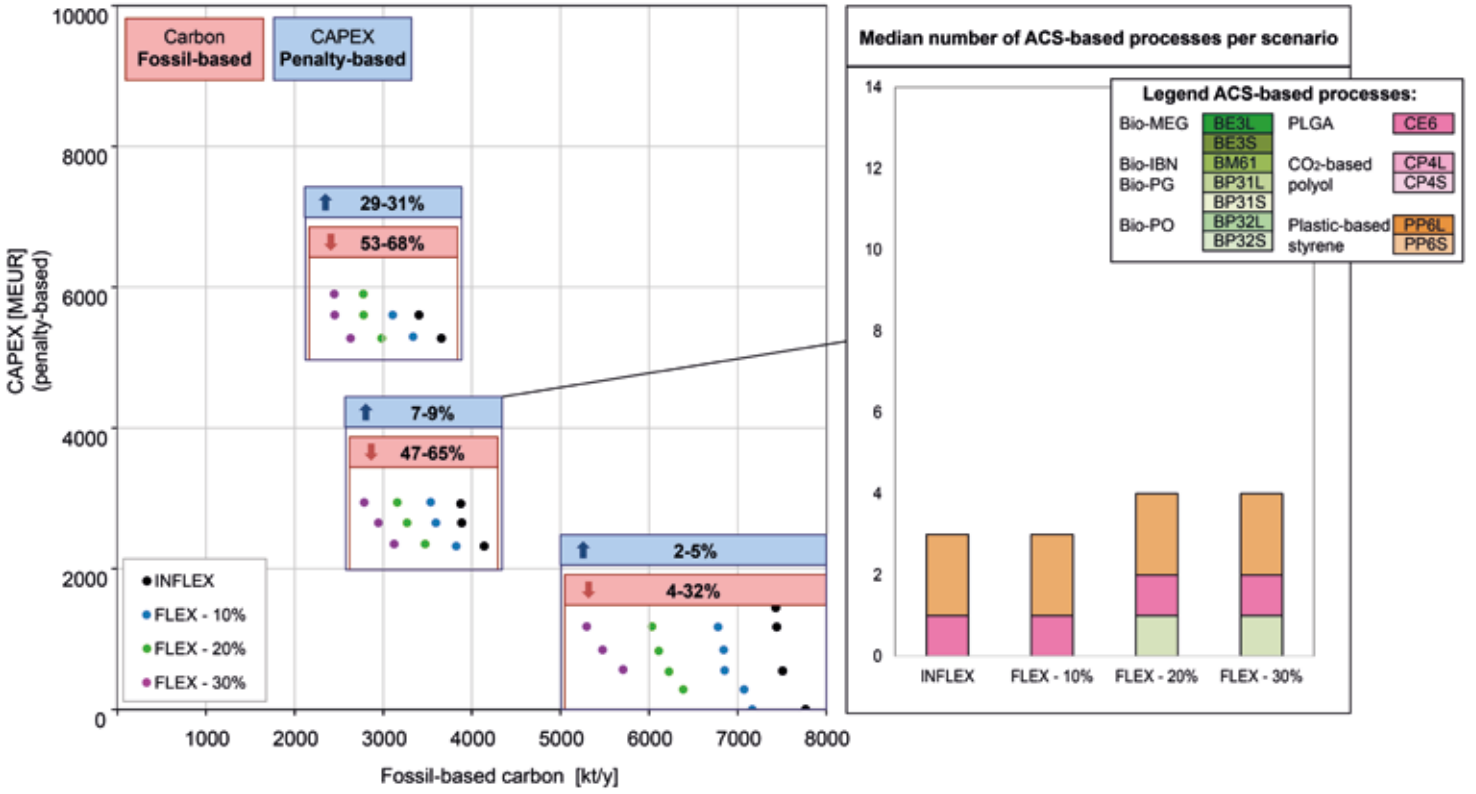

Figure 2. Pareto front and portfolio of ACS technologies for INFLEX and FLEX scenarios, based on the results presented in the Appendix E. The ACS portfolio shows a median frequency of the number and size of ACS processes appearing per case. The processes are indicated by colour, where those that use biomass (green), CO_2 (pink), and plastic waste (orange) are highlighted. For details on the processes, see Appendix A, Tables A.1 and A.2. Propylene oxide (PO), Ethylene glycol (MEG), Propylene glycol (PG); Isobutene (IBN); Poly(lactic-co-glycolic) acid (PLGA).

The portfolios of ACS processes across INFLEX and FLEX scenarios appear nearly identical (see Figure 2), with a predominant combination of the waste- and CO_2-based processes (i.e., one PLGA and two waste-to-styrene plants). With increased operational flexibility of upstream units (i.e., cases FLEX 20% and 30%), the portfolio of ACS technologies expands by adding the bio-PG process. This is because it is a relatively small process with additional CAPEX of 30 MEUR. At the same time, its deployment reuses existing glycerol produced within the cluster (i.e., from biodiesel production) and reduces downstream demand for fossil-based chemicals produced upstream, thereby lowering the cluster's fossil carbon.

Given the similarity of the ACS technology portfolios across INFLEX and FLEX scenarios (Figure 2), similar changes are also observed in the cluster structure, see Figure 3. Changes start with the deployment of one PLGA (CE6) and two waste-to-styrene plants (PP6L) to replace fossil-based PET (E6) and styrene (P6) processes (Figure 3). As a consequence, several upstream units are no longer required, including terephthalic acid (A3), ethylene oxide (E1), ethylbenzene (E2), and ethylene glycol (E3). Due to the removal of these processes, downstream demand is also impacted, resulting in the removal of the aromatics (A1), and significantly affecting other upstream processes such as olefins (O1), methanol (M1), and steam methane reforming (U1) unit and the air separation (U2) unit.

In the model, the deployment of the bio-PG process (BP31S) substitutes half of the fossil-based PG production (P31), thereby reducing the demand for propylene oxide (PO) from the PO/TBA (P1) process and affecting several other upstream processes, such as the C4 mix (P1.1) and O1 process. The results show significant cascading impacts, with more than half of the products from the olefin plant (O1) no longer used downstream (i.e., benzene, propylene, ethylene); see Chapter 4, Table 3. Despite this, the O1 process remains unchanged, as it still generates other co-products required for downstream production (i.e., benzene, C4 mix).

In both the INFLEX and FLEX scenarios, the removal of the aromatics (A1) process significantly decreases fossil-based carbon input to the cluster, as the process contributes up to 45% of the fossil carbon entering the cluster. If the process units could adjust their production quantities after deployment of ACS processes in response to the reduced demand (FLEX scenario), further reductions in fossil carbon intake can be observed across all cases (Table 3).

The process experiencing the biggest change in the downstream demand from cascading effects is O1 production. A 10% reduction in its production capacity (FLEX 10%) would result in an additional reduction of c.a. 8% in fossil carbon entering the cluster compared to INFLEX. In FLEX 30%, the adjustment of production quantities of O1 along with PG (P31), C4 isomerisation (P1.1) and PO/TBA (P1) processes, lowers the amount of the fossil carbon entering the cluster by 24% compared to INFLEX (Table 3).

INFLEX & FLEX 10%
2 waste-to-styrene (PPL6); CO_2-based PLGA (CE6)

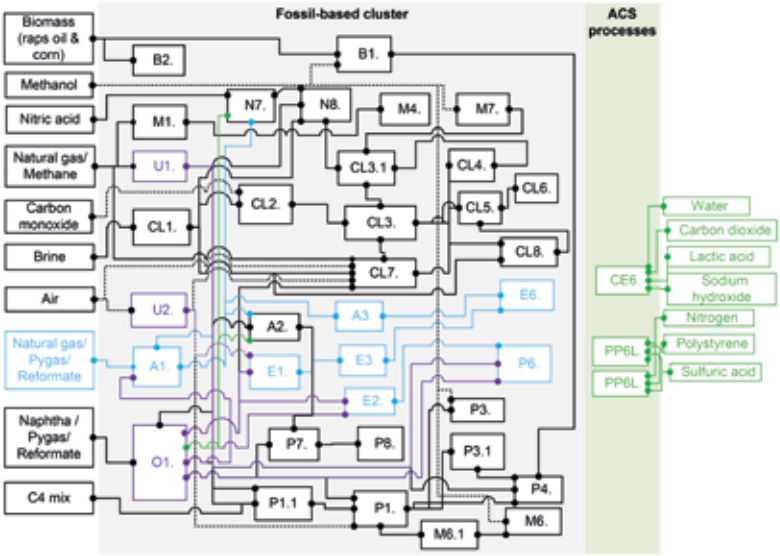

FLEX 20% & FLEX 30%
2 waste-to-styrene (PPL6); CO_2-based PLGA (CE6)
bio-PG (BP31S)

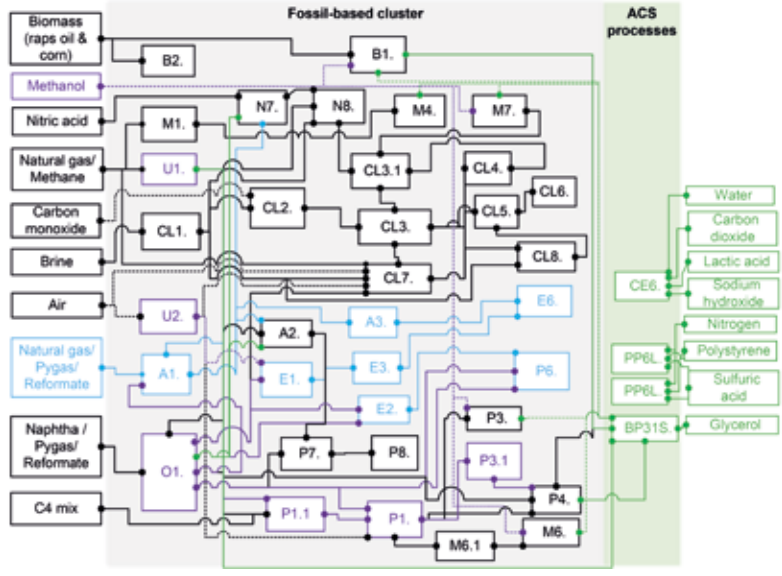

Figure 3. Mapping of changes inside the representative cluster after simultaneously integrating ACS-based processes from the cluster of optimal solutions in INFLEX and FLEX (Figure 2). The figure illustrates the processes/streams that would disappear (in blue), those that remain but are affected (in purple), and the new ones (in green).

Table 3. Key performance indicators for the INFLEX and FLEX scenarios. The table shows colour variation in KPIs compared to the ones of the INFLEX scenario:

(i) increment: 0-20%; 20-40%; 40-60%; 60-100%; >100%; and

(ii) decrement: 0-20%; 20-40%; 40-60%; 60-100%; >100%.

KPI	Unit	Fossil-based cluster	INFLEX	FLEX 10%	FLEX 30%
C_{fossil}	kt/y	7,767	3,886	3,594	2,945
C_{total}	kt/y	9,361	6,632	6,280	5,537
CAPEX	MEUR	11,991	12,801	12,801	12,831
OPEX	MEUR/y	12,574	7,426	6,996	6,404
TWC	Mt/y	79	63	62	60
TL*	m^2	10,521	11,495	11,495	11,551
$CO_2^{scope\ 1}$	kt $CO_{2\text{-eq/y}}$	11,470	10,751	10,585	10,216
$CO_2^{scope\ 2**}$	kt $CO_{2\text{-eq/y}}$	7,860	3,721	3,430	2,766
CO_2^{total}	kt $CO_{2\text{-eq/y}}$	19,331	14,472	14,015	12,946

*The indicator only looks at equipment footprint and does not account for any land use outside the system boundaries.

**Assuming the current energy mix of the industrial steam production (see Appendix A, Table A.4).

Due to the removal of fossil-based processes (i.e., olefins, styrene, terephthalic acid, ethylene oxide, ethylbenzene, and ethylene glycol), there are significant changes in the energy profiles and amounts of products, utilities, and waste streams generated by the cluster, see Appendix E. Compared to the base case (fossil-based cluster), the material and energy costs in the INFLEX scenario are 33% and 36% lower, respectively. These reductions result in OPEX that is c.a. 40% lower (Table 3). The cluster's revenue from selling excess energy streams within the cluster increases by 551 MEUR/y, mainly driven by heat production from the waste-to-styrene process. However, the revenue from the products is c.a. 25% lower, as products such as o-xylene, p-xylene, previously co-produced, are no longer generated, see Appendix E. Adjusting production (FLEX scenario) decreases material and energy costs but also reduces the cluster's revenue across cases, see Appendix E. Compared to INFLEX, FLEX 30% shows 14% (c.a. 1,022 MEUR/y) lower OPEX and 27% (c.a. 400 MEUR/y) lower total revenue.

Across scenarios, CAPEX and total land requirements (TL) (Table 3) are at the same level, due to the similar portfolio of ACS technologies in the INFLEX and FLEX scenarios (Figure 2). Additional deployment of the BP31S process results in less than 1% increase in CAPEX and TL. Compared to the INFLEX scenario, the total water consumption (TWC) under FLEX 30% is 3 kt/y lower, and Scope 2 CO_2 emissions (FLEX 30%) are lowered by a third, c.a. 950 $ktCO_{2\text{-eq}}$/y. This is mainly due to changes in production capacity decreasing energy demand across cases.

3.2 FEED scenario

The positions of solutions on the Pareto fronts of the FEED scenario do not vary significantly from the ones of the INFLEX scenario, see Figure 4. The main difference is the number of available solutions: in scenarios with decreased feedstock (FEED) availability, fewer solutions are generated by the model. For instance, eight solutions occur at 75% feedstock availability, whereas only seven occur at 50% and 25% availability.

Results show that the INFLEX scenario is dominated by two processes, PLGA (CE6) and two waste-to-styrene plants (PP6L). In the FEED 75%, 50%, 25% cases, additional bio-based technologies are selected to produce bio-MEG, PG, and/or PO, see Figure 4. However, once feedstock availability falls to 50% or lower, fewer of those processes appear in the selected solutions. Nonetheless, the most frequent combination remains PLGA and waste-to-styrene plants. These processes are within the amounts of ACS-based feedstocks that are expected to be available in the Netherlands (see Table 2). For instance, to produce c.a. 650 kt/y of fossil-based styrene, the waste-to-styrene processes (PP6L) require a total of 978 kt/y of waste polystyrene, which corresponds to c.a. 20% of the total sorted plastic waste in the Netherlands.

Similar to the INFLEX and FLEX scenarios, deploying PLGA and waste-to-styrene plants, in place of fossil-based processes, results in similar changes in the cluster's structure across all FEED cases, see Figure 3 and Figure 5. However, the deployment of bio-based processes for -MEG, -PG, and -PO production in each case leads to additional changes to the cluster's structure. Across all cases, the deployment of bio-MEG (BE3S), Figure 5, meets the market demand for PG, allowing for the removal of fossil-based PG production (P3.1). Consequently, the PO that is currently supplied by the PO/TBA process (P1) for PG production is no longer needed. The combination of bio-PG (BP31L) and bio-PO (BP32) aims to maximise defossilisation of the cluster by alternatively producing downstream derivatives from bio-PO. This affects the demand for the C4 isomerisation (P1.1) and PO/TBA (P1) processes. However, it does not affect the existing interconnections within the cluster, and both upstream processes remain in place, as TBA from (P1) is still required for isobutene (M6.1) and methyl-tert-butyl ether (M6). Therefore, isobutene from (P1.1) and propylene from (P1) are now produced in excess.

Although deployment of ACS-based processes in the cluster's layout is expected to reduce fossil carbon intake, in the FEED 75% case, it is c.a. 120 kt/y higher (Table 4). This is primarily driven by the utilisation of natural gas for on-site production of bio-PG (BP32L); see Appendix A, Tables A.1 and A.2. ACS portfolios of FEED 50%, and 25% vary compared to the INFLEX, yet the reduction in the fossil carbon is insignificant (less than 1%). The FEED 25% case indicators most closely match those of the INFLEX scenario, due to the similarity in the ACS technology portfolio, with the only difference being a single process (BE3S). This suggests that the same results as in INFLEX can be achieved even under expected feedstock availability (Table 4).

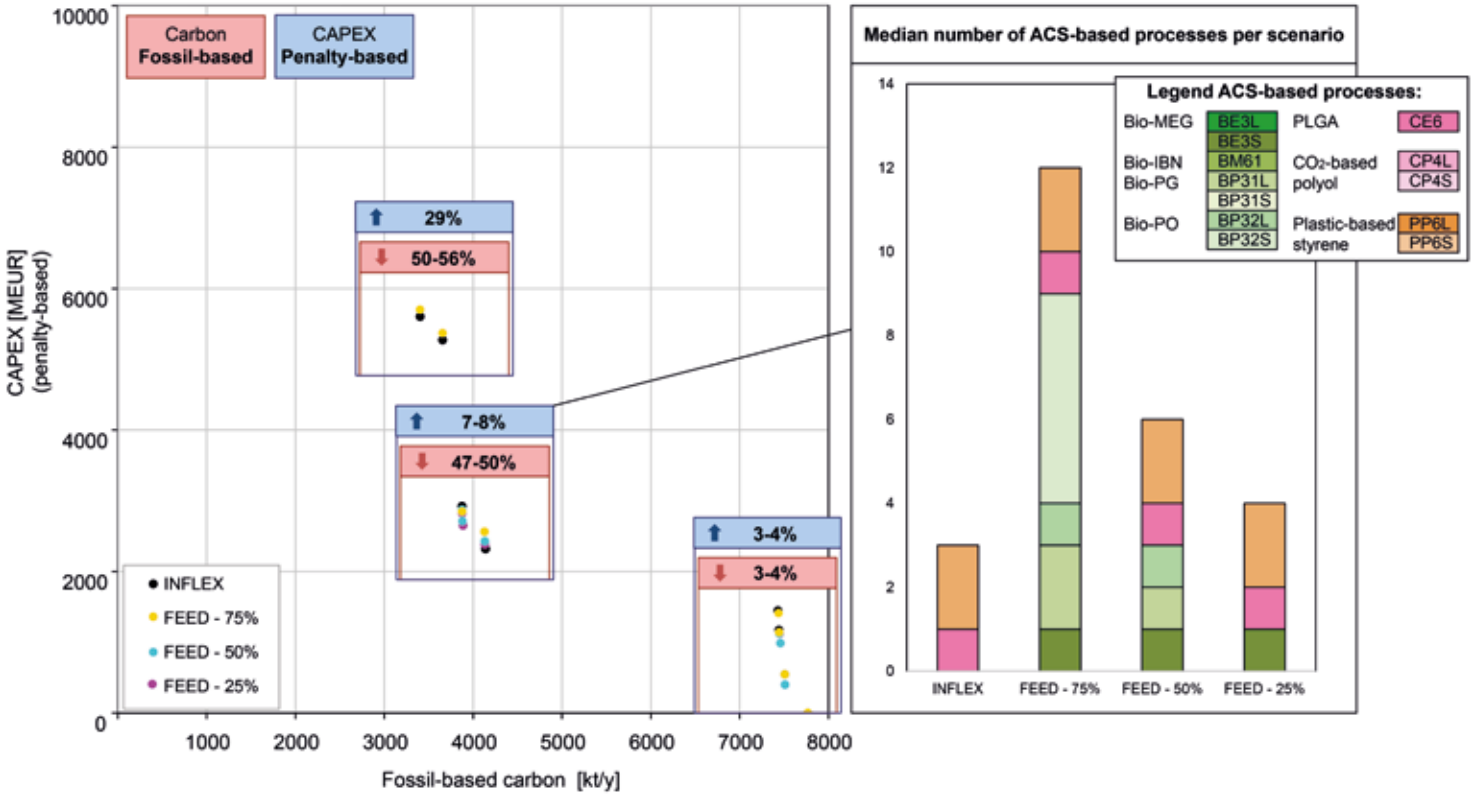

Figure 4. Pareto front and portfolio of ACS technologies for INFLEX and FEED scenarios, based on the results presented in the Appendix E. The ACS portfolio shows a median frequency of the number and size of ACS processes appearing per case. The processes are indicated by colour, where those that use biomass (green), CO_2 (pink), and plastic waste (orange) are highlighted. For details on the processes, see Appendix A, Tables A.1 and A.2. Propylene oxide (PO), Ethylene glycol (MEG), Propylene glycol (PG); Isobutene (IBN); Poly(lactic-co-glycolic) acid (PLGA).

Changes in energy requirements across FEED cases remain minor compared to the INFLEX scenario. The predominance of bio-based processes under FEED 75% results in additional requirements for cooling water (c.a. 1 TJ/y) and very low pressure steam (LLPS; c.a. 2 TJ/y). Apart from this, the energy requirements for the other cases (FEED 50% and 25%) are comparable to those of the INFLEX scenario. Energy costs are, on average, 5% (45 MEUR/y) lower across all the cases due to the replacement of fossil-based PG production (P3.1).

FEED 75%

2 waste-to-styrene (PPL6); CO_2-based PLGA (CE6); 2 bio-PG (BP31L); bio-MEG (BE3S); 6 bio-PO (1- BP32L; 5 - BP32S)

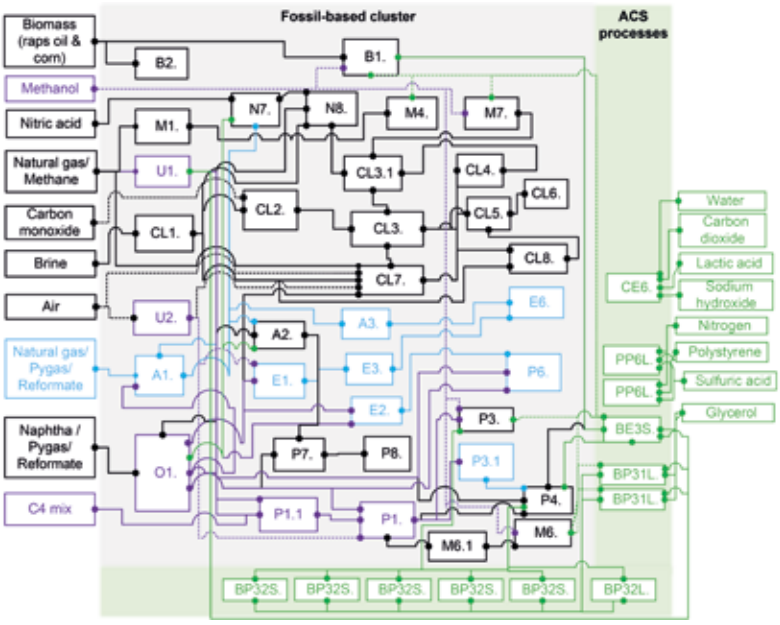

Figure 5. Mapping of changes inside the representative cluster after simultaneously integrating ACS-based processes from the cluster of optimal solutions in INFLEX and FEED (Figure 4). The figure illustrates the processes/streams that would disappear (in blue), those that remain but are affected (in purple), and the new ones (in green).

FEED 50%

2 waste-to-styrene (PPL6); CO_2-based PLGA (CE6); bio-PG (BP31L); bio-MEG (BE3S); bio-PO (BP32L)

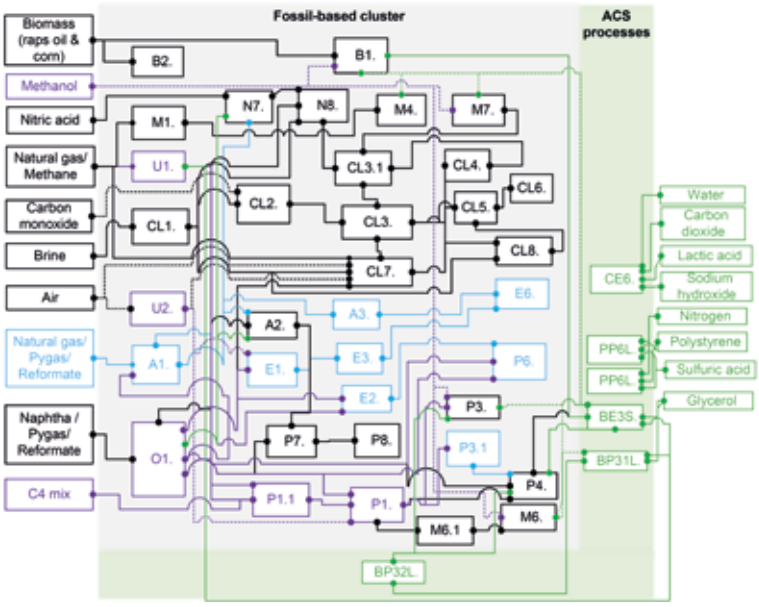

FEED 25%

2 waste-to-styrene (PPL6); CO_2-based PLGA (CE6); bio-MEG (BE3S)

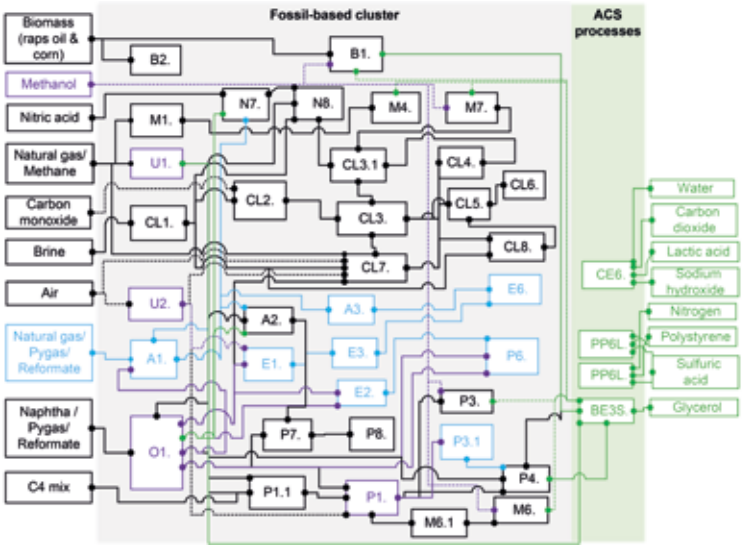

Figure 5. Mapping of changes inside the representative cluster after simultaneously integrating ACS-based processes from the cluster of optimal solutions in INFLEX and FEED (Figure 4). (Continued)

Both MEG and bio-PG production require additional imports of glycerol, making it a primary cost driver among ACS raw materials. In the FEED 75% case, for instance, the amount of required glycerol is approximately 476 kt/y. Although the material costs across FEED cases are higher compared to the INFLEX scenario, the difference is c.a. 4% (180 MEUR/y) in the FEED 75% and 50% cases and less than 1% (50 MEUR/y) in the FEED 25% case. These changes result in a minor increase of no more than 2% in OPEX across all cases.

Revenue within the cluster also changes, see Appendix E. The combined deployment of BE3S and BP31L results in an excess of MEG and methanol (MeOH) produced in the cluster. While the latter can be fully reused within the cluster, reducing the need for fossil-based MeOH import, MEG is sold to the market. Product revenues in FEED 75% and 25% are higher than in the INFLEX scenario, e.g., 1,083 and 906 MEUR/y, respectively. Energy revenues remain unchanged compared to the INFLEX scenario, as the added processes generate no extra steam or electricity.

The FEED 75% shows 12% of additional CAPEX and 3% increase in bare land required (Table 4). Scope 1 CO_2 emissions in the FEED 75% and 50% cases are higher compared to the INFLEX scenario, mainly due to the bio-PO processes (BP32L), which generate steam on site. Note that it is assumed that steam generation is based on the current energy mix in industrial steam production, which is a very conservative assumption. If green steam is used, those emissions will be reduced.

Table 4. Key performance indicators for the INFLEX and FEED scenarios. The table shows colour variation in KPIs compared to the ones of the INFLEX scenario:

(i) increment: 0-20%; 20-40%; 40-60%; 60-100%; >100%; and

(ii) decrement: 0-20%; 20-40%; 40-60%; 60-100%; >100%.

KPI	Unit	Fossil-based cluster	INFLEX	FEED 75%	FEED 50%	FEED 25%
C_{fossil}	kt/y	7,767	3,886	4,002	3,879	3,886
C_{total}	kt/y	9,361	6,632	6,700	6,593	6,546
CAPEX	MEUR	11,991	12,801	12,952	12,886	12,839
OPEX	MEUR/y	12,574	7,426	7,584	7,511	7,438
TWC	Mt/y	79	63	63	63	63
TL*	m^2	10,521	11,495	11,896	11,735	11,602
$CO_2^{scope\ 1}$	kt $CO_{2\text{-eq/y}}$	11,470	10,751	11,112	10,763	10,751
$CO_2^{scope\ 2**}$	kt $CO_{2\text{-eq/y}}$	7,860	3,721	3,879	3,735	3,721
CO_2^{total}	kt $CO_{2\text{-eq/y}}$	19,331	14,472	14,991	14,498	14,520

*The indicator only looks at equipment footprint and does not account for any land use outside the system boundaries.

**Assuming the current energy mix of the industrial steam production (see Appendix A, Table A.4).

3.3 LAND scenario

The number of potential solutions across LAND cases differs from that in the INFLEX scenario; see Figure 6. If the cluster only expands by 10% (LAND 10%), the Pareto front would show only 5 available solutions. Once additional land exceeds 20% (LAND 20% and 30%), the total number of solutions increases to 9.

Compared to the INFLEX scenario, the LAND 10% case differs by two selected ACS processes: polyol process (CP4) and bio-based PG (BP31L), see Figure 6. Across all cases, one key observation is the selection of the polyol process, which had not been selected before, although it is relatively small and requires 16 m² of land. This process was previously not prioritised by the model due to its limited defossilisation impact, but the current scenario and constraints drive the model to include it. In all LAND cases, PLGA coupling with waste-to-styrene processes prevails. LAND 20% and 30% have the same ACS portfolio of technologies. This is because, while the model identifies various potential portfolio combinations, the same defossilisation can be achieved without increasing CAPEX, even with additional available land.

In the LAND scenario, the changes at the cluster level after deployment of PLGA and waste-to-styrene process are comparable to those of the INFLEX scenario, see Figure 3 and Figure 7. The addition of the CO_2-based polyol process (CP4) under LAND 10% replaces P4, decreasing the downstream demand for PO. In LAND 20% and 30%, the model maximises the defossilisation of the cluster by alternatively producing downstream derivatives from bio-PO (BP32L), thereby reducing the production of the C4 isomerisation (P1.1) and PO/TBA (P1) processes. However, similarly to the FEED scenario in Section 3.2, the upstream cluster's structure remains unchanged, as PO/TBA (P1) continues to produce the chemicals required for downstream processes, such as isobutene (M6.1) and MTBE (M6). Nevertheless, the main differences are only in the production rates and overall cluster performance, determined by the number and size of the ACS technologies.

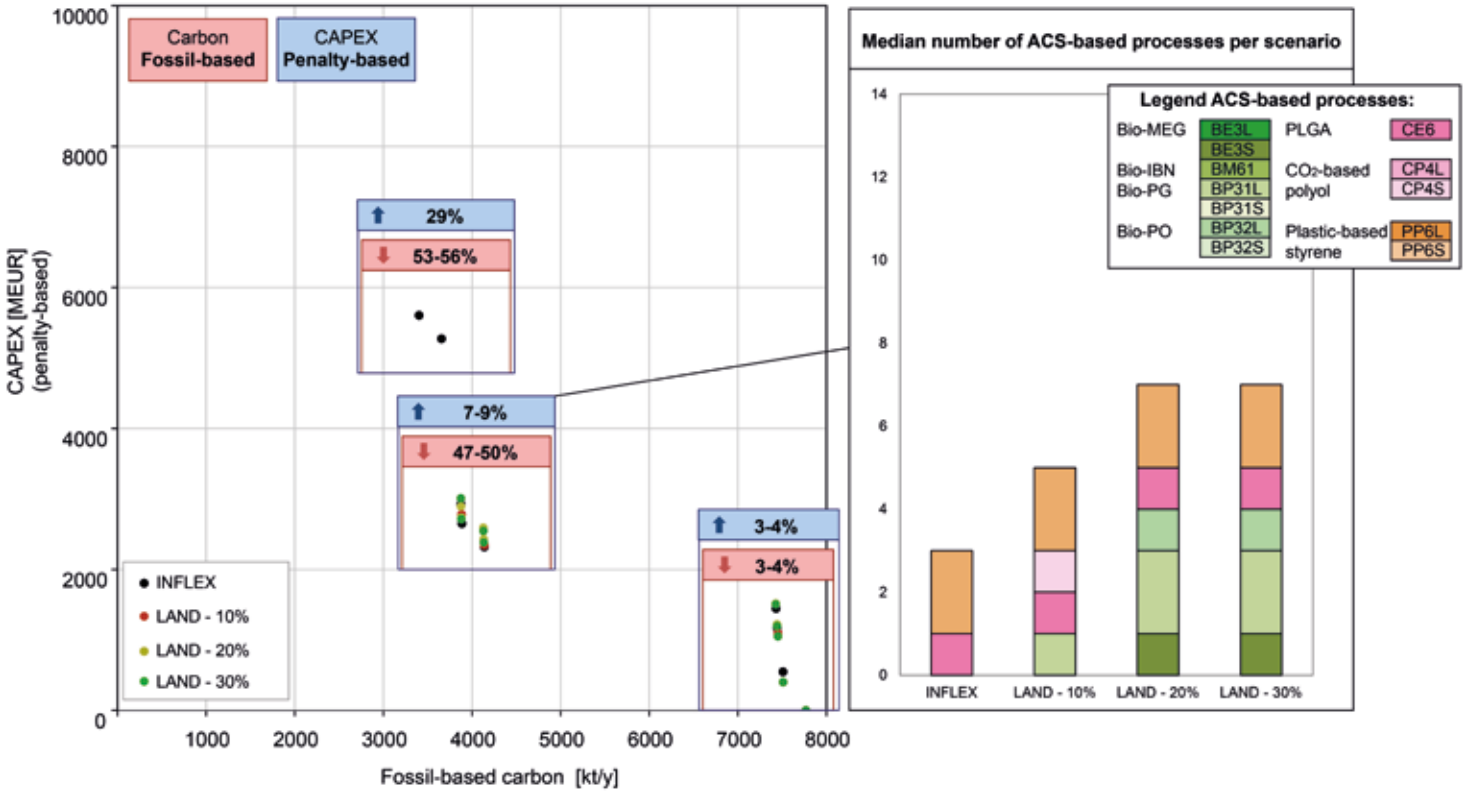

Figure 6. Pareto front and portfolio of ACS technologies for INFLEX and LAND scenarios, based on the results presented in the Appendix E. The ACS portfolio shows a median frequency of the number and size of ACS processes appearing per case. The processes are indicated by colour, where those that use biomass (green), CO_2 (pink), and plastic waste (orange) are highlighted. For details on the processes, see Appendix A, Tables A.1 and A.2. Propylene oxide (PO), Ethylene glycol (MEG), Propylene glycol (PG); Isobutene (IBN); Poly(lactic-co-glycolic) acid (PLGA).

Under the current scenario, it is assumed that the land from the removed processes is not available. However, the bare land of the removed aromatics (A1) alone, c.a. 1,500 m^2, could fully cover the land requirements of the selected ACS-based processes, c.a. 1,050 m^2 across all LAND cases. Moreover, if it is possible to acquire 10% or more additional land from the current cluster's footprint, 10,521 m^2, larger processes such as bio-IBN (BM61) would be selected. Deploying BM61 would completely reshape the propylene cluster, removing C4 isomerisation (P1.1) and PO/TBA (P1) processes, making it possible to defossilise the cluster up to c.a. 56%.

Fossil-based carbon across the LAND cases is slightly higher than in INFLEX, see Table 5. Changes in energy requirements are minor and mainly driven by an increase in cooling water (1 TJ/y) and LLPS (1 TJ/y). However, due to the replacement of fossil-based PG production (P3.1), energy costs are 7% lower than in the INFLEX scenario. While LAND 10% case requires c.a. 66 kt/y of glycerol for the production of bio- MEG and -PG, LAND 20% and 30% require 6 times higher amount of glycerol. Compared to the INFLEX scenario, this results in 4% higher material costs in the LAND 20% and 30% cases. Despite this, material costs have a limited effect on OPEX.

The ACS processes across cases produce only a small amount of additional products and energy streams, resulting in less than 15% increase in revenue compared to INFLEX. In all cases, CAPEX and TL are directly influenced by the number and size of ACS-based processes (Table 5). Compared to the INFLEX scenario, total CO_2 emissions across the LAND cases are lower, mainly due to reduced Scope 2 CO_2 emissions following the removal of upstream processes. Scope 1 CO_2 emissions across the LAND scenario are 4% higher than in the INFLEX scenario, primarily due to on-site steam generation at BP32L.

Table 5. Key performance indicators for the INFLEX and LAND scenarios. The table shows colour variation in KPIs compared to the ones of the INFLEX scenario:

(i) increment: 0-20%; 20-40%; 40-60%; 60-100%; >100%; and

(ii) decrement: 0-20%; 20-40%; 40-60%; 60-100%; >100%.

KPI	Unit	Fossil-based cluster	INFLEX	LAND 10%	LAND 20% & LAND 30%
C_{fossil}	kt/y	7,767	3,886	4,011	4,004
C_{total}	kt/y	9,361	6,632	6,619	6,701
CAPEX	MEUR	11,991	12,801	12,854	12,930
OPEX	MEUR/y	12,574	7,426	7,345	7,561
TWC	Mt/y	79	63	63	63
TL*	m^2	10,521	11,495	11,542	11,849
$CO_2^{scope\ 1}$	kt $CO_{2\text{-eq/y}}$	11,470	10,751	11,141	11,174
$CO_2^{scope\ 2**}$	kt $CO_{2\text{-eq/y}}$	7,860	3,721	3,523	3,533
CO_2^{total}	kt $CO_{2\text{-eq/y}}$	19,331	14,472	14,664	14,683

*The indicator only looks at equipment footprint and does not account for any land use outside the system boundaries.

**Assuming the current energy mix of the industrial steam production (see Appendix A, Table A.4).

LAND 10%

2 waste-to-styrene (PPL6); CO_2-based PLGA (CE6); bio-PG (BP31L); CO_2-based polyol (CP4)

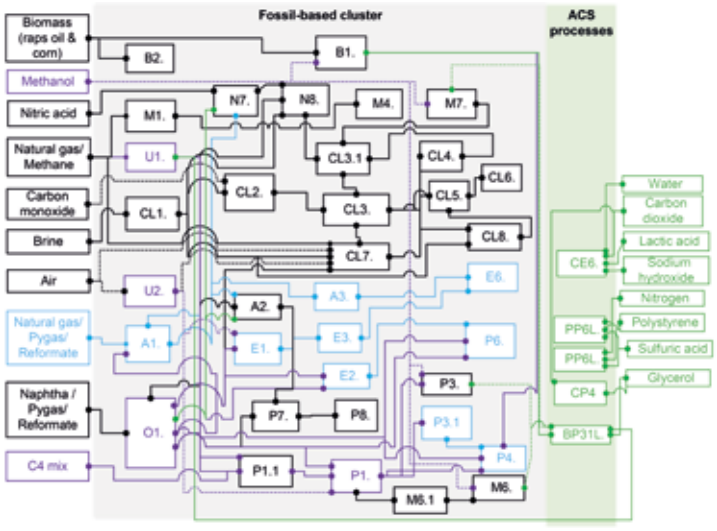

LAND 20% & LAND 30%

2 waste-to-styrene (PPL6); CO_2-based PLGA (CE6); 2 bio-PG (BP31L); bio-MEG (BE3S); bio-PO (BP32L)

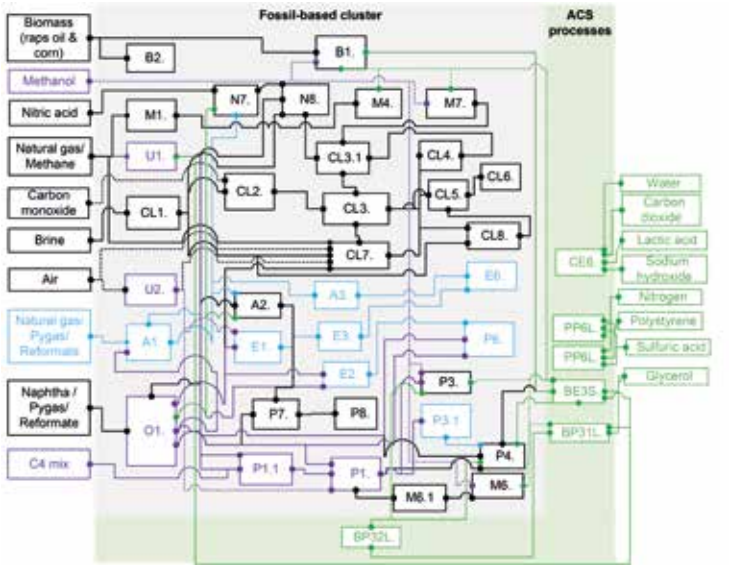

Figure 7. Mapping of changes inside the representative cluster after simultaneously integrating ACS-based processes from the cluster of optimal solutions in INFLEX and LAND (Figure 6). The figure illustrates the processes/streams that would disappear (in blue), those that remain but are affected (in purple), and the new ones (in green).

4. DISCUSSION

4.1 ACS deployment options

A diversified portfolio of ACS processes is present across all scenarios, see Figure 2, Figure 4, and Figure 6. A key observation is the similarity in the ACS portfolios across all cases. PLGA (CE6) and waste-to-styrene (PP6) stand out as preferred options, as their appearance displaces the most carbon-intensive DD processes, such as styrene (P6) and PET (E6), see INFLEX, Figure 3, removing upstream production processes: ethylbenzene (E2), terephthalic acid (A3), ethylene oxide (E1), ethylene glycol (E3), and aromatics (A1). As a result of these changes, the amount of fossil carbon entering the cluster is reduced by half. The changes result in additional CAPEX of about 8% relative to the base-case cluster. This underscores the findings in Chapter 4, emphasising that the combination of ACS technologies is essential for significant upstream cascading impacts that drive defossilisation, even under limitations.

4.2 Excess of fossil-based chemicals

In the representative cluster, chemicals are produced to meet downstream and market demands. Deploying ACS processes reduces downstream demand for certain fossil-based chemicals, which are now produced in excess (e.g., byproducts of olefin (O1) or PO/TBA (P1) production; for more details, refer to Chapter 4, Table 3). The excess depends on the portfolio of deployed ACS processes and on how their combination reduces upstream demand.

In all cases, after ACS deployment, there is an average excess of c.a. 930 kt/y of fossil-based chemicals, see Appendix E. If those would not have a market, this would result in 180 MEUR/y in waste treatment costs. Assuming that plants within the cluster could adjust their operations by 30% (FLEX 30%), the excess of fossil-based chemicals production and associated waste treatment costs could be reduced by half compared to the INFLEX scenario. However, operational flexibility strongly depends on the technical and economic constraints of the production units. Therefore, it remains a major question whether plants could indeed adjust their production and still have a business case.

Across FEED and LAND scenarios, there is a minor change in OPEX compared to the INFLEX scenario, see Sections 3.2 and 3.3. In FLEX cases, present a c.a. 15% reduction in OPEX due to adjustments in production, see Section 3.1. While excess fossil-based chemicals are assumed to be treated as waste, their impact on the total cluster OPEX is minor, c.a. 3% of total OPEX across scenarios.

4.3 Costs and revenues

The deployment of ACS processes reshapes the cluster's structure, changing inputs and outputs and impacting material and energy costs as well as revenues (Figure 8). In the INFLEX scenario, the costs of materials and energy are 33% and 35% lower, respectively,

than those of the fossil-based cluster. This largely results from the removal of upstream processes with high input material requirements, such as ethylbenzene (E2), terephthalic acid (A3), ethylene oxide (E1), ethylene glycol (E3), and aromatics (A1). Reduced material costs also result, in part, from lower costs of ACS feedstocks (e.g., biomass or glycerol). In the FLEX 30% scenario, adjustments in upstream production enable additional reductions in material and energy costs, up to c.a. 14% and 23%, respectively, compared to the INFLEX scenario. In FEED and LAND scenarios, processes are added, resulting in c.a. 4% higher material costs. However, energy costs remain c.a. 6% lower compared to the INFLEX scenario. Partly, this is due to the removal of energy-intensive upstream processes, and partly to the lower energy requirement, so the ACS processes selected by the model.

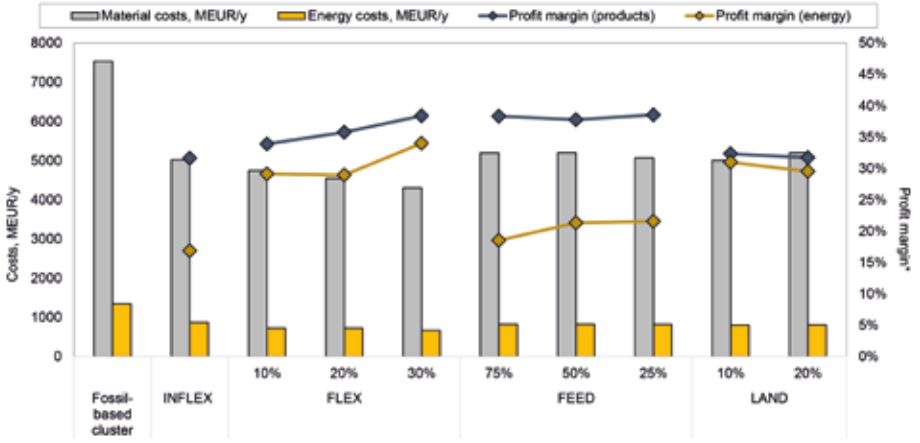

*Profit margin is the percentage of profit from revenue.

Figure 8. Costs and revenues per scenario. Values are calculated based on the data in Appendix E. Scenarios presented are INFLEX – inflexible conditions; FLEX – operational flexibility; FEED – feedstock availability; and LAND – land availability.

In the FLEX cases, revenues are up to 5% lower than in INFLEX, see Appendix E. However, in FEED 75% and FEED 50%, revenues are up to 15% higher, driven by the excess of MEG production. LAND cases show, on average, a 5% increase in revenues. Note that the model is set to match the production demand of the DDs, while the overproduction of byproducts from ACS processes is not constrained. Therefore, approximately 5% of the revenue across ACS scenarios originates from excess ACS byproducts, such as bio-MEG or PG.

Despite the revenues of the FLEX cases being lower, the profit margins of the products and energy are 5 and 15% higher than those of the INFLEX, see Figure 8. This results from adjustments to the cluster's production, where costs decrease faster than revenues. The FEED scenario shows the highest product profit margin across cases, c.a. 6-7%, as their ACS portfolios enable additional revenue from MEG and PG production. However, increased LLPS and cooling water requirements in bio-based processes result in a

profit margin similar to that of INFLEX. In the LAND scenario, across cases, product profit margins are similar because the process portfolios are alike. Still, energy profit margins remain c.a. 14% higher than in INFLEX, majorly driven by the excess steam production from waste-to-styrene processes.

4.4 Capital expenditures and land requirements

CAPEX across scenarios is 7-9% higher compared to INFLEX and reflects the number and scale of ACS technologies included in the selected portfolio, see Figure 9. Across cases, these requirements are c.a. 10-12% of the total cluster's land. Although the percentage may seem relatively small, this parameter is often overlooked, and deploying ACS technologies can still pose a significant challenge in congested clusters.

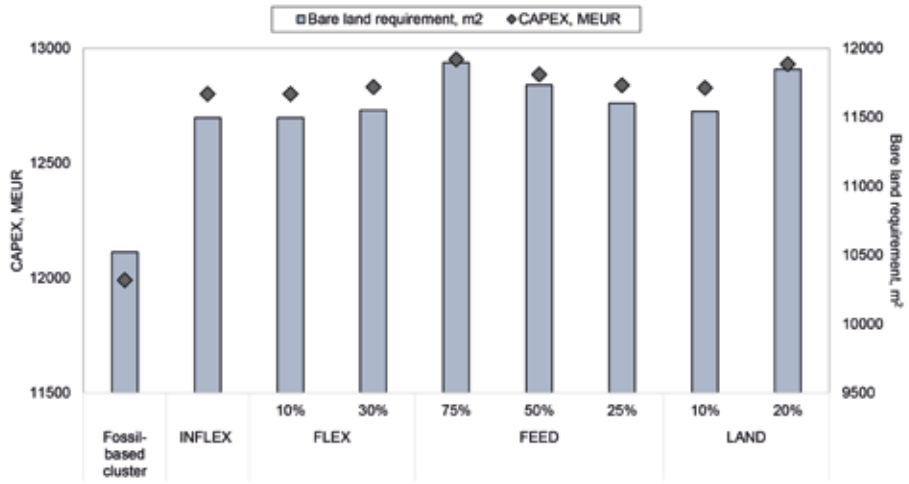

Figure 9. CAPEX and bare land requirement per scenario. Values are calculated based on the data in Appendix E. The bare land requirement indicator only looks at the equipment footprint and does not account for any land use outside the system boundaries. Scenarios presented are INFLEX – inflexible conditions; FLEX – operational flexibility; FEED – feedstock availability; and LAND – land availability.

4.5 CO_2 emissions and water consumption

Scope 1 emissions across scenarios are just below those of the fossil-based cluster, see Figure 10. Although the aromatics (A1) process was removed in all scenarios, this results in only a c.a. 6% reduction in Scope 1 CO_2 emissions across all cases. This is due to the process relying heavily on external energy supply rather than on-site production. Scope 1 CO_2 emissions across FEED and LAND cases show up to 3-5% increase compared to the INFLEX scenario, due to the portfolio of bio-based processes deployed, such as bio-PO, which uses on-site generation of heat and energy. With the adjusted production capacities in the FLEX scenario, results indicate a potential reduction in Scope 1 CO_2 emissions of up to 5% compared to the INFLEX scenario.

Across scenarios, Scope 2 CO_2 emissions are 2 times lower (Figure 10) than those of the fossil-based cluster, mainly due to the removal of fossil-based processes, leading to lower imports of steam and electricity. A major part of the Scope 2 CO_2 emissions comes from off-site steam generation, while emissions from electricity consumption are c.a 10%, see Appendix E. Note that if the utilities were also defossilised, total CO_2 emissions (Scope 1 and 2) would be 42% lower.

The total water consumption (TWC) of the fossil-based cluster, Appendix E, is mainly driven by process and cooling water, accounting for c.a. 43% and 52%, respectively. Across scenarios, TWC is, on average, 20% lower than the fossil-based cluster, primarily due to the 30% reduction in cooling water usage resulting from the removed processes. Process water varies slightly across scenarios, but it is not significantly lower compared to the fossil-based cluster, up to 5%. Scenarios with a larger number of bio-based processes in the ACS portfolio, such as FEED 75% and 50%, and LAND 20% and 30%, show slightly higher cooling water usage and wastewater production, up to 5%. Changes in operational flexibility (FLEX) have little impact on TWC, primarily because cooling water consumption varies only by 10%.

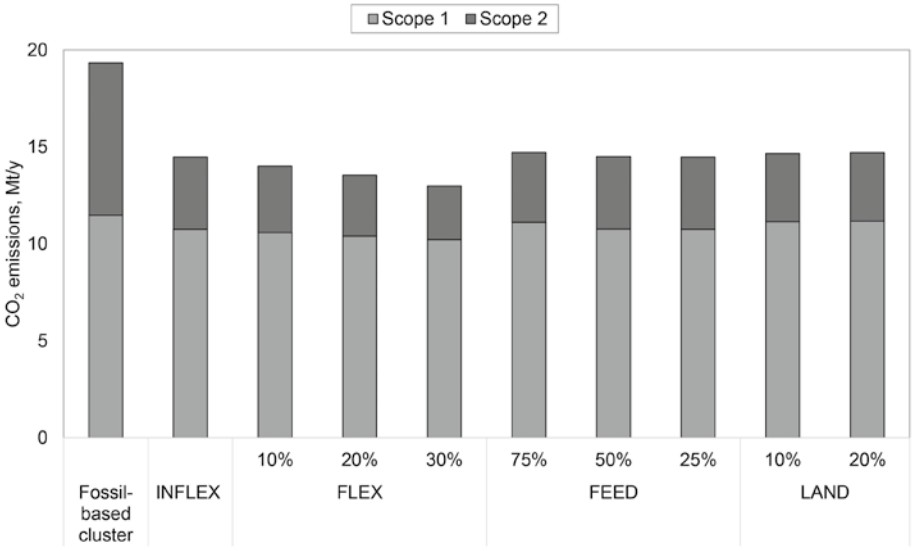

Figure 10. CO_2 emissions per scenario. Values are calculated based on the data in Appendix E. Scenarios presented are INFLEX – inflexible conditions; FLEX – operational flexibility; FEED – feedstock availability; and LAND – land availability.

Implications and limitations of the models

Process models of the representative cluster were developed based on open data on existing production capacities and interconnections present in the Port of Rotterdam. While many processes were identified and integrated, not all of the existing DD processes

were considered during model setup. For instance, the production of chemicals such as polypropylene, polyurethane, and MXDA were not included. Thus, introducing these processes would provide a better understanding of the system-level interactions. Depending on research developments, the portfolio of ACS technologies should be expanded as well, contributing to a further understanding of the defossilisation potential of the existing clusters.

In the current study, the maximum operational flexibility was assumed to be up to 30% from the existing production capacities within the cluster. Moreover, the superstructure model was developed to assume a linear response to changes in process production. However, the chemical processes are not linear, and the process configurations directly constrain their flexibility. Thus, the range of operational flexibility required for each process needs to be identified and considered, along with the potential implications of scaling down existing processes. Moreover, the model was set to match the fixed (current) market demand for DDs, to avoid potential fluctuations. In practice, it can vary. This aspect required further research.

This study assumes that all technologies are available at the same time for the model to be selected for deployment. However, technologies have different readiness levels (TRLs), which affect their availability. A more realistic approach would be beneficial to model a stepwise integration based on TRLs to better reflect deployment timing. Besides that, other optimisation objectives may be considered, such as the cluster's revenue and/or OPEX, to enable different defossilisation potentials and portfolios of ACS processes.

In addition, it should be assessed whether material flows can be reused within the cluster's existing infrastructure or whether an additional infrastructure is required. Currently, the CAPEX penalty does not include costs related to infrastructure modifications, which can affect the model's results. Finally, to reduce additional CAPEX, it is recommended to assess the potential to reuse equipment from removed processes within ACS processes.

5. CONCLUSIONS

Chapter 5 extends and advances the work presented in Chapter 4. Here, an additional analysis is conducted to examine the effects of variations in land and ACS feedstock availability, as well as the operational flexibility of process units, at the deployment of ACS processes within the cluster. For that, four scenarios are used: INFLEX – inflexible conditions; FLEX – operational flexibility; FEED – feedstock availability; and LAND – land availability.

A key observation across scenarios is that the defossilisation is driven by integrating a mix of ACS processes. PLGA and waste-to-styrene remain a stable combination across scenarios, as they demand minimal additional CAPEX (c.a. 5%) and land (c.a. 10%), allow-

ing them to replace carbon-intensive PET (E6) and styrene (P6) processes. Cascading impacts that arise significantly affect processes upstream, such as terephthalic acid (A3), ethylene oxide (E1), ethylbenzene (E2), and ethylene glycol (E3), resulting in the removal of aromatics (A1) and cutting demand from olefins (O1) production within the cluster by over 50%. Another combination that emerged is a mix of bio-MEG, bio-PG, and bio-PO processes, which significantly affects the PO/TBA production process and reshapes the propylene cluster. Moreover, selected ACS processes require low-cost feedstocks (e.g., plastic waste, glycerol) in smaller quantities than those required by fossil-based processes.

Across all the scenarios, c.a. 50% defossilisation of the cluster is achievable. This is mainly due to the removal of aromatics (A1), which results in 45% less fossil-based carbon entering the cluster. Adjusting upstream production reduces imports of fossil-based chemicals, fostering the cluster's defossilisation to up to c.a. 65% (i.e., FLEX 30%) and leading to c.a. 10-20% reductions across TEE indicators, i.e., OPEX, CO_2 emissions, and TWC. Results from the other two scenarios show that, even with lower feedstock availability (FEED 25%) or only a 10% expansion of the cluster's land (LAND 10%), defossilisation of the cluster remains possible. Under constrained ACS feedstock supply (FEED 50% and FEED 25%), the number of bio-based processes is 2-3 times lower compared to INFLEX or FLEX 75%, while the selection of waste- and CO_2-based processes remains unaffected. This is because the initial ACS feedstock requirements for those processes to produce the same amounts of DDs than in the pretrochemical cluster are well below 30% of the waste plastic and CO_2 availability in the Netherlands.

Across scenarios, a particular aspect requiring additional examination is the overproduction of fossil-based chemicals, c.a. 930 kt/y, which is no longer needed for downstream production. Although the FLEX scenario shows the potential to reduce overproduction by half (FLEX 30%), it remains unknown whether processes can adjust their production in line with their existing techno-economic constraints. Thus, the fate of excess fossil-based chemicals should be examined and considered. Results from the current study show that additional assessments are still required to be done on: (i) the potential of using equipment and infrastructure from the removed fossil-based processes; and (ii) examining defossilisation of the cluster under different objectives for the optimisation, such as the cluster's revenue and/or OPEX.

SUPPLEMENTARY DATA

Supplementary data for this Chapter can be found in Appendixes A and E.

6. REFERENCES

(1) EC. *Chemicals Strategy for Sustainability towards a Toxic-Free Environment*; Brussels, 2020.

(2) IEA. *Chemicals*. https://www.iea.org/energy-system/industry/chemicals (accessed 2025-04-08).

(3) Carus, M.; Dammer, L.; Raschka, A.; Skoczinski, P.; Vom Berg, C. *Renewable Carbon – Key to a Sustainable and Future-Oriented Chemical and Plastic Industry*; Hürth, Germany, 2020. www.bio-based.eu/nova-papers.

(4) Posada, J. A.; Patel, A. D.; Roes, A.; Blok, K.; Faaij, A. P. C.; Patel, M. K. Potential of Bioethanol as a Chemical Building Block for Biorefineries: Preliminary Sustainability Assessment of 12 Bioethanol-Based Products. *Bioresour. Technol.* **2013**, *135*, 490–499. https://doi.org/10.1016/j.biortech.2012.09.058.

(5) Moncada, J.; Posada, J. A.; Ramírez, A. Comparative Early Stage Assessment of Multiproduct Biorefinery Systems: An Application to the Isobutanol Platform. *Bioresour. Technol.* **2017**, *241*, 44–53. https://doi.org/10.1016/j.biortech.2017.05.074.

(6) Yong Min Fen, C. Deep Decarbonisation of the Dutch Chemical Industry: A Marginal Abatement Cost Curve Analysis for LyondellBasell. **2020**, No. August.

(7) Tan, M.; Nikolic, I.; Ramírez, A. R. Superstructure-Based Optimization Framework to Assess Defossilization Pathways in Petrochemical Clusters. *Chem. Eng. Sci.* **2026**, *321*, 122783. https://doi.org/10.1016/j.ces.2025.122783.

(8) Tan, M.; Ibarra-González, P.; Nikolic, I.; Ramírez Ramírez, A. Understanding the Level of Integration in Existing Chemical Clusters: Case Study in the Port of Rotterdam. *Circ. Econ. Sustain.* **2024**, No. submitted for review. https://doi.org/10.1007/s43615-024-00410-5.

(9) Avantium. *Portfolio of Technology Platforms and Products*. https://avantium.com/products-technologies.

(10) Rabou, L. P. L. M.; Deurwaarder, E. P.; Elbersen, H. W.; Scott, E. L. *Biomass in the Dutch Energy Infrastructure in 2030*; 2006.

(11) Snijder, L.; Nusselder, S. *Plasticgebruik En Verwerking van Plastic Afval in Nederland*; 2019.

(12) CBS. *Half of electricity is produced from renewable sources*. https://www.cbs.nl/en-gb/news/2025/11/half-of-electricity-is-produced-from-renewable-sources#:~:text=Electricity generated from wind rose,that co-fire with biomass. (accessed 2025-10-25).

(13) Agentenergy. *ARGENT ENERGY LAUNCHES TECHNICAL-GRADE, BIO-BASED GLYCERINE FOR THE CHEMICAL MARKET*. https://www.argentenergy.com/news/argent-energy-launches-technical-grade-bio-based-glycerine/#:~:text=Argent Energy%2C a leading European,its Port of Amsterdam site. (accessed 2025-04-30).

(14) van Manen, J. Country Report: The Netherlands. *Law Policy Healthc. Financ. An Int. Comp. Model. Outcomes* **2019**, No. April, 359–385. https://doi.org/10.4337/9781788115926.00024.

(15) Khandelwal, M. *Decarbonisation Options for the Dutch Biofuels Industry*; 2020. www.pbl.nl/en.

(16) World Integrated Trade Solution. *Netherlands Glycerol (glycerine), crude, glycerol waters an imports by country in 2023*. https://wits.worldbank.org/trade/comtrade/en/country/NLD/year/2023/tradeflow/Imports/partner/ALL/product/152010 (accessed 2025-04-30).



CHAPTER 6

Conclusions and recommendations

1. CONCLUSIONS

The main contribution of the thesis lies in assessing alternative carbon source (ACS)-based routes for downstream derivative (DD) production when integrated into existing petrochemical clusters. While alternative routes are increasingly examined in literature at the process level, their deployment within interconnected clusters remains poorly understood, particularly with respect to the resulting changes in layout, upstream operations, utilities, and overall system performance. This dissertation examines how petrochemical clusters could respond to the defossilisation of downstream derivatives, focusing on system interactions, cascading effects, and changes in cluster performance. More specifically, the work identifies differences between current (fossil-based) and alternative industrial configurations and what those discrepancies imply for existing industrial clusters in terms of carbon flows, energy requirements, emissions, water consumption, and bare land requirements. The work uses a production-oriented or territorial-based approach as it allows to assess how the cluster changes when one process replaces another, including changes in by-products and their distribution within the cluster. With this purpose, a methodological framework was developed to:

- evaluate and compare ACS-based DD processes both as stand-alone units and as integrated components of a cluster;
- identify and interpret cascading effects triggered by their deployment; and
- assess changes in cluster-level techno-economic and environmental performance following integration.

The thesis applies this framework across clusters of different sizes in the Port of Rotterdam, enabling a structured analysis of defossilisation pathways under realistic brownfield conditions. This chapter consolidates the main outcomes of the research, synthesises conclusions related to the overarching objective, and situates the findings within their methodological and practical limitations.

1.1 Research outcomes

The overarching goal of this dissertation is ***to analyse to what extent and under what conditions defossilisation of downstream derivatives can affect system interactions and performance of a petrochemical cluster at different levels.*** To accomplish the main goal, we have defined two sub-goals. The section below provides a quick overview of results and conclusions for each sub-goal.

Research sub-goal 1

to evaluate and compare potential impacts of defossilising stand-alone and interlinked DDs value chains in a petrochemical cluster.

Most existing research on chemical defossilisation focuses on producing chemical building blocks (CBBs) from alternative carbon sources, which are then used to produce downstream products [1]. As a result, most alternative DD production routes rely on ACS-based building blocks [2], while fewer studies explore direct pathways [3]. In both cases, technologies are generally at low technology readiness levels (TRL), and their large-scale integration into existing clusters is rarely assessed. Stand-alone assessments often omit the influence of cluster interconnections, leaving key questions regarding cumulative impacts unanswered. In particular, the literature provides limited insight into how ACS-based DD processes affect cluster structure, upstream material flows, utilities, and system-wide performance [4,5]. Moreover, it remains unclear how potential synergies and trade-offs emerge, or how defossilisation can be implemented concurrently across different parts of an existing cluster [6].

To address these gaps, this research adopted an approach that distinguishes between small, medium, and large clusters, see Table 1, to reflect increasing degrees of integration and interaction. This approach enabled a systematic analysis of how individual and combined deployments of ACS-based DD processes influence the layouts and performance of different clusters.

Table 1. The cluster sizes used in the research are based on the number of processes and the levels of interconnection.

Chapter	Size	Cluster name	Number of fossil-based processes	Downstream derivative (s)	ACS-based processes deployment
2	Small	MTBE cluster	5	M6. Methyl tert-butyl ether (MTBE)	· Individual.
3	Medium	Propylene cluster	9	M6. MTBE P3. Propylene glycol methyl ethers (PGME) P31. Propylene glycol (PG) P4. Polyol	· Individual; · Simultaneous.
4 & 5	Large	Full cluster	52	M6. MTBE P3. PGME P31. PG P4. Polyol P6. Styrene (SM) E6. Polyethylene terephthalate (PET)	· Simultaneous.

Techno-economic and environmental key performance indicators (KPIs) were defined to support process- and cluster-level evaluation. Structural changes were analysed using graphical network representations of fossil-based and ACS-based clusters. For small and medium industrial clusters, these changes were identified through manual data mapping, whereas for the large cluster, an in-house superstructure optimisation model was used [7]. The optimisation prioritised reductions in fossil-based carbon input (first objective) over additional capital expenditure (CAPEX penalty), treated as a secondary objective.

Small cluster: single downstream derivative deployment

Chapter 2 explores the defossilisation of a single downstream derivative within a small MTBE cluster in the Port of Rotterdam, by replacing fossil-based isobutene with bio-isobutene (bio-IBN). At the process level, the analysis shows that full substitution of fossil carbon with biogenic carbon is feasible. However, the alternative process is currently economically unattractive due to its higher process complexity, resulting in c.a. 150 times higher CAPEX and 1.3 times higher operating expenditures (OPEX) compared to its fossil-based counterpart. In addition, its elevated energy demand results in total CO_2 emissions that can be c.a. 40 times higher than those of the fossil-based process if the heat and electricity supply are not decarbonised.

At the cluster level, deployment of the bio-isobutene process can substantially alter the existing layout. CAPEX required for the additional bio-IBN process is almost an order of magnitude higher than the total CAPEX of the existing fossil-based MTBE cluster. Energy and water demand would increase significantly, resulting in 61% of OPEX for the cluster, while total CO_2 emissions would be c.a. 2 times higher under the current energy mix, and land requirements would nearly double. These outcomes illustrate that defossilisation through process substitution alone can impose significant system penalties. The results also highlight the importance of explicitly accounting for land requirements, which are often overlooked in cluster-level assessments. While the findings provide valuable insights, they reflect the characteristics of a relatively simple system and cannot be generalised to more complex cluster configurations.

Medium cluster: individual versus simultaneous deployment

Chapter 3 extends the analysis to a medium-sized propylene cluster comprising nine processes, which is representative of conditions at the Port of Rotterdam. The chapter assesses four downstream derivatives under two deployment strategies: individual integration of ACS-based processes and their simultaneous deployment.

At the process level, all ACS-based routes provide partial or full defossilisation potential. Relatively simple pathways, such as CO_2-based polyols and bio-based propylene glycol (bio-PG), outperform their fossil-based counterparts. The operating costs of the CO_2-based polyol and bio-PG processes are 34% and 20% lower, respectively, than those of their fossil counterparts, primarily due to reduced or eliminated use of fossil-based propylene oxide (PO). However, when deployed individually at the cluster level, these processes expand the cluster layout and modify resource and energy requirements. In some cases, energy and water use decrease, resulting in lower Scope 2 emissions. Despite this, fossil-based carbon input remains largely unchanged, as individual integration of the ACS-based DDs does not alter the layout of the upstream units, which continue to operate to serve other downstream products. This leads to the overproduction of intermediate fossil-based chemicals (i.e., propylene, PO, tert-butyl alcohol (TBA)).

A fundamentally different outcome emerges when ACS-based processes are deployed simultaneously. Combined integration affects shared upstream units, creating cumulative cascading effects. In the propylene cluster, deploying CO_2-based polyol reduces upstream PO demand by 10%, while the bio-PG and bio-MTBE routes rely entirely on biogenic feedstocks. This results in a 38% reduction in upstream PO demand, strongly affecting PO/tert-butyl alcohol (TBA) production. Further integration of a bio-PO process results in the full elimination of fossil-based upstream units, including PO/TBA, C4 isomerisation, and olefin production, thereby converting the propylene cluster into a fully ACS-based system.

This transition entails extensive restructuring, with CAPEX c.a. 3 times higher than that of the fossil-based cluster. Moreover, the current configuration significantly alters energy use and product outputs relative to the fossil-based cluster, reshaping revenue streams and increasing product minimum selling prices (MSP). Changes in the cluster's product composition require total costs to be recovered from a smaller and restructured portfolio following the removal of fossil-based upstream units, resulting in MSPs that are c.a. 35% higher than those of the fossil-based cluster. Although Scope 1 emissions are now fully biogenic, Scope 2 emissions are highly dependent on the heat and electricity mix of the deployed processes, reinforcing the need to align material defossilisation with clean energy supply.

Large cluster: system-wide interactions after deployment

Chapter 4 examines the defossilisation of six downstream derivatives within a large, representative petrochemical cluster comprising 52 interconnected fossil-based processes. The analysis demonstrates that, unlike in less complex clusters, highly interconnected upstream units are progressively affected by changes in downstream demand. The integration of waste-to-styrene and CO_2-based polyol processes substantially reduces fossil carbon input by eliminating the need for terephthalic acid and aromatic production. In addition, it strongly alters the ethylene subcluster by removing three downstream processes, such as ethylene oxide, ethylbenzene, and ethylene glycol, thereby significantly affecting the downstream demand for olefin production.

Integrating bio-MEG, bio-PG, bio-PO, and bio-MTBE restructures the propylene subcluster by removing four core fossil-based processes (C4 isomerisation, PO/TBA, propylene glycol, and isobutene production), thereby reshaping the cluster's material and energy profiles. More than two-thirds of olefin output and around 40% of utility output become redundant. These results indicate that replacing fossil-based processes with ACS-based alternatives can significantly alter cluster production levels and require a reassessment of how surplus material flows are managed.

The results illustrate that, technically, defossilisation potential at the cluster level is governed by two interrelated factors: the degree of integration within downstream value chains and the combination of ACS technologies deployed. These findings confirm that stand-

alone process performance does not predict cluster-level outcomes. Meaningful defossilisation emerges only when deployment strategies are aligned with cluster structure and capable of influencing upstream production.

Research sub-goal 2

to identify and assess possible implications of defossilising DDs at a cluster level under varying conditions.

While simultaneous deployment of ACS-based downstream processes can trigger substantial cascading effects, it may also face practical constraints related to feedstock availability, land requirements, and the operational flexibility of existing units. Current research largely focuses on feedstock constraints for CBB production, often analysing single processes with fixed production volumes [8]. Equivalent assessments for downstream derivatives are scarce, despite their different scale, feedstock profiles, and integration characteristics. Similarly, land availability is frequently overlooked, even though spatial constraints pose a growing challenge for existing industrial clusters [9,10]. In addition, ACS-based processes modify upstream material demand, which can disrupt the operation of fossil-based units and strain their ability to adjust production levels [11].

To address these gaps, Chapter 5 extends the analysis through a scenario-based assessment of cluster defossilisation under explicit boundary conditions. Building on the representative large cluster developed in Chapter 4, the deployment of six ACS-based downstream processes was evaluated across four scenarios: inflexible operation (INFLEX), upstream operational flexibility (FLEX), constrained alternative feedstock availability (FEED), and limited land expansion (LAND). In the INFLEX and FLEX scenarios, ACS-based processes were deployed without feedstock or land constraints, with differences arising solely from upstream units' ability to adjust production. The FEED scenario imposed progressively tighter feedstock limits, whereas the LAND scenario restricted the land expansion available for new processes.

Across all scenarios, cluster defossilisation is driven by the combined deployment of ACS-based processes, rather than by isolated process substitutions. A configuration that consistently appears includes PLGA and waste-to-styrene routes, which require limited additional capital investment (c.a. 5%) and land (c.a. 10%), while replacing carbon-intensive PET and styrene production. Their integration generates strong cascading effects in upstream processes, leading to the removal of aromatic production and over fifty percent reduction in olefin demand. A second recurring configuration of bio-MEG, bio-PG, and bio-PO, restructures the propylene subcluster through a substantial reduction in PO/TBA production. Overall, these ACS-based process combinations rely on biomass and require, at the cluster level, smaller feedstock quantities than fossil-based routes to deliver equivalent levels of downstream production.

Under all scenarios, around 50% defossilisation of the cluster is achievable. This is mainly through the removal of aromatic production, which alone reduces fossil carbon input by approximately 45%. Allowing upstream units to adjust their production further enhances these outcomes, increasing defossilisation to about 65% under flexible operation and simultaneously lowering OPEX, CO_2 emissions, and total water consumption by 10–20%. Importantly, these results remain robust under stringent constraints on feedstock availability, as waste and CO_2-based routes are largely unaffected by such limitations. This is because the initial ACS feedstock requirements for those processes to produce the same amounts of DDs than in the pretrochemical cluster are well below 30% of the waste plastic in the Netherlands. However, the model indicates that the defossilised cluster would experience substantial overproduction (c.a. 930 kt/y) of fossil-based chemicals due to the reduced downstream demand in the cluster. The fate of these chemicals requires further study.

Scenario comparisons indicate that boundary conditions primarily affect technology selection rather than the feasibility of cluster defossilisation. Across all cases, similar combinations of ACS-based processes prevail, particularly those with low feedstock demand and strong upstream linkages (i.e., PLGA and waste-to-styrene process), which systematically affect chemical building blocks such as olefins and aromatics and amplify cascading defossilisation effects. Feedstock and land constraints do not prove limiting within the analysed ranges; instead, outcomes are governed by operational conditions within the cluster, with upstream flexibility acting as a key enabler. Overall, the results confirm that cluster-level defossilisation depends on coordinated portfolios of ACS-based processes rather than isolated substitutions.

Overarching conclusions related to the main goal

This dissertation set out to examine to what extent, and under which conditions, defossilisation of downstream derivatives reshapes system interactions and performance within petrochemical clusters. The results show that defossilisation outcomes at the cluster level cannot be derived from stand-alone process assessments alone. Instead, they depend on the cluster's structure, the combination of processes replaced, and the cascading effects that spread through interconnected units.

First, the analysis demonstrates that ACS-based downstream processes behave very differently when assessed in isolation than when integrated into an existing cluster. At the process level, many alternative routes perform well from a techno-economic and environmental perspective, often because they are smaller, require less feedstock, and use less land. However, once integrated, they alter material flows, energy use, and utility systems across the cluster. These changes can either reduce or reinforce the benefits observed at the process level, depending on how upstream units respond. This shows that technology assessments must go beyond individual processes and explicitly consider cluster-level interactions under brownfield conditions.

Second, the potential for defossilisation is closely linked to the degree of integration within the cluster. In simpler clusters, changing a single downstream derivative can trigger broad structural changes, resulting in strong cascading effects and higher defossilisation potential. In more complex and highly interconnected clusters, the system is more resistant to change. In such cases, meaningful defossilisation only occurs when several downstream derivatives are addressed simultaneously and when the selected ACS-based technologies affect shared upstream production units. Importantly, defossilisation depends less on the number of ACS processes deployed and more on their ability, individually or together, to reduce or replace fossil-based upstream production.

Third, the results show a clear, but not linear, relationship between cascading effects and cluster performance. Cascading impacts occur in three main ways: (i) adding processes without affecting upstream units, (ii) partially restructuring upstream production, or (iii) fully transforming the cluster. Each case involves trade-offs between CAPEX, OPEX, CO_2 emissions, bare land requirements, and energy demand. Stronger cascading effects do not automatically worsen performance. Instead, they redistribute costs and benefits across the cluster. When ACS-based processes outperform fossil-based ones and enable upstream substitution, the overall cluster can perform better than the fossil reference system.

Finally, limits related to land availability in the cluster, alternative feedstock supply, and operational flexibility do not prevent defossilisation but influence how it can be realised. ACS-based downstream processes generally require small amounts of feedstock and limited bare land, allowing substantial reductions in fossil carbon input even under restrictive conditions. Flexibility in upstream operations plays an important supporting role, as it allows fossil-based production to decrease when downstream demand falls. However, the feasibility of such adjustments depends on the techno-economic constraints of individual processes.

Overall, the findings show that up to 50% of the fossil-based carbon entering a petrochemical cluster can be replaced through targeted integration of ACS-based downstream technologies, without fully rebuilding the cluster. Achieving this requires coordinated deployment strategies that explicitly consider cluster structure, cascading effects, and system-level trade-offs, rather than focusing on isolated technology substitutions.

2. LIMITATIONS

This dissertation assesses the performance and impact of integrating ACS-based downstream technologies within an existing petrochemical cluster. As with any system-level analysis, the results are subject to methodological assumptions and modelling limitations, which are discussed below.

2.1.1 In-house cluster model

A representative cluster was constructed using available data on production capacities and interconnections in the Port of Rotterdam, the Netherlands [12]. Although a large number of processes and links were included, the model does not capture the full complexity of the real cluster. Several processes were excluded due to limited data availability, including polypropylene, polyurethane, and some downstream derivatives, like meta-xylylenediamine (MXDA). Incorporating these missing elements of the cluster structure would provide a more comprehensive representation of system interactions before and after defossilisation.

In addition, the representative cluster was modelled as a single system that adapts internally to downstream changes to pursue a common goal. In practice, petrochemical clusters comprise multiple independent firms, often distributed across different sites, and each may pursue different goals. As cascading effects modify upstream demand, each firm faces strategic choices regarding production levels, alternative outlets, waste management, or portfolio restructuring. These decisions are shaped by firm-specific constraints, market and regulatory conditions, and strategic objectives. As a result, the cascading effects identified in this study represent system-level potential rather than guaranteed outcomes. Explicitly capturing actor behaviour would require extending the modelling framework beyond its current scope, for instance by linking it to agent-based models.

2.1.2 Selection and compatibility of ACS-based processes

The analysis considered a limited set of ACS-based DD production routes, with emphasis on direct pathways. Indirect routes were excluded due to time and data constraints. The work in this thesis does not aim to identify “the” optimal production routes, but rather it aims to identify and assess system-level cascading impacts for selected technologies. Broader insights could be gained by including a wider range of ACS pathways and feedstocks for each downstream derivative.

Moreover, the study assumes functional equivalence between ACS-based and fossil-based chemicals, particularly with respect to product purity and market compatibility. For instance, PLGA was treated as a full substitute for PET based on the literature evidence [13,14]. However, the long-term stability of PLGA under real-use conditions remains uncertain, and differences in residual impurities were observed during modelling. As downstream derivatives are often sold as final products, such variations may affect material properties, product quality, and market acceptance. These aspects, including regulatory conditions, were not included in the analyses, highlighting an important area for future work.

2.1.3 Process modelling, uncertainty, and operational flexibility

All processes were modelled under steadystate conditions using harmonised assumptions. Fossil-based processes were modelled using available industrial data as well as data from literature, while ACS-based processes were modelled using heuristic assumptions

and literature data due to their low TRL. Model accuracy was further limited by the lack of suitable unit operation models in Aspen Plus (v12) for some technologies, such as electrolysers and furnaces. Validation of ACS-based processes is also limited, since pilot- and demonstration-scale data are scarce or nonexistent. Although internal consistency checks were performed, experimental validation is required to verify the estimated performance.

Operational flexibility was assumed to be uniform across the selected units, allowing a maximum reduction in production of 30%. In practice, flexibility varies widely between processes, depending on their design and level of integration. A process-specific assessment of feasible operating ranges is needed to improve the robustness of future analyses.

2.1.4 Performance assessment

A key point of departure for the performance assessment was that the cluster follows an ambitious defossilisation target, minimising fossil feedstock use, while maximising the use of existing chemical plants. Therefore, in this study, it is assumed that any surplus of fossil-based chemicals generated after partial defossilisation cannot be sold and is therefore treated as waste. This represents a stringent, environmentally driven scenario in which fossil-derived products have no remaining market value. While this avoids shifting emissions outside the system boundary, it does not reflect short-term market and business conditions. Under this assumption, waste treatment costs in Chapter 5 were estimated at approximately 2% of the total OPEX of the defossilised cluster. If the surplus fossil-based chemicals could instead be sold, additional revenues of up to 880 MEUR/y could be achieved, indicating that the assumption about the treatment of excess production has a substantial impact on economic outcomes.

As this thesis adopts a production-oriented and territorial-based approach, an LCA was not conducted. The main limitation of this choice is that environmental impacts outside the defined cluster boundaries are not captured. This is likely to overlook potential shifts in environmental impacts to upstream or downstream parts of the value chain (happening outside the cluster). For instance, CO_2 emissions were assessed only for Scope 1 and Scope 2, while Scope 3 emissions were excluded. However, several ACS-based routes rely on large quantities of bio-based feedstocks, which, depending on the type, origin and mode of transport, can result in significant upstream emissions. For example, spruce biomass and glycerol requirements can result in a total of c.a. 1,350 $ktCO_{2_{eq}}$ according to [15]. This indicates that upstream emissions can be significant and that extending the system boundary to include Scope 3 emissions would be necessary to assess potential shifts in emissions across the value chain. Furthermore, the dependence of ACS-based routes on substantial amounts of bio-based feedstocks raises questions about sourcing feedstocks from international markets and the associated implications for agricultural land use in other regions, aspects that this study has not considered. Similar questions arise for plastic waste.

2.1.5 Superstructure-optimisation framework

The superstructure optimisation model relies on several simplifying assumptions. Downstream demand was fixed to reflect current production levels, even though market demand is inherently variable. Production scaling was modelled as linear, despite the well-known non-linear behaviour in chemical processes. Moreover, the model assumes unrestricted internal redistribution of surplus chemicals within the cluster, without accounting for infrastructure constraints or associated costs. Therefore, CAPEX estimates exclude investments for piping and retrofitting, and do not account for the potential reuse of equipment from decommissioned units. These simplifications may influence both technology selection and economic outcomes.

In addition, all ACS-based technologies were assumed to be available for deployment at the same time, regardless of differences in their technological maturity (i.e., TRL). A more realistic representation would require phased technology deployment based on TRL. Besides this, other optimisation objectives can be considered, such as the cluster's revenue and/or OPEX, to reflect real-world operating conditions of the clusters (i.e., business operational reality), while enabling different defossilisation potentials and portfolios of ACS processes. Exploring these aspects could reveal different defossilisation pathways and portfolios of ACS-based technologies.

Finally, the model treats the cluster as a single, integrated system, whereas in reality, industrial clusters comprise multiple independent companies with distinct goals and decision-making processes. Future research could address this by including company-level decision-making and agent-based modelling.

3. RECOMMENDATIONS

The chemical industry remains a strategically important sector in Europe, but is under growing pressure to remain competitive while decarbonising its energy use and defossilising production. This thesis specifically focuses on the chemical industry of the Port of Rotterdam as a reference case study for the analysis. The results of this dissertation indicate that defossilising downstream derivatives is feasible, provided that assessments move beyond greenfield assumptions and explicitly account for existing brownfield conditions.

Future research should therefore prioritise the comparative assessment of technology portfolios, rather than isolated process substitutions. Identifying which combinations of ACS-based routes interact most effectively within existing clusters is essential for defining robust defossilisation strategies. This requires explicit modelling of real interconnections, shared utilities, and competition for feedstocks, rather than assuming independent deployment of individual technologies.

A key challenge identified is the overproduction of fossil-based upstream chemicals following cluster defossilisation. The long-term fate of these fossil-based surplus chemicals remains uncertain. While operational flexibility offers a potential mechanism to reduce upstream output, its feasibility depends on technical constraints, economic incentives, and firm-level decisionmaking. Addressing this challenge will require, among others, integrating behavioural representations of industrial actors with detailed techno-economic analysis at the process and cluster levels.

Given the diversity of chemical clusters across Europe, additional comparative studies are needed to further understand which structural characteristics enable or constrain defossilisation. Establishing common patterns across clusters would support the broader applicability of the strategies explored in this dissertation. Moreover, the research can be extended to identify and coordinate defossilisation opportunities across interconnected clusters at multiple stages of the value chain, enabling simultaneous deployment of both ACS-based chemical building blocks and downstream derivatives.

Finally, the findings point to a broader structural transition in the chemical industry: a reduced reliance on chemical building blocks, achieved through the direct production of downstream derivatives from alternative carbon sources. This shift may alter industrial layouts and accelerate decentralisation. At the same time, coupling strategies, such as reusing CO_2 from upstream processes, offer pathways to maintain integration while reducing fossil dependence. Exploring these alternatives will be crucial for understanding how defossilisation may reshape the future chemical industry.

4. REFERENCES

(1) Moncada, J.; Posada, J. A.; Ramírez, A. Early Sustainability Assessment for Potential Configurations of Integrated Biorefineries. Screening of Bio-based Derivatives from Platform Chemicals. *Biofuels, Bioprod. Biorefining* **2015**, *9* (6), 722–748. https://doi.org/10.1002/bbb.1580.

(2) Saygin, D.; Gielen, D. Zero-Emission Pathway for the Global Chemical and Petrochemical Sector. *Energies* **2021**, *14* (13), 3772. https://doi.org/10.3390/en14133772.

(3) De Jong, E.; Stichnothe, H.; Bell, G.; Jorgensen, H. *Bio-Based Chemicals: A 2020 Update*; 2020.

(4) Chen, X.; Dong, M.; Zhang, L.; Luan, X.; Cui, X.; Cui, Z. Comprehensive Evaluation of Environmental and Economic Benefits of Industrial Symbiosis in Industrial Parks. *J. Clean. Prod.* **2022**, *354* (March), 131635. https://doi.org/10.1016/j.jclepro.2022.131635.

(5) Ochieng, R.; Gebremedhin, A.; Sarker, S. Integration of Waste to Bioenergy Conversion Systems: A Critical Review. *Energies* **2022**, *15* (7), 2697. https://doi.org/10.3390/en15072697.

(6) Griffiths, S.; Sovacool, B. K.; Kim, J.; Bazilian, M.; Uratani, J. M. Decarbonizing the Oil Refining Industry: A Systematic Review of Sociotechnical Systems, Technological Innovations, and Policy Options. *Energy Res. Soc. Sci.* **2022**, *89* (January), 102542. https://doi.org/10.1016/j.erss.2022.102542.

(7) Tan, M.; Nikolic, I.; Ramírez, A. R. Superstructure-Based Optimization Framework to Assess Defossilization Pathways in Petrochemical Clusters. *Chem. Eng. Sci.* **2026**, *321*, 122783. https://doi.org/10.1016/j.ces.2025.122783.

(8) Carus, M.; Porc, O.; vom Berg, C.; Kempen, M.; Schier, F.; Tandetzki, J. *Is There Enough Biomass to Defossilise the Chemicals and Derived Materials Sector by 2050?*; Hürth, Germany, 2025. www.renewable-carbon-initiative.com.

(9) Government of the Netherlands. *Rotterdam Mainport development*. https://www.government.nl/topics/maritime-transport-and-seaports/development-of-rotterdam-hub-port#:~:text=The port of Rotterdam makes,parks along the Meuse river. (accessed 2025-06-18).

(10) Witte, P.; Wiegmans, B.; Louw, E. More Claims than Land: Multi-Facetted Land Use Challenges in the Port-City Interface. *J. Transp. Geogr.* **2025**, *124*, 104181. https://doi.org/10.1016/j.jtrangeo.2025.104181.

(11) Luo, J.; Pérez-Fortes, M.; Ibarra-Gonzalez, P.; Straathof, A. J. J.; Ramirez, A. Impact of Intermittent Electricity Supply on a Conceptual Process Design for Microbial Conversion of CO2 into Hexanoic Acid. *Chem. Eng. Res. Des.* **2024**, *205*, 364–375. https://doi.org/10.1016/j.cherd.2024.04.005.

(12) Ramirez, A.; Manalal, J. T.; Tan, M.; Stepchuk, I.; Ibarra González, P.; Pérez-Fortes, M. *UNRAVEL [Unraveling the impacts of using alternative raw materials in industrial clusters]*. Dataset. https://zenodo.org/communities/vici_unravel/records?q=&l=list&p=1&s=10&sort=newest.

(13) Gonella, S.; Huijbregts, M. A. J.; de Coninck, H.; de Gooyert, V.; Hanssen, S. V. Greenhouse Gas Reduction Potential of Novel CO 2 -Derived Polylactic- Co -Glycolic Acid (PLGA) Plastics. *ACS Sustain. Chem. Eng.* **2025**, *13* (16), 5798–5807. https://doi.org/10.1021/acssuschemeng.4c06463.

(14) Murcia Valderrama, M. A.; van Putten, R.-J.; Gruter, G.-J. M. PLGA Barrier Materials from CO 2 . The Influence of Lactide Co-Monomer on Glycolic Acid Polyesters. *ACS Appl. Polym. Mater.* **2020**, *2* (7), 2706–2718. https://doi.org/10.1021/acsapm.0c00315.

(15) EcoInvent. *EcoInvent Database*. Wood chips, wet, measured as dry mass {SE}| softwood forestry, spruce, sustainable forest management | Cut-off, S; Glycerine {RER}| market for glycerine | Cut-off, S; IPCC 2021 Global Warming Potential over a 100-year time horizon (GWP100). https://ecoinvent.org/ (accessed 2026-05-04).



APPENDIX

APPENDIX A

PROCESS DATA SHEETS

Table A.1. Detailed data sheets of the fossil- and ACS-based processes used in the superstructure-optimisation model

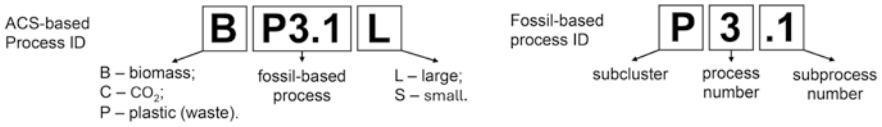

In-house model (Fossil-based process)				
ID	**Subcluster**	**Process**	**Capacity, kt/y**	**Zenodo DOI**
A1	Aromatics (A)	Aromatics	2,220 (Pygas)	10.5281/zenodo.14894694
A2		Cyclohexane	273	10.5281/zenodo.14905881
A3		Terephthalic acid (PTA)	347	10.5281/zenodo.14833721
B1	Bio-based (B)	Biodiesel	388	10.5281/zenodo.14910406
B2		Bioethanol	490	10.5281/zenodo.14910430
CL1	Chlorine (CL)	Chlorine / Sodium hydroxide (NaOH)	890	10.5281/zenodo.14905974
CL2		Phosgene	257	10.5281/zenodo.14906026
CL3		Methylene diphenyl diisocyanate (MDI)	204	
CL3.1		Methylenedianiline (MDA)	260	
CL4		Hydrochloric acid (HCl)	42	
CL5		Vinyl Chloride monomer (VCM)	612	10.5281/zenodo.14906115
CL6		Polyvinyl chloride (PVC)	470	10.5281/zenodo.14906161
CL7		Ethylene dichloride (EDC)	80	10.5281/zenodo.14906115
CL8		CKI (Chlorine circuit installation) Unit	137	10.5281/zenodo.14906217
E1	Ethylene (E)	Ethylene Oxide (EO)	200	10.5281/zenodo.14833785
E2		Ethylbenzene (EB)	758	10.5281/zenodo.14910309
E3		Ethylene Glycol (MEG)	113	10.5281/zenodo.14833785
E6		Polyethylene Terephthalate (PET)	231	10.5281/zenodo.14833721
M1	Methanol (M)	Methanol (MeOH)	90	10.5281/zenodo.14906262
M4		Dimethyl ether (DME)	65	10.5281/zenodo.14906453
M6.1		Isobutene	358	10.5281/zenodo.14825922
M6		Methyl tert-butyl ether (MTBE)	400	
M7		Formaldehyde	135	10.5281/zenodo.14906507
N7	Nitrogen (N)	Nitrobenzene (NB)	385	10.5281/zenodo.14910337
N8		Aniline	270	
O1	Olefins (O)	Olefins	3,000 (Naphtha)	10.5281/zenodo.14825234

Table A.1. Detailed data sheets of the fossil- and ACS-based processes used in the superstructure-optimisation model. (Continued)

In-house model (Fossil-based process)				
ID	**Subcluster**	**Process**	**Capacity, kt/y**	**Zenodo DOI**
P1.1	Propylene (P)	C4 isomerisation	549	10.5281/zenodo.14825844
P1		Propylene Oxide /Tert-butyl Alcohol (PO/TBA)	250(PO)/603(TBA)	
P3.1		Propylene Glycol (PG)	80	10.5281/zenodo.14906587
P3		Propylene Glycol Methyl Ether (PGME)	90	10.5281/zenodo.14906547
P4		Polyol	70	10.5281/zenodo.14906619
P6		Propylene Oxide / Styrene Monomer (PO/SM)	650 (SM) / 290 (PO)	10.5281/zenodo.14906685
P7		Isopropyl Alcohol (IPA)	167	10.5281/zenodo.14906804
P8		Acetone	50	10.5281/zenodo.14906893
U1	Utility (U)	Steam Methane Reforming (SMR)	100 (H_2)	10.5281/zenodo.15205929
U2		Air Separation Unit (ASU)	7,560 (Air)	10.5281/zenodo.15205968
U6		Waste-fired boiler (WFB)	1,671 (LLPS)	10.5281/zenodo.14825977
Deployed ACS-based process*				
ID	**ACS**	**Process**	**Capacity, kt/y**	Zenodo DOI
BE3	Bio-glycerol	Bio-Ethylene Glycol	L:113; S:35	10.5281/zenodo.14910592
BM6.1	Biomass	Bio-Isobutene	358	10.5281/zenodo.14826089
BP3.1	Bio-glycerol	Bio-Propylene Glycol	L: 80; S: 31	10.5281/zenodo.14910522
BP3.2	Bio-PG	Bio-Propylene Oxide	L: 60; S: 23	10.5281/zenodo.14910579
CE6	CO_2	Poly(lactic-co-glycolic) Acid (PLGA)	231	10.5281/zenodo.14911483
CP4	CO_2	CO_2-based polyol	70	10.5281/zenodo.14910447
PP6	Polystyrene waste	Plastic-based styrene	L: 325; S: 33	10.5281/zenodo.14910489

*A summary of the specifications and capacities of ACS processes is presented in Table A. 2.

Table A.2. Summary of the specifications and capacities of the ACS-based processes

ACS-based process deployed	ID	Capacity, kt/y	Specification	Fossil-based process replaced
CO_2-based polyol	CP4S	70	Polyol contains 23% of CO_2.	Polyol (P4)
	CP4L	70	Polyol contains 42% of CO_2.	
Bio-PG	BP31S	31	Bio-glycerol at its full capacity (40 kt/y) is supplied by Biodiesel (B1).	PG (P3.1)
	BP31L	80	It matches the production of fossil-based PG (P31).	
Bio-MEG	BE3S	35	It matches the production of fossil-based PG (P31).	MEG (E3)
	BE3L	113	It matches the production of fossil-based MEG (E3)	
Bio-PO	BP32S	23	Bio-PO is produced using all PG from BP31S.	N/A
	BP32L	60	Bio-PO is produced using all PG from BP31L.	
PLGA	CE6	231	Substitute for PET (from fossil fuel).	PET (E6)
Bio-IBN	BM61	358	It matches the production of fossil-based IBN (M6.1)	IBN (M6.1)
Styrene	PP6S	33	Capacity of a current demo plant [1]	Styrene / PO (P6)
	PP6L	325	It matches half of the production of fossil-based Styrene (P6)	

Input data for TEE assessment

Table A.3. Input data: Characteristics and prices (EUR2018) of utilities used. LLPS – very low-pressure steam; LPS – low-pressure steam; MPS – medium-pressure steam; HPS – high-pressure steam.

Utility type	Price	Ref.	T inlet, °C	T outlet, °C	P inlet, bar	P outlet, bar	Heat capacity, MJ/kg
LLPS	47 EUR/tonne	2	142.70	142.70	3.90	3.90	2.14
LPS	47 EUR/tonne	2	155.50	155.50	5.50	5.50	2.10
MPS	47 EUR/tonne	2	214.86	214.86	21.00	21.00	1.88
HPS	47 EUR/tonne	2	265.19	265.19	51.00	51.00	1.63
Cooling water	0.07 EUR/m^3	3	25.00	40.00	1.02	1.02	4.3
Electricity	0.084 EUR/ kWh	4	-	-	-	-	-

Table A.4. Input data: CO_2 emission rates for utility sources

Retrieved from the Aspen Plus models of utility processes described in [5]*						Defossilised**
	LLPS	LPS	MPS	HPS	Electricity	Steam / electricity
kt CO_2/TJ	0.11	0.17	0.19	0.22	0.14	0.01

* taking into account natural gas-based steam boilers;
**considering the Swedish power sector, data from [6].

REFERENCES

(1) agilyx. Company Presentation, 2022. https://www.agilyx.com/news-events/page/2/#posts.

(2) Intratec. *Steam costs | Current and forecast*. https://www.intratec.us/products/water-utility-costs/commodity/steam-cost (accessed 2023-10-20).

(3) Intratec. *Cooling water costs | Current and forecast*. https://www.intratec.us/products/water-utility-cost-database/commodity/cooling-water-cost (accessed 2023-10-20).

(4) Statista. *Prices of electricity for non-household consumers in the Netherlands from 2008 to 2022*. https://www-statista-com.tudelft.idm.oclc.org/statistics/596254/electricity-non-household-price-netherlands/ (accessed 2023-10-20).

(5) Tan, M.; Ibarra-González, P.; Nikolic, I.; Ramírez Ramírez, A. Understanding the Level of Integration in Existing Chemical Clusters: Case Study in the Port of Rotterdam. *Circ. Econ. Sustain.* **2024**, No. submitted for review. https://doi.org/10.1007/s43615-024-00410-5.

(6) EEA. *Greenhouse gas emission intensity of electricity generation in Europe*. https://www.eea.europa.eu/en/analysis/indicators/greenhouse-gas-emission-intensity-of-1 (accessed 2025-05-16).

APPENDIX B FOR CHAPTER 2

RESULTS FROM MODELLING AND TEE ASSESSMENT

Table B.1. Net power/heat requirements and cooling needs for fossil-based production processes inside fossil-based MTBE cluster retrieved from Aspen Plus models, see Appendix A, Table A.1. LLPS – very low-pressure steam; LPS – low-pressure steam; MPS – medium-pressure steam; HPS – high-pressure steam; PGME – propylene glycol methyl ether.

	Olefin production		C4 Isomerisation		PO/TBA production		Isobutene production		Waste fired boilers		MTBE production	
Utility type	**PJ/y**	**From / to***	**PJ/y**	**From / to***	**PJ/y**	**From / to***	**PJ/y**	**From / to***	**PJ/y**	**From / to***	**PJ/y**	**From / to***
LLPS	-	-	2	CHP	3.9	CHP + WFB + MTBE prod.	-	-	-3.6	PO/TBA prod.	-0.3	PO/TBA + PGME prod.
LPS	5.2	CHP	-	-	1.4	CHP	-	-	-		0.04	CHP
MPS	-3.5	M	0.25	CHP	0.4	CHP	0.6	CHP	-		-	
HPS	-6	M	-	-	-	-	-	-	-		0.4	CHP
Cooling water	28	M	2.5	M	9	M	0.5	M	-		16.6	
Electricity	7.6	CHP+M	0.4	CHP	0.8	CHP+M	0.04	CHP	0.13		3.1	CHP

* WFB – waste-fired boilers; CHP –combined heat and power plant inside the representative cluster; M –market.

Table B.2. Water consumption of production processes inside fossil-based MTBE cluster retrieved from Aspen Plus models, see see Appendix A, Table A.1.

Process	Process water, kt/y	Steam, kt/y	Cooling water, kt/y	Wastewater, kt/y
Olefin production	155	2,485	442,512	1,683
Isobutane production	0	1,073	39,451	0
PO/TBA production	45	892	144,221	48
Isobutene production	0	329	7,987	145
Waste fired boilers	1,671	0	0	0
MTBE production	5.4	277	264,784	0
Bio-IBN production	6,083	8,226	1,897,496	6,648

CALCULATION OF THE VC-HP INSTALLATION FOR THE SOLVENT AND RECOVERY UNIT

Table B.3. Problem statement for the VC-HP installation.

Input value	Abb.	Value	Source
Temperature of the heat sink	T_h	98.5 °C	Aspen Plus simulation
Temperature of the heat source	T_c	78.3 °C	Aspen Plus simulation
Thermal energy requirements	$Q_{Reboiler}$	127,845.9 TJ/y	Aspen Plus simulation
Carnot Efficiency	η_{Carnot}	50%	1
VC-HP bare equipment costs	IC	142 EUR/ kWth	2,3

1. Difference in the temperature profile of the column:

$$\Delta T_{column} = \frac{T_h - T_c}{2} = \frac{98.5 - 78.3}{2} = 10.1\ ^0C$$

2. Adjustment of the temperatures:

$$T_h^{'} = T_h + \Delta T_{column} = 98.5 + 10.1 = 108.6\ ^0C$$
$$T_c^{'} = T_c - \Delta T_{column} = 78.3 - 10.1 = 68.2\ ^0C$$

3. Coefficient of performance:

$$COP = \frac{T_h^{'}}{T_h^{'} - T_c^{'}} = \frac{108.6 + 273.15}{(108.6 + 273.15) - (68.2 + 273.15)} = 9.4$$

4. The real coefficient of performance:

$$COP_{real} = \eta_{Carnot} \cdot COP = 0.5 \cdot 9.4 = 4.7$$

5. The thermal energy demand of the columns:

$$Q_d = \frac{Q_{reboiler}}{3.6} = \frac{127{,}845.9 * 10^6}{8000 \cdot 3.6} = 4{,}439{,}094.4\ kW_{th}$$

6. The electricity demand for powering the compressor:

$$E_d = \frac{Q_d}{COP_{real}} = \frac{4{,}439{,}094.4}{4.7} = 940{,}811.7\ kW$$

7. Bare equipment costs of the VC-HP [2,3] :

$$Bare\ equipment_{VC-HP} = Q_d \cdot IC = 4{,}439{,}094.4 \cdot 142 \cdot 10^{-6} = 634.6\ \text{MEUR}$$

8. Installation costs of the VC-HP [2,3]:

$$Installation_{VC-HP} = 1.5 \cdot Bare\ equipment_{VC-HP} = 1.5 \cdot 634.6 = 952\ \text{MEUR}$$

9. Operation expenditures of the VC-HP are assumed to be equal to the cost of electricity used:

$$OPEX_{VC-HP} = 0.0836 \cdot E_d = 0.0836 \cdot 940{,}811.7 = 629.2\ \text{MEUR/y}$$

The chapter specific supplementary information (SI) are provided in the 4TU Research Data repository: https://doi.org/10.4121/356e7b5f-72e4-4801-98b4-bcb19f9accec. SI includes additionally:

- Literature review of the ACS-based routes to synthesise isobutene as feedstock for MTBE production;
- Input data for TEE assessment.

REFERENCES

(1) IndustrialHeatPumps.nl. *Coefficient of Performance*. https://industrialheatpumps.nl/english/operating_principle/cop_heat_pump/ (accessed 2024-10-16).
(2) De Raad, B.; Van Lieshout, M.; Stougie, L.; Ramirez, A. Identifying Techno-Economic Improvements for a Steam Generating Heat Pump with Exergy-Based Costs Minimization. In *36th International Conference on Efficiency, Cost, Optimization, Simulation and Environmental Impact of Energy Systems (ECOS 2023)*; ECOS 2023: Las Palmas De Gran Canaria, Spain, 2023; pp 884–895. https://doi.org/10.52202/069564-0080.
(3) TNO. *ESDL Energy Data Repository*. https://edr.hesi.energy/cat/Assets (accessed 2024-10-16).

APPENDIX C FOR CHAPTER 3

INPUT DATA FOR THE TEE ASSESSMENT

Table C.1. Salvage value of the removed equipment.

Indicator	Definition	Formula	Data inputs	Ref.
Salvage value	The fraction of the original CAPEX at the end of the plant life.	$S_V = CAPEX \cdot (1-i)^{sl}$	· i – rate of the depreciation; · sl – total number of years of service life, assumed 25 years; · $CAPEX$– capital expenditures in the fossil-based value chain, MEUR.	1,2

CALCULATION OF THE ALLOCATION FACTORS

The formula for allocation follows Equation (9) in [3] and reads as follows (Equation 1):

$$Af = \frac{\text{Revenue}_i^{product}}{\sum_{i=1}^{n}\text{Revenue}_i^{product}} = \frac{\text{Price}_i^{product} \cdot \text{mass flow}_i^{product}}{\sum_{i=1}^{n}\text{Price}_i^{product} \cdot \text{mass flow}_i^{product}} \quad (1)$$

Table C.2. Allocation factors for the assessment at the process level. The allocation factor is assigned at the process level, incorporating all products, byproducts, and utilities as components of the total revenue. For details on processes, refer to the Appendix A, Tables A.1 and A.2.

Production process	Feedstock	Product	Name	To unit	Allocation factor
Olefin production	fossil	main	Propylene	to PO/TBA	0.06
C4 Isomerisation	fossil	main	Isobutane	to PO/TBA	1
PO/TBA production	fossil	main	PO	to polyol	0.1
				to PG	0.1
				to PGME	0.1
				market	0.06
	fossil	byproduct	TBA	to isobutene	0.54
				market	0.11
Isobutene production	fossil	main	Isobutene	to MTBE	0.73
				market	0.27
Waste-fired boilers	fossil	utility	LLPS	to PO/TBA	1
MTBE production	fossil	main	MTBE	market	1
Polyol production	fossil	main	Polyol	market	1
PG production	fossil	main	PG	market	0.9
		byproduct	D-PG	market	0.08
		byproduct	T-PG	market	0.01
PGME production	fossil	main	PGME	market	0.85
		byproduct	T-PGME	market	0.11
		byproduct	D-PGME	market	0.04
Polyol production	ACS	main	Polyol	market	1

Table C.2. Allocation factors for the assessment at the process level. The allocation factor is assigned at the process level, incorporating all products, byproducts, and utilities as components of the total revenue. (Continued)

Production process	Feedstock	Product	Name	To unit	Allocation factor
PG production	ACS	main	PG	market	0.96
		byproduct	Methanol	market	0.01
		byproduct	Ethylene glycol	market	0.04
Isobutene production	ACS	main	Isobutene	to MTBE	0.45
				market	0.17
		byproduct	CO_2	market	0.05
		byproduct	Furfural	market	0.07
		byproduct	Butenes	market	0.01
		utility	LLPS	market	0.18
		utility	LPS	market	0.04
		utility	HPS	market	0.02

RESULTS FROM MODELLING AND TEE ASSESSMENT

Table C.3. Power and heat requirements and cooling needs for the production processes. LLPS – very low-pressure steam; LPS – low-pressure steam; MPS – medium-pressure steam; HPS – high-pressure steam. For details on processes, refer to the Appendix A, Tables A.1 and A.2.

	LLPS	LPS	MPS	HPS	Cooling water	Electricity
Process	**TJ/y**	**TJ/y**	**TJ/y**	**TJ/y**	**TJ/y**	**TJ/y**
Fossil-based						
Olefin production	1,500	5,208	-	-	27,696	7,546
C4 Isomerisation	2,009	-	249	-	2,469	359
PO/TBA production	41	1,373	408	-	9,027	757
Isobutene production	-	-	618	-	500	40
WF boilers	-	-	-	-	-	-
Polyol production	36	5	-	-	158	-
PG production	-	-	799	7	800	2
PGME production	15	-	503	5	677	1
MTBE production	-	38	-	414	231	3
ACS-based						
CO_2-based Polyol production	-	9	-	-	64	10
Bio-PG production	17	-	659	-	493	-
Bio-IBN production	-	-	5,439	-	119,542	28,751
Bio-PO production	82	-	74	-	291	18

Table C.4. Power and heat excess for the production processes. LLPS – very low-pressure steam; LPS – low-pressure steam; MPS – medium-pressure steam; HPS – high-pressure steam; HHPS – very high-pressure steam. For details on processes, refer to the Appendix A, Tables A.1 and A.2.

	LLPS	LPS	MPS	HPS	HHPS	Sent to
Process	**TJ/y**	**TJ/y**	**TJ/y**	**TJ/y**	**TJ/y**	
Fossil-based						
Olefin production	-	-	3,461	5,970	1,714	market
C4 Isomerisation	-	-	-	-	-	-
PO/TBA production	-	-	-	-	-	-
Isobutene production	-	-	-	-	-	-
WF boilers	3,568	-	-	-	-	PO/TBA production
Polyol production	-	-	-	-	-	-
PG production	90	7	-	-	-	market
PGME production	-	1	-	-	-	market
MTBE production	40	-	-	-	-	PGME production
	23	-	-	-	-	market
	249	-	-	-	-	PO/TBA production
ACS-based						
CO_2-based Polyol production	-	-	-	-	-	-
Bio-PG production	-	300	-	-	-	market
Bio-IBN production	7,759	1583	-	621	-	market
Bio-PO production	-	-	-	-	-	-

Table C.5. Carbon feedstock entering the processes. The calculation was performed using indicators (see Chapter 2) employing the data from the processes (see Appendix A, Tables A.1 and A.2).

	C_F	C_F
Process	**kt/y**	**kt/y**
Fossil-based	stand-alone	part of the cluster
Olefin production	3,228	3,228
C4 Isomerisation	476	399
PO/TBA production	619	1
Isobutene production	318	0
WF boilers	91	42
Polyol production	43	1
PG production	42	0
PGME production	58	14
MTBE production	281	57
ACS-based		
CO_2-based Polyol production	34	8
Bio-PG production	40	40
Bio-IBN production	2,034	2,034
Bio-PO production	17	0

Table C.6. CAPEX and OPEX of the processes. The calculation was performed using indicators (see Chapter 2) employing the data from the processes (see Appendix A, Tables A.1 and A.2).

	CAPEX	OPEX	OPEX
Process	**MEUR**	**MEUR/y**	**MEUR/y**
Fossil-based		stand-alone	part of the cluster
Olefin production	1,130	2,900	2,900
C4 Isomerisation	37	361	309
PO/TBA production	129	1,040	107
Isobutene production	16	665	23
WF boilers	139	36	36
Polyol production	2	121	5
PG production	25	143	26
PGME production	26	156	34
MTBE production	26	520	78
ACS-based			
CO_2-based Polyol production	22	80	8
Bio-PG production	33	119	80
Bio-IBN production	2,430	1,366	1,366
Bio-PO production	13	132	10

Table C.7. Revenue of the processes. Processes are considered to be a part of the cluster. The calculation was performed using data from the processes data sheets (see Appendix A, Tables A.1 and A.2).

	Products	Energy generated
Process	**MEUR/y**	**MEUR/y**
Fossil-based		
Olefin production	2,453	299
C4 Isomerisation	0	0
PO/TBA production	192	0
Isobutene production	156	0
WF boilers	0	0
Polyol production	123	0
PG production	128	2
PGME production	154	0
MTBE production	412	1
ACS-based		
CO_2-based Polyol production	123	0
Bio-PG production	122	7
Bio-IBN production	284	224
Bio-PO production	65	0

Table C.8. Environmental indicators of the processes. The calculation was performed using indicators (see Chapter 2) employing the data from the processes (see Appendix A, Tables A.1 and A.2).

	CO_2 emissions		TWC	TL*
Process	**Scope 1**	**Scope 2**		
Fossil-based	kt/y	kt/y	kt/y	m^2
Olefin production	1,836	2,048	7,943	1,316
C4 Isomerisation	98	308	1,057	181
PO/TBA production	0	416	3,105	542
Isobutene production	0	122	97	46
WF boilers	297	0	1,671	112
Polyol production	0	4.6	55	8
PG production	0	153	383	75
PGME production	0	98	286	85
MTBE production	0	97	147	70
ACS-based				
CO_2-based Polyol production	0.5	3	21	15
Bio-PG production	0	127	228	81
Bio-IBN production	3,562	4,862	39,441	4,145
Bio-PO production	13	25	93	52

*The indicator only looks at equipment footprint and does not account for any land use outside the system boundaries.

The chapter specific supplementary information (SI) are provided in the 4TU Research Data repository: https://doi.org/10.4121/356e7b5f-72e4-4801-98b4-bcb19f9accec. SI includes additionally:

- Literature review of the ACS-based routes to synthesise isobutene as feedstock for MTBE production, polyol, propylene glycol and propylene oxide;
- Input data for TEE assessment;
- Sensitivity analysis of the economic calculations for the ACS-based processes used in the assessment;
- Structural changes and mass balances after defossilisation.

REFERENCES

(1) MCG Quantity. *ATO Depreciation - Effective Lives (2017-2018)*. https://www.mcgqs.com.au/ato-effective-lives-2017-2018-depreciation-rates/ (accessed 2024-08-29).

(2) EY. *Worldwide Capital and Fixed Assets Guide*; 2018. https://assets.ey.com/content/dam/ey-sites/ey-com/en_gl/topics/tax/guides/worldwide-capital-and-fixed-assets-guide-2018.pdf (accessed 2024-08-29).

(3) Manalal, J. T.; Pérez-Fortes, M.; Gonzalez, P. I.; Ramirez, A. R. Evaluation of Alternative Carbon Based Ethylene Production in a Petrochemical Cluster: Technology Screening & Value Chain Impact Assessment; 2023; pp 2453–2458. https://doi.org/10.1016/B978-0-443-15274-0.50390-5.

APPENDIX D FOR CHAPTER 4

SUPERSTRUCTURE OPTIMISATION MODEL

The superstructure optimisation model was developed in the framework of the now VI.C.183.010 project. The model considers a combination of ACS-based processes and their potential integration into the cluster's existing layout. It enables the stepwise deployment of ACS processes within the existing process layout, while accounting for how earlier decisions can limit future options. Thus, a range of solutions for the petrochemical cluster's configurations is produced. Solutions are generated in a Pareto front, using the ε-constraint method, and are ranked via the Technique for Order of Preference by Similarity to Ideal Solution (TOPSIS) approach [1,2]. For further details, please refer to [3].

GRAPHICAL REPRESENTATION OF THE MODEL

The Figure D. 1 depicts a schematic representation of the superstructure. The feedstocks, products, processes, utility generation units (i.e., steam methane reforming (SMR) and air separation unit (ASU)), energy sinks, and energy sources are presented in the form of nodes; for more details, please refer to Table D. 1.

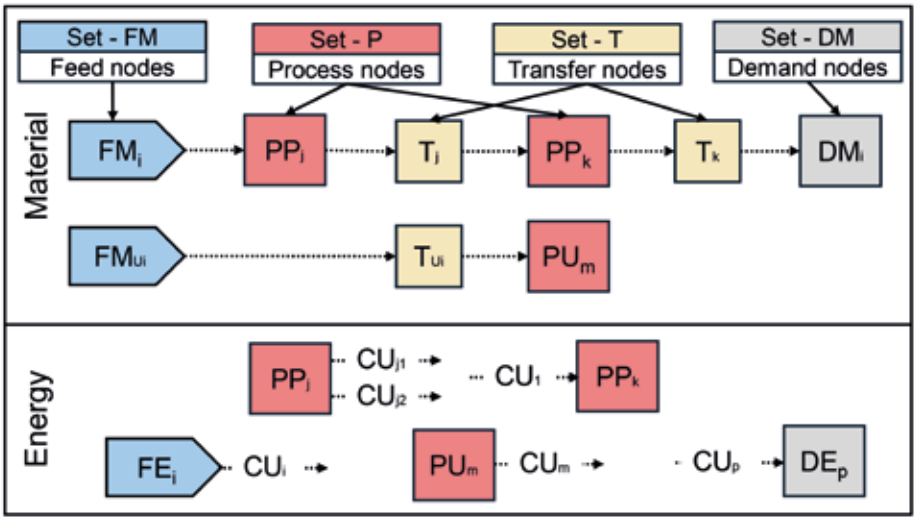

Figure D.1. Schematic representation of the superstructure model used in this work. FM and FE - material and energy feed nodes; PP - chemical process nodes; PU - utility process nodes; CU - utility components; T - transfer nodes; DM and DE - material and energy demand nodes. Subscripts of different nodes correspond to the numbering of the nodes among other nodes.

The interconnections between the nodes are illustrated as links, such as chemical CC (e.g., ethylene, propylene) and utility CU (e.g., LPS, electricity) components. The superstructure consists of two layers: material and energy. A material layer is defined by the four components: feed (FM), process (P), transfer (T), and demand nodes (DM). While the feed nodes

represent material feedstocks entering the system, the demand nodes correspond to the end points of value chains (i.e., final and intermediate products supplied to the market). The energy layer optimises the energy exchange by balancing energy supply (FE) and demand (DE). Energy feed nodes are used exclusively to supplement energy when utility generation units are unable to produce enough.

The material interconnections within the material layer mimic the pre-existing value chains in the petrochemical cluster. The transfer nodes distribute chemicals between process and/or demand nodes. The material and energy feed nodes represent the import of carbon feedstock into the system. The material demand nodes are set to match the market demand for potential products (i.e., final and intermediate products). Note that in reality, processes are parts of different companies, which can be located far apart, challenging the sharing of the energy flows between them [4]. To address this point, the model allows for optimising energy use between the processes within the same company sites. Only then can the excess energy be exported to others. Each company was assigned to a specific site within the cluster, which is geographically separated. As a result, heat exchange is limited to companies co-located at the same site. This constraint further shapes the feasible energy-sharing configuration within the cluster.

Table D.1. Sets used in the model's mathematical representation.

Set / Subset	Description	Link to the set / subset*	Set / Subset	Description	Link to the set / subset
T	Transfer nodes	$\mathbf{T} \subset \mathbf{B}$	$\mathbf{PP}_{\mathbf{Fossil}}$	Fossil-based chemical processes	$\mathbf{PP}_{\mathrm{Fossil}} \subset \mathbf{PP}$
P	Process nodes	$\mathbf{P} \subset \mathbf{B}$	$\mathbf{PP}_{\mathbf{ACS}}$	ACS-based chemical processes	$\mathbf{PP}_{\mathrm{ACS}} \subset \mathbf{PP}$
D	Demand nodes	$\mathbf{D} \subset \mathbf{B}$	$\mathbf{PU}_{\mathbf{Fossil}}$	Fossil-based utility generation processes	$\mathbf{PU}_{\mathrm{Fossil}} \subset \mathbf{PU}$
F	Feed nodes	$\mathbf{F} \subset \mathbf{B}$	$\mathbf{PU}_{\mathbf{ACS}}$	Electricity-based utility generation processes	$\mathbf{PU}_{\mathrm{Electric}} \subset \mathbf{PU}$
PP	Chemical processes	$\mathbf{PP} \subset \mathbf{P}$	**DM**	Material demand nodes	$\mathbf{DM} \subset \mathbf{D}$
PU	Utility generation processes	$\mathbf{PU} \subset \mathbf{P}$	**DE**	Energy demand nodes	$\mathbf{DE} \subset \mathbf{D}$
FM	Material feed nodes	$\mathbf{FM} \subset \mathbf{F}$	**FE**	Energy source nodes	$\mathbf{FE} \subset \mathbf{F}$

* Set B corresponds to all nodes.

OBJECTIVES OF THE MODEL

The main goal of the work is to defossilise the existing cluster; thus, the first objective of the model is set to minimise the import of fossil-based carbon into the cluster using equation D.1:

$$\min \sum_{f \in \mathbf{FM}_{FC}} Feed_f^{Mass} \, m_f^{Carbon} \qquad D.1$$

where, FM – stands for the set of material feed (fossil-carbon) nodes entering the system, $Feed_f^{Mass}$ corresponds to the mass flow rate of material provided by the feed node f, and m_f^{Carbon} is the carbon mass fraction.

The cluster has an existing infrastructure; thus, the second objective of the superstructure optimisation model was set to minimise CAPEX, assuming the cluster then utilises as much as possible the existing infrastructure D.2:

$$\min \left(\sum_{p \in \mathbf{PP}_{Fossil}} \left(1 - p_p^I\right) CAPEX_p + \sum_{p \in \mathbf{PU}_{Fossil}} \left(1 - p_p^I\right) CAPEX_p + \sum_{p \in \mathbf{PP}_{ACS}} p_p^I \cdot CAPEX_p \right) D.2$$

where, $CAPEX_p$ stands for the total CAPEX for the constructing process p, and p_p^I represents a process integer value indicating the number of instances of process *p* installed. The first two terms of equation D.2 represent the penalty for removing existing fossil-based processes based on their total CAPEX, while the third term represents the CAPEX required to install a new ACS-based process.

A multi-objective optimisation approach evaluates the trade-offs between both competing objectives, prioritising defossilisation over CAPEX, prioritising one over the other with a 5:1 weight ratio. A Pareto front is generated using the improved version of an augmented *ε*-constraint method, AUGMECON2 [1], which considers a standard multi-objective optimisation approach, assuming perfect foresight and availability of all ACS-based processes in the solution space. The *ε*-constraint grid spacing was limited to 20 solutions per model run. After the Pareto front is generated, the TOPSIS method is used to select the most favourable cluster configuration [1,2]. The model was implemented in Pyomo [5,6] and solved using Gurobi 11.0.0 [7].

CONSTRAINTS OF THE MODEL

The feedstocks and auxiliary chemicals required for production were assumed to be purchased from the market, and where applicable, from ACS-based origins (e.g., ethanol, methanol, glycerol). The model allowed chemicals and/or utilities produced in excess to be utilised by other downstream processes within the cluster. Products not used in the cluster were assumed to be sold to the market, without accounting for storage costs. The model must fulfil the DDs production demand of the fossil-based representative cluster (see Appendix A, Tables A.1 and A.2).

OPTIMISATION RESULTS: STRUCTURAL CHANGES

Table D.2. Changes in the existing structure of the representative cluster. The table shows the processes removed (in red) and those that remain in the cluster (in green).

Process ID	Prodution process	Sol 1	Sol 2	Sol 3	Sol 4	Sol 5	Sol 6	Sol 7	Sol 8	Sol 9
A1	Aromatics									
A2	Cyclohexane									
A3	Terephthalic acid (PTA)									
B1	Biodiesel									
B2	Bioethanol									
CL1	Chlorine / Sodium hydroxide (NaOH)									
CL2	Phosgene									
CL3	Methylene diphenyl diisocyanate (MDI)									
CL3.1	Methylenedianiline (MDA)									
CL4	Hydrochloric acid (HCl)									
CL5	Vinyl Chloride monomer (VCM)									
CL6	Polyvinyl chloride (PVC)									
CL8	CKI (Chlorine circuit installation) Unit									
E1	Ethylene Oxide (EO)									
E2	Ethylbenzene (EB)									
E3	Ethylene Glycol (MEG)									
E6	Polyethylene Terephthalate (PET)									
M1	Methanol (MeOH)									
M4	Dimethyl ether (DME)									
M6.1	Isobutene									
M6	Methyl tert-butyl ether (MTBE)									

Table D.2. Changes in the existing structure of the representative cluster. The table shows the processes removed (in red) and those that remain in the cluster (in green). (Continued)

Process ID	Prodution process	Sol 1	Sol 2	Sol 3	Sol 4	Sol 5	Sol 6	Sol 7	Sol 8	Sol 9
M7	Formaline									
N7	Nitrobenzene (NB)									
N8	Aniline									
O1	Olefins									
P1.1	C4 isomerisation									
P1	Propylene Oxide / Tert-butyl Alcohol (PO/TBA)									
P3	Propylene Glycol Methyl Ether (PGME)									
P3.1	Propylene Glycol (PG)									
P4	Polyol									
P6	Propylene Oxide / Styrene Monomer (PO/SM)									
P7	Isopropyl Alcohol (IPA)									
P8	Acetone									
U1	Steam Methane Reforming (SMR)									
U2	Air Separation Unit (ASU)									
U6 - 1	Waste-fired boiler (WFB)									
U6 - 2	Waste-fired boiler (WFB)									

Table D.3. Portfolio of the ACS-based technologies deployed within the representative cluster (type and number of plants). For more details on the processes, refer to the Appendix A, Tables A.1 and A.2.

Process ID	Prodution process	Capacity, kt/y	Land, m²	Sol 1	Sol 2	Sol 3	Sol 4	Sol 5	Sol 6	Sol 7	Sol 8	Sol 9
BE3L	Biomass - MEG	113	204	0	0	0	0	0	0	0	0	1
BE3S	Biomass - MEG	35	107	0	1	0	1	1	0	0	2	1
BM61	Biomass - IBN	358	4,145	0	0	0	1	1	0	0	0	0
BP31L	Biomass - PG	80	81	0	3	0	3	3	0	0	0	0
BP31S	Biomass - PG	31	55	0	0	0	0	0	0	0	0	0
BP32L	PG - PO	60	52	0	3	0	3	3	0	0	1	2
BP32S	PG - PO	23	29	0	0	0	0	0	0	0	0	3
CE6	CO_2- PLGA	231	182	1	1	1	1	1	0	0	0	0
CP4L	CO_2 (42%) - Polyol	70	16	0	0	0	0	0	0	0	0	0
CP4S	CO_2 (23%) - Polyol	70	13	0	0	0	0	0	0	0	0	0
PP6L	Waste - Styrene	325	396	2	2	2	2	2	0	0	2	2
PP6S	Waste - Styrene	33	77	0	0	0	0	0	0	1	0	0

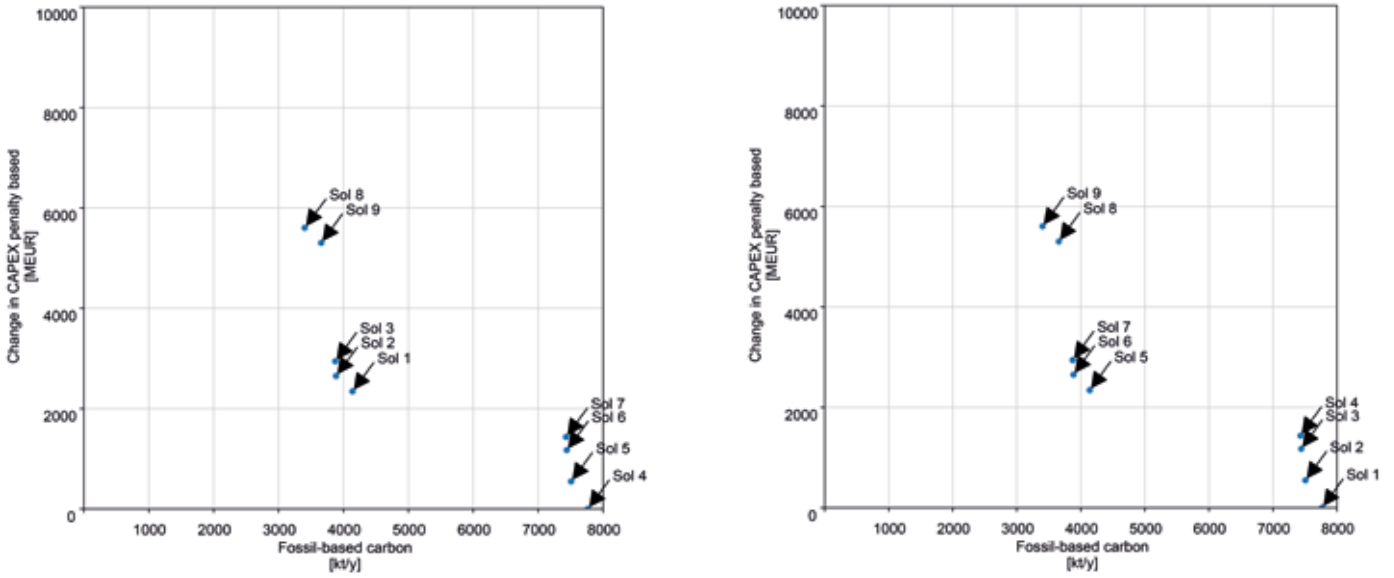

(a) (b)

Figure D.2. Changes in the Pareto front of the optimisation resulting from different objective weight (OW) settings between defossilisation and CAPEX in the model: (a) 4:2 weight ratio; (b) 3:3 weight ratio.

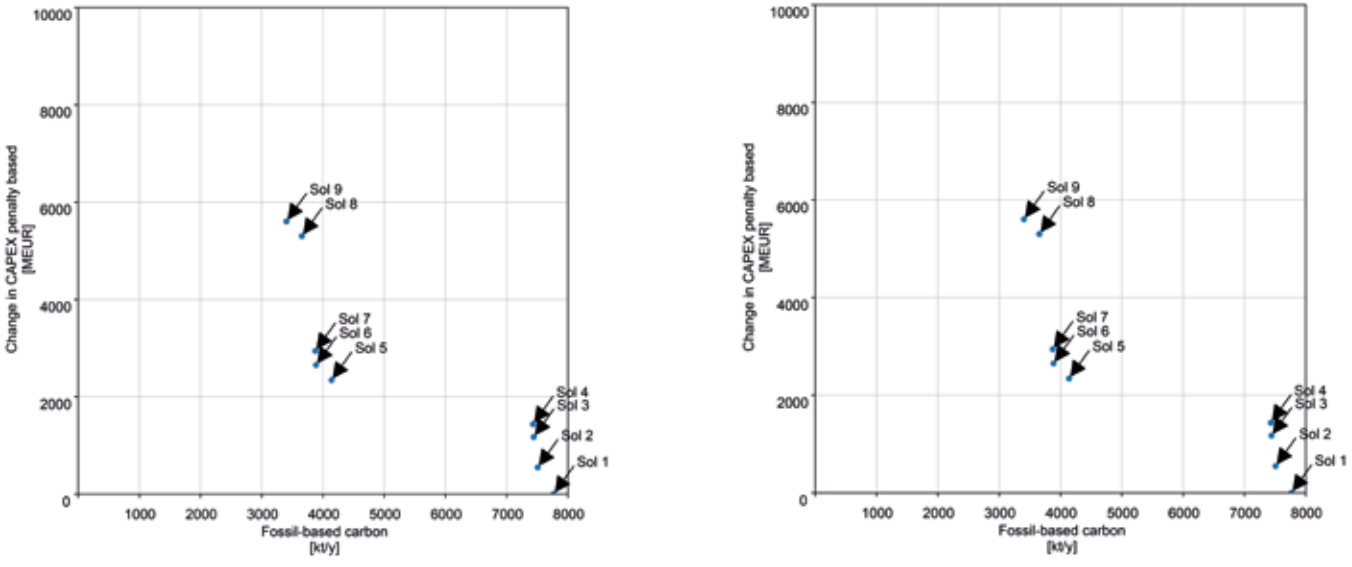

(c) (d)

Figure D.2. Changes in the Pareto front of the optimisation resulting from different objective weight (OW) settings between defossilisation and CAPEX in the model: (c) 2:4 weight ratio; (d) 1:5 weight ratio. (Continued)

Table D.4. Changes in the ACS-based technology portfolio resulting from different objective weight (OW) settings between defossilisation and CAPEX in the model.

Process ID	Prodution process	OW	Sol 1	Sol 2	Sol 3	Sol 4	Sol 5	Sol 6	Sol 7	Sol 8	Sol 9
BE3L	Biomass - MEG	5/1	0	0	0	0	0	0	0	0	1
		4/2	0	0	0	0	0	0	1	0	0
		3/3	0	0	0	1	0	0	0	0	0
		2/4	0	0	0	1	0	0	0	0	0
		1/5	0	0	0	1	0	0	0	0	0
BE3S	Biomass - MEG	5/1	0	1	0	1	1	0	0	2	1
		4/2	0	0	1	0	0	2	1	1	1
		3/3	0	0	2	1	0	0	1	1	1
		2/4	0	0	2	1	0	0	1	1	1
		1/5	0	0	2	1	0	0	1	1	1
BM61	Biomass - IBN	5/1	0	0	0	1	1	0	0	0	0
		4/2	0	0	0	0	0	0	0	1	1
		3/3	0	0	0	0	0	0	0	1	1
		2/4	0	0	0	0	0	0	0	1	1
		1/5	0	0	0	0	0	0	0	1	1
BP31L	Biomass - PG	5/1	0	3	0	3	3	0	0	0	0
		4/2	0	0	3	0	0	0	0	3	3
		3/3	0	0	0	0	0	0	3	3	3
		2/4	0	0	0	0	0	0	3	3	3
		1/5	0	0	0	0	0	0	3	3	3
BP31S	Biomass - PG	5/1	0	0	0	0	0	0	0	0	0
		4/2	0	0	0	0	0	0	0	0	0
		3/3	0	0	0	0	0	0	0	0	0
		2/4	0	0	0	0	0	0	0	0	0
		1/5	0	0	0	0	0	0	0	0	0
BP32L	PG - PO	5/1	0	3	0	3	3	0	0	1	2
		4/2	0	0	2	0	0	1	3	3	1
		3/3	0	0	1	3	0	0	2	1	3
		2/4	0	0	1	3	0	0	2	1	3
		1/5	0	0	1	3	0	0	2	1	3
BP32S	PG - PO	5/1	0	0	0	0	0	0	0	0	3
		4/2	0	0	5	0	0	0	3	0	5
		3/3	0	0	0	3	0	0	5	5	0
		2/4	0	0	0	3	0	0	5	5	0
		1/5	0	0	0	3	0	0	5	5	0
CE6	CO_2- PLGA	5/1	1	1	1	1	1	0	0	0	0
		4/2	1	1	1	0	0	0	0	1	1
		3/3	0	0	0	0	1	1	1	1	1
		2/4	0	0	0	0	1	1	1	1	1
		1/5	0	0	0	0	1	1	1	1	1

Table D.4. Changes in the ACS-based technology portfolio resulting from different objective weight (OW) settings between defossilisation and CAPEX in the model. (Continued)

Process ID	Prodution process	OW	Sol 1	Sol 2	Sol 3	Sol 4	Sol 5	Sol 6	Sol 7	Sol 8	Sol 9
CP4L	CO_2 (42%) - Polyol	5/1	0	0	0	0	0	0	0	0	0
		4/2	0	0	0	0	0	0	0	0	0
		3/3	0	0	0	0	0	0	0	0	0
		2/4	0	0	0	0	0	0	0	0	0
		1/5	0	0	0	0	0	0	0	0	0
CP4S	CO_2 (23%) - Polyol	5/1	0	0	0	0	0	0	0	0	0
		4/2	1	0	0	0	0	0	0	0	0
		3/3	0	0	0	0	1	0	0	0	0
		2/4	0	0	0	0	1	0	0	0	0
		1/5	0	0	0	0	1	0	0	0	0
PP6L	Waste - Styrene	5/1	2	2	2	2	2	0	0	2	2
		4/2	2	2	2	0	0	2	2	2	2
		3/3	0	0	2	2	2	2	2	2	2
		2/4	0	0	2	2	2	2	2	2	2
		1/5	0	0	2	2	2	2	2	2	2
PP6S	Waste - Styrene	5/1	0	0	0	0	0	0	1	0	0
		4/2	0	0	0	0	1	0	0	0	0
		3/3	0	1	0	0	0	0	0	0	0
		2/4	0	1	0	0	0	0	0	0	0
		1/5	0	1	0	0	0	0	0	0	0

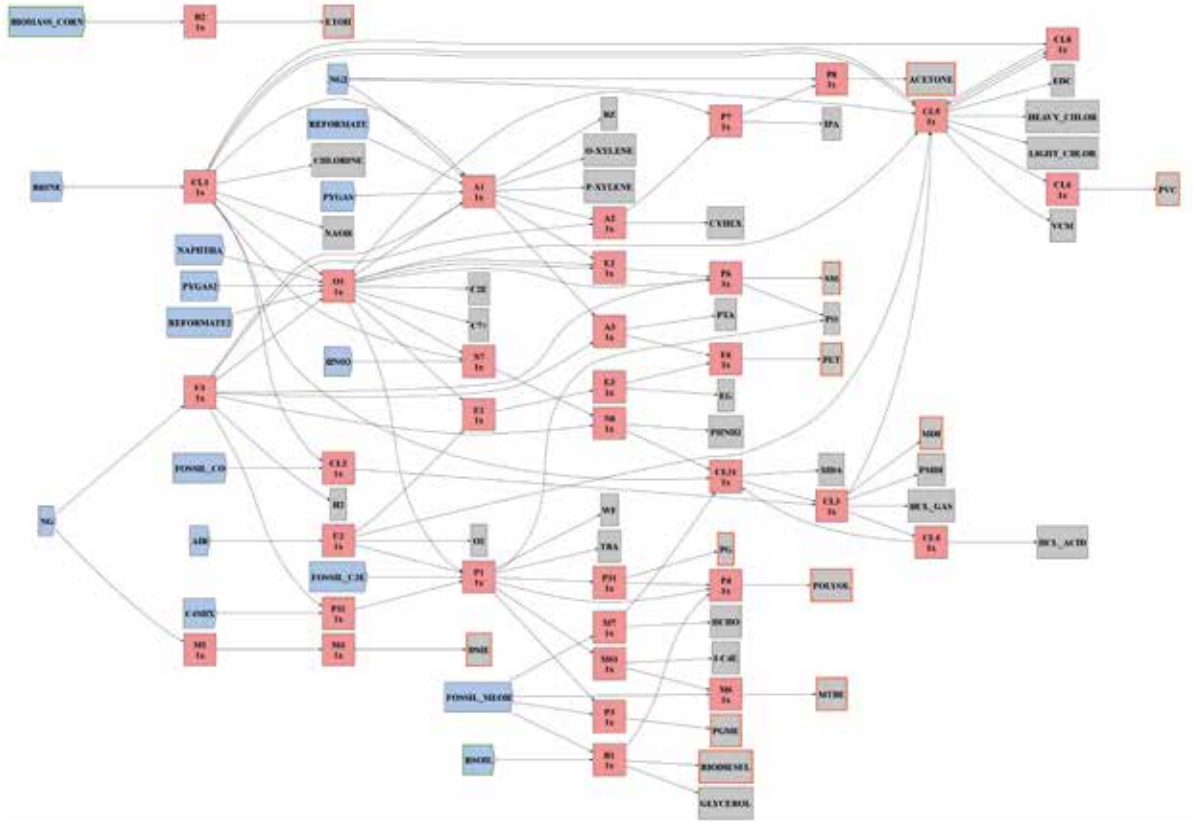

Figure D.3. Solution 6 (base case: fossil-based cluster) - Map of connections inside the representative cluster. For the list of processes and information on modelling, please refer to Appendix A, Tables A.1 and A.2. Processes corresponding to DDs are highlighted in a red square. Legend: Feed; Process; Demand (i.e., products and byproducts).

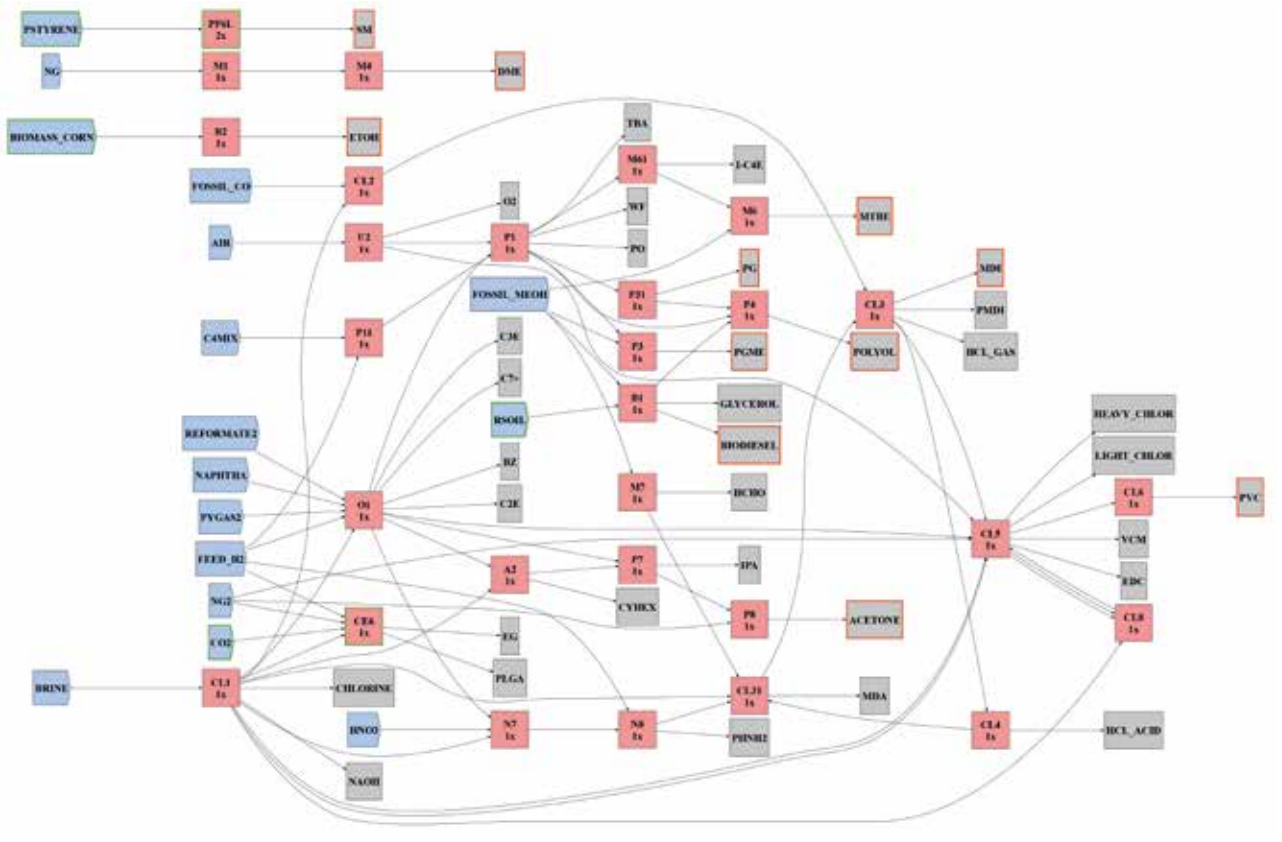

Figure D.4. Solution 1 - Map of connections inside the cluster when implementing ACS-based processes. See the list of processes and the number of plants deployed and removed, also in Table D. 2. and Table D. 2. Changes in the existing structure of the representative cluster. Legend: Feed; Process; Demand (i.e., products and byproducts). (Continued)

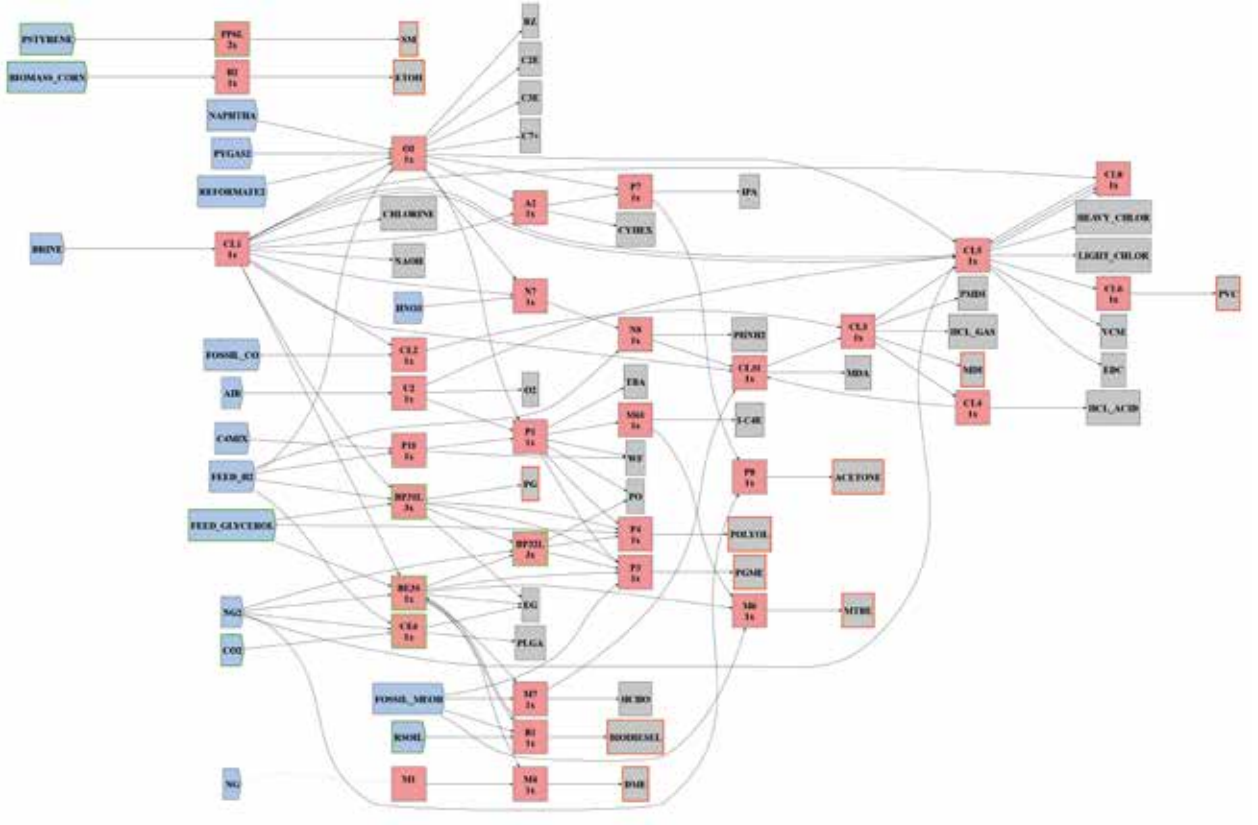

Figure D.5. Solution 2 - Map of connections inside the ACS representative cluster. See the list of processes and the number of plants deployed and removed, also in Table D. 2. and Table D. 2. Changes in the existing structure of the representative cluster. Legend: ☐ Feed; ☐ Process; ☐ Demand (i.e., products and byproducts). (Continued)

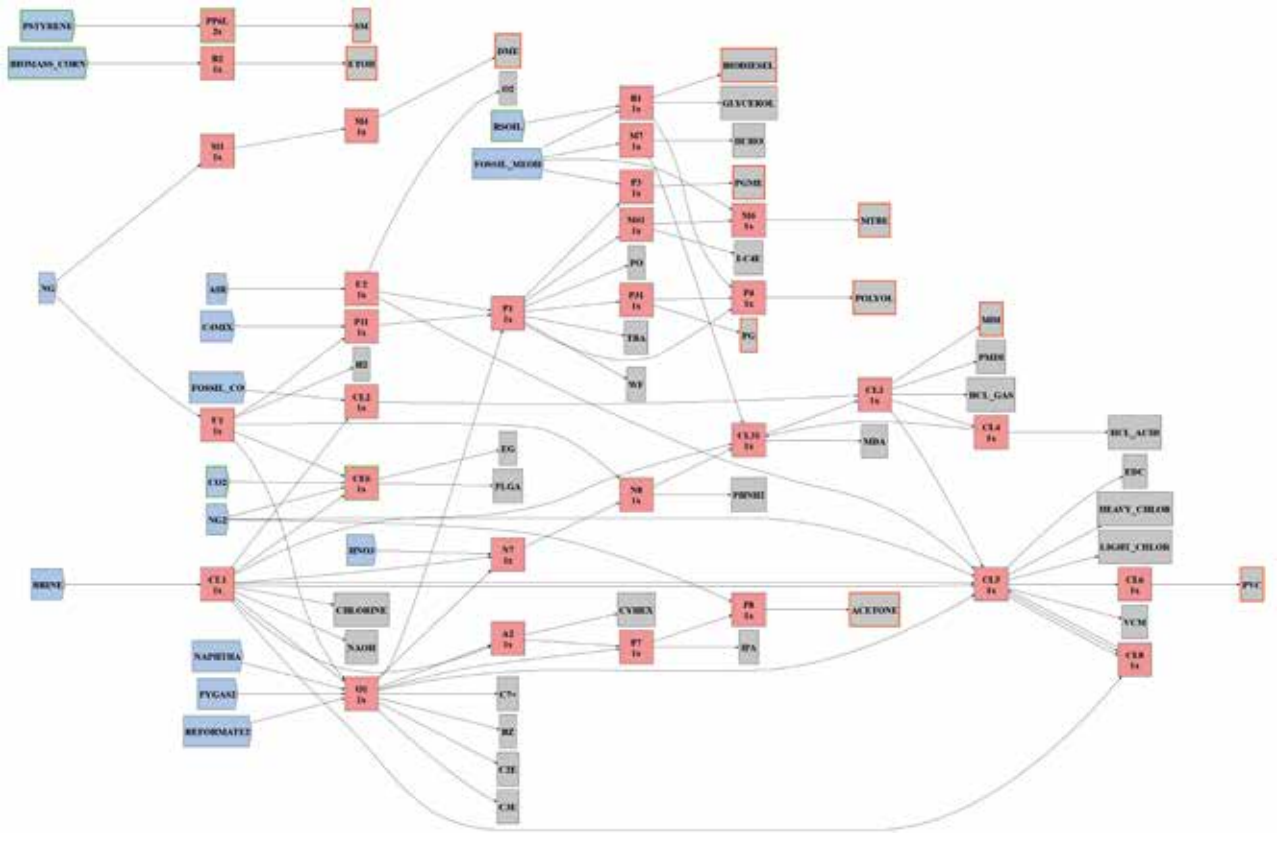

Figure D.6. Solution 3 - Map of connections inside the ACS representative cluster. See the list of processes and the number of plants deployed and removed, also in Table D. 2. and Table D. 2. Changes in the existing structure of the representative cluster. Legend: ☐ Feed; ☐ Process; ☐ Demand (i.e., products and byproducts). (Continued)

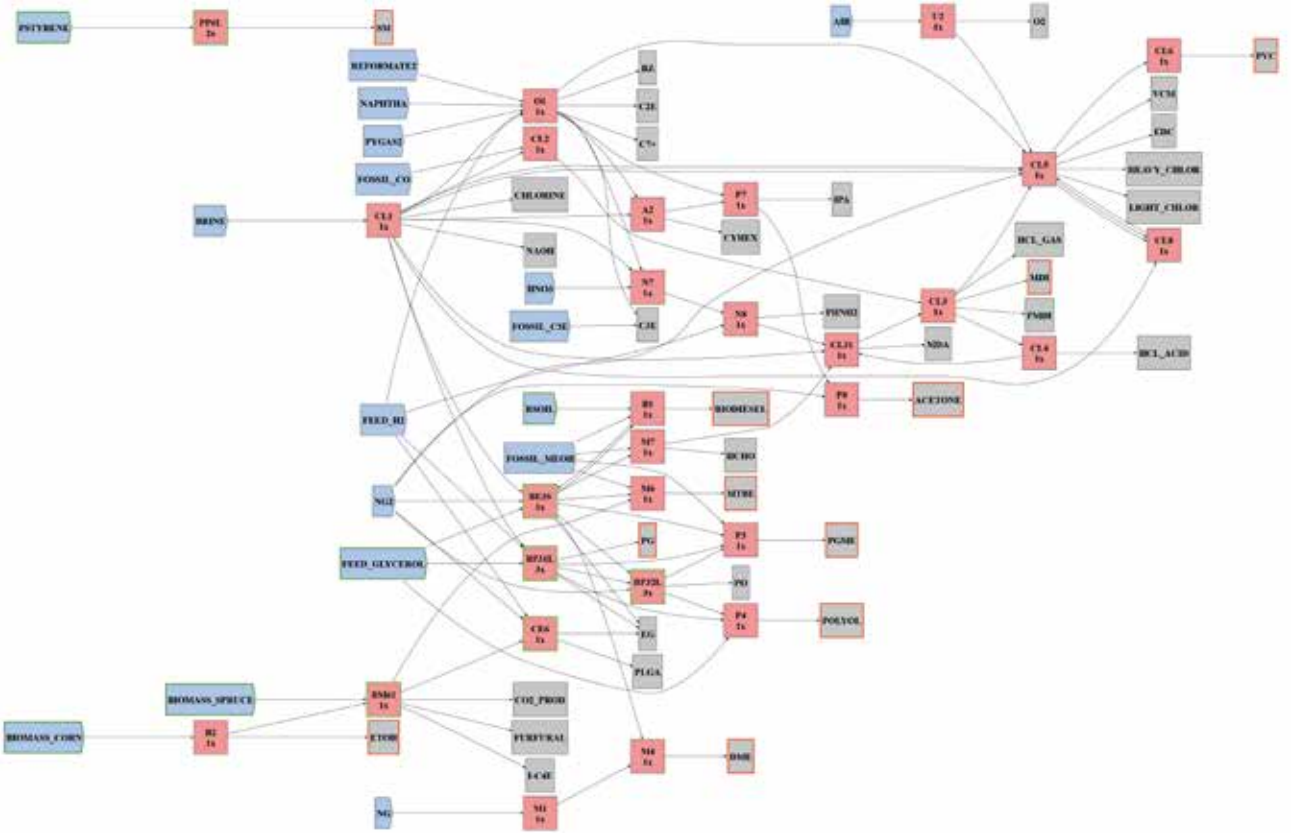

Figure D.7. Solution 4 - Map of connections inside the ACS representative cluster. See the list of processes and the number of plants deployed and removed, also in Table D. 2. and Table D. 2. Changes in the existing structure of the representative cluster. Legend: ☐ Feed; ☐ Process; ☐ Demand (i.e., products and byproducts). (Continued)

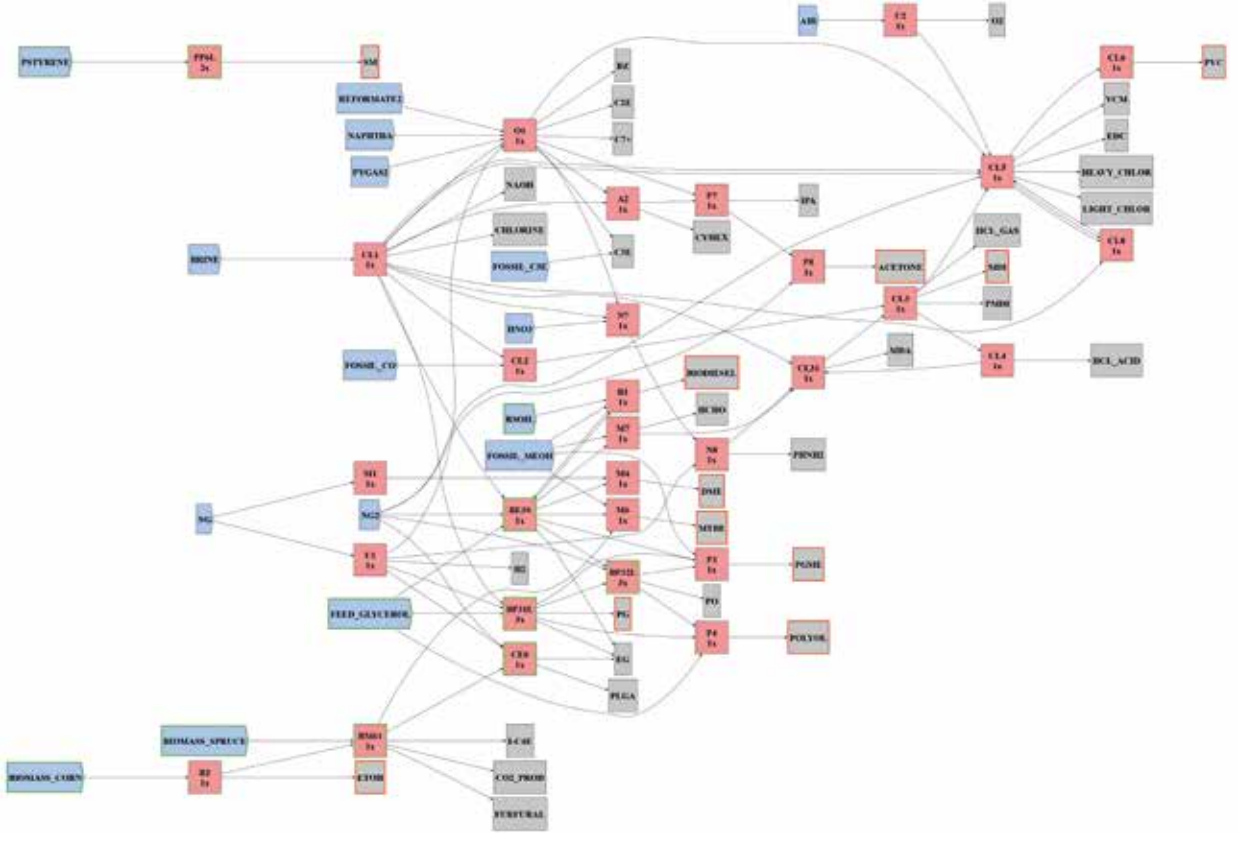

Figure D.8. Solution 5 - Map of connections inside the ACS representative cluster. See the list of processes and the number of plants deployed and removed, also in Table D. 2. and Table D. 2. Changes in the existing structure of the representative cluster. Legend: ☐ Feed; ☐ Process; ☐ Demand (i.e., products and byproducts). (Continued)

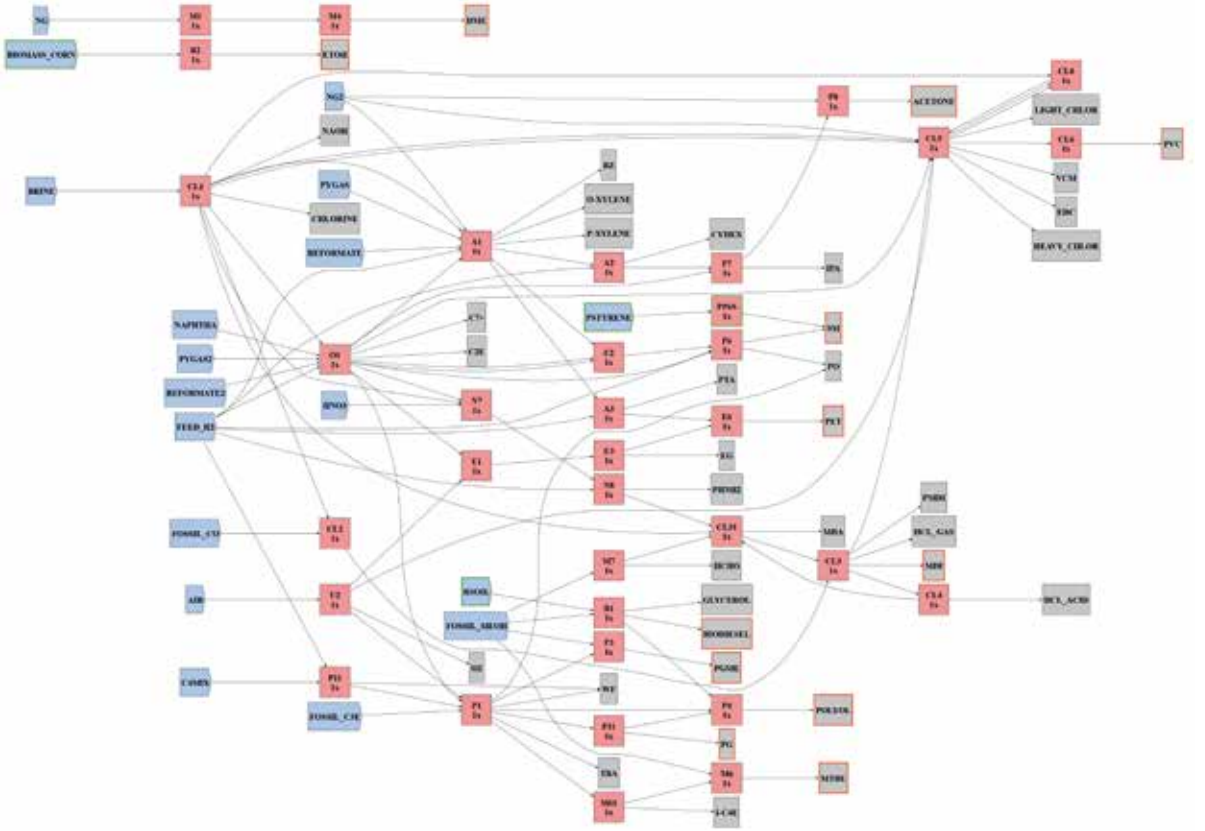

Figure D.9. Solution 7 - Map of connections inside the ACS representative cluster. See the list of processes and the number of plants deployed and removed, also in Table D. 2. and Table D. 2. Changes in the existing structure of the representative cluster. Legend: ☐ Feed; ☐ Process; ☐ Demand (i.e., products and byproducts). (Continued)

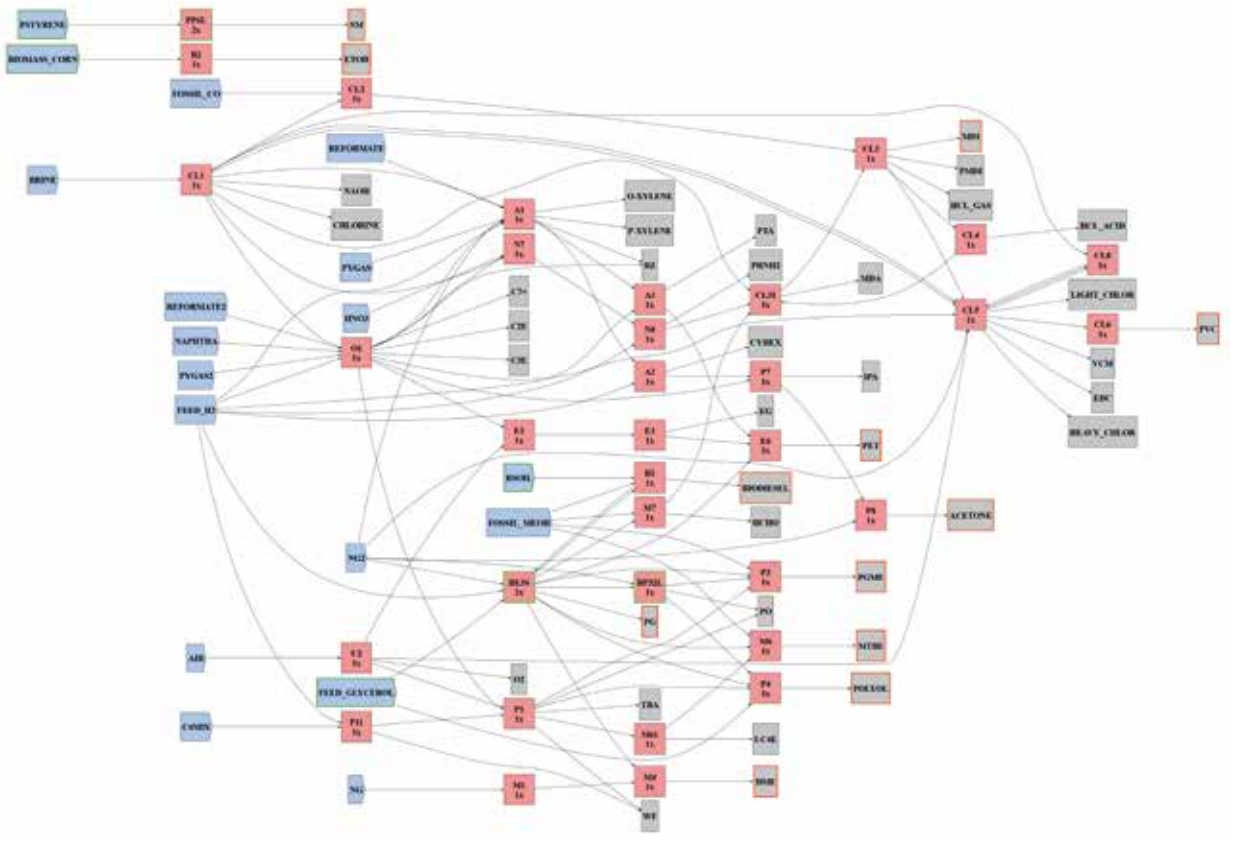

Figure D.10. Solution 8 - Map of connections inside the ACS representative cluster. See the list of processes and the number of plants deployed and removed, also in Table D. 2. and Table D. 2. Changes in the existing structure of the representative cluster. Legend: ☐ Feed; ☐ Process; ☐ Demand (i.e., products and byproducts). (Continued)

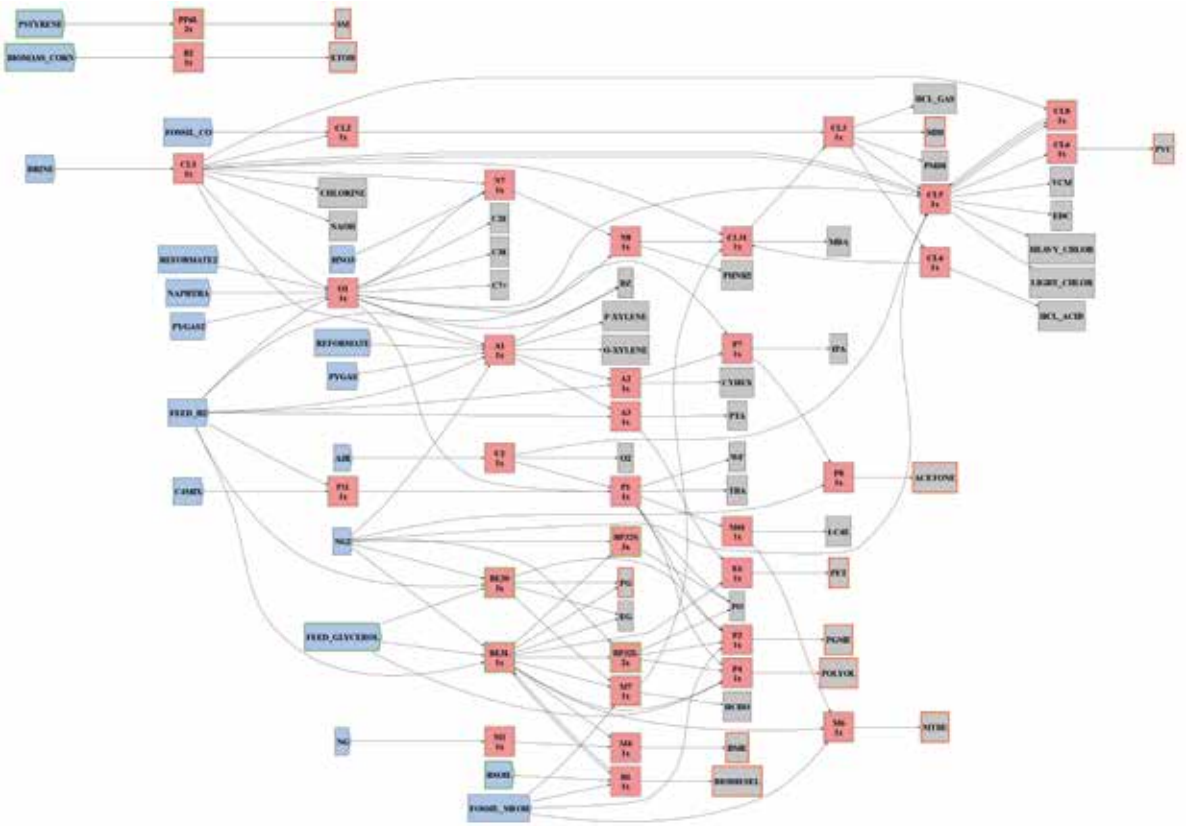

Figure D.11. Solution 9 - Map of connections inside the ACS representative cluster. See the list of processes and the number of plants deployed and removed, also in Table D. 2. and Table D. 2. Changes in the existing structure of the representative cluster. Legend: ☐ Feed; ☐ Process; ☐ Demand (i.e., products and byproducts). (Continued)

OPTIMISATION RESULTS CORRESPONDING O THE INFLEX SCENARIO: CHANGES IN THE CLUSTER PERFORMANCE

Table D.5. Mass flow rates of feedstock streams (carbon-based only) per solution. The table includes only streams that differ from the representative cluster's streams, Solution 6.

Feed stream	Full name	Enters process (es)	Sol 1, kt/y	Sol 2, kt/y	Sol 3, kt/y	Sol 4, kt/y	Sol 5, kt/y	Sol 6, kt/y (Fossil-based cluster)	Sol 7, kt/y	Sol 8, kt/y	Sol 9, kt/y
C4MIX	-	P1.1	574	570	574	0	0	574	570	570	574
FOSSIL_C3E	Propylene	P1	0	0	0	0	0	65	62	0	0
FOSSIL_ MEOH	Methanol	M7, M6, P3, B1	298	276	298	276	276	298	298	263	224
NG	Natural gas	U1, M1	127	126	566	126	565	566	127	126	126
PYGAS	-	A1	0	0	0	0	0	2,198	2,198	2,198	2,198
REFORMATE	-	A1	0	0	0	0	0	1,848	1,848	1,848	1,848
BIOMASS_ CORN	-	B2	1,661	1,661	1,661	1,669	1,669	1661	1,661	1,661	1,677
BIOMASS_ SPRUCE		BM61	0	0	0	4,159	4,159	0	0	0	0
CO_2	Carbon dioxide	CE6	359	359	359	0	0	0	0	0	0
FEED_ GLYCEROL	-	BP31, P4, BE3	0	420	0	420	420	0	0	263	594
PSTYRENE	Polystyrene	PP6	978	978	978	978	978	0	50	978	978
FEED_H_2	Hydrogen	O1, N8, P11, BP31, CE6	34	46	0	46	0	0	46	50	59

Table D.6. Energy requirements of the cluster per solution. LLPS – very low pressure steam; LPS – low pressure steam; MPS – medium pressure steam; HPS – high pressure steam.

Utility type	Sol 1, PJ/y	Sol 2, PJ/y	Sol 3, PJ/y	Sol 4, PJ/y	Sol 5, PJ/y	Sol 6, PJ/y (Fossil-based cluster)	Sol 7, PJ/y	Sol 8, PJ/y	Sol 9, PJ/y
LLPS	11	13	11	10	10	10	14	11	9
LPS	1	0	1	0	0	5	5	5	5
MPS	2	2	2	2	2	10	10	7	7
HPS	3	3	1	3	0	9	11	10	10
Electricity (electrolyser)	4	4	4	4	4	0	0	0	0
Electricity	13	13	14	42	43	15	14	14	14
Cooling water	101	103	102	218	219	147	146	136	133
Natural gas	109	109	109	108	108	113	112	112	113

Table D.7. Mass flow rates of products per solution. The table includes only streams that differ from the streams of the representative cluster, Solution 6.

Product stream	Full name	Exits process (es)	Sol 1, kt/y	Sol 2, kt/y	Sol 3, kt/y	Sol 4, kt/y	Sol 5, kt/y	Sol 6, kt/y (Fossil-based cluster)	Sol 7, kt/y	Sol 8, kt/y	Sol 9, kt/y
BZ	Benzene	A1, O1	178	178	178	178	178	452	457	1,024	1,024
C2E	Ethylene	O1	550	550	550	550	550	78	79	282	550
C3E	Propylene	O1	179	180	179	368	368	0	0	180	179
C7+	Heavy hydrocarbons	O1	276	276	276	276	276	0	0	0	0
CO2_PROD	Carbon dioxide	BM61	0	0	0	237	237	0	0	0	0
EG	Ethylene glycol	E3, CE6, BP31, BE3	45	90	45	90	90	13	13	83	49

Table D.7. Mass flow rates of products per solution. The table includes only streams that differ from the streams of the representative cluster, Solution 6. (continued)

Product stream	Full name	Exits process (es)	Sol 1, kt/y	Sol 2, kt/y	Sol 3, kt/y	Sol 4, kt/y	Sol 5, kt/y	Sol 6, kt/y (Fossil-based cluster)	Sol 7, kt/y	Sol 8, kt/y	Sol 9, kt/y
EO	Ethylene oxide	E2	0	0	0	0	0	197	197	197	0
ETOH	Ethanol	B2	486	486	486	479	479	486	486	486	491
FURFURAL	-	BM61	0	0	0	48	48	0	0	0	0
GLYCEROL	-	B1	40	0	40	0	0	40	40	0	0
H2	Hydrogen	U1	0	0	64	0	53	53	0	0	0
I-C4E	Isobutene	M61, BM61	95	95	95	98	98	95	95	95	95
O2	Oxygen	U2	915	916	915	1179	1,179	609	610	610	915
O-XYLENE	-	A1	0	0	0	0	0	180	180	180	180
PET	Polyethylene terephthalate	E6	0	0	0	0	0	231	231	231	231
PLGA	Poly(lactic-co-glycolic) acid	CE6	232	232	232	232	232	0	0	0	0
PO	Propylene oxide	P1, P6, BP32	39	286	39	42	42	326	322	165	298
PTA	Terephthalic Acid	A3	0	0	0	0	0	145	145	145	145
P-XYLENE	-	A1	0	0	0	0	0	493	493	493	493
TBA	Tert-butyl alcohol	P1	100	96	100	0	0	100	96	96	100

Table D.8. Mass flow rates of waste streams per solution.

Waste	Sol 1, kt/y	Sol 2, kt/y	Sol 3, kt/y	Sol 4, kt/y	Sol 5, kt/y	Sol 6, kt/y (Fossil-based cluster)	Sol 7, kt/y	Sol 8, kt/y	Sol 9, kt/y
Fuel oil	173	206	173	124	124	1,014	1013	945	989
High total dissolved solids (TDS)	20	20	20	1	1	20	20	20	20
Waste water	10,468	10,525	10,683	17,837	18,051	12,642	12,422	11,850	11,846
Fuel gas	79	83	79	83	83	1,180	1,181	1,168	1,171
Flue gas	130,238	129,038	133,693	160,141	16,3597	13,3168	125,891	131663	131,544
Solid waste	9	9	9	29	29	8	8	8	8
Fossil-based chemicals*	927	929	927	1,116	1,116	0	7	957	1,224
Hazardous	374	374	374	458	458	1,187	1,188	1,213	1,216

* Fossil-based chemicals are still produced but not used in the downstream production.

Table D.9. The excess of the energy streams generated by the cluster per solution. LLPS – very low pressure steam; LPS – low pressure steam; MPS – medium pressure steam; HPS – high pressure steam.

Utility type	Sol 1, PJ/y	Sol 2, PJ/y	Sol 3, PJ/y	Sol 4, PJ/y	Sol 5, PJ/y	Sol 6, PJ/y (Fossil-based cluster)	Sol 7, PJ/y	Sol 8, PJ/y	Sol 9, PJ/y
LLPS	2	2	2	11	11	1	1	2	2
LPS	7	8	7	10	11	3	3	5	6
MPS	17	15	18	11	12	6	6	10	7
HPS	12	12	12	12	12	7	7	11	11
Electricity	5	5	5	5	5	5	5	5	5

Table D.10. Import and revenue of the cluster per solution.

	Sol 1, MEUR/y	Sol 2, MEUR/y	Sol 3, MEUR/y	Sol 4, MEUR/y	Sol 5, MEUR/y	Sol 6, MEUR/y (Fossil-based cluster)	Sol 7, MEUR/y	Sol 8, MEUR/y	Sol 9, MEUR/y
Feedstock import costs	4,927	5,301	5,022	5,151	5,226	7,538	7,469	8,040	8,353
Energy import costs	2,513	2,605	2,447	4,140	4,085	3,269	3,479	3,101	3,020
Product revenue	7,345	7,786	7,346	7,304	7,306	9,817	9,867	9,577	9,511
Energy revenue	1,159	1,115	1,171	1,271	1,293	600	600	897	862

The chapter specific supplementary information (SI) are provided in the 4TU Research Data repository: https://doi.org/10.4121/356e7b5f-72e4-4801-98b4-bcb19f9accec. SI includes additionally:

· Input data for TEE assessment.

REFERENCES

(1) Mavrotas, G.; Florios, K. An Improved Version of the Augmented ε-Constraint Method (AUGMECON2) for Finding the Exact Pareto Set in Multi-Objective Integer Programming Problems. *Appl. Math. Comput.* **2013**, *219* (18), 9652–9669. https://doi.org/10.1016/j.amc.2013.03.002.

(2) Hwang, C.-L.; Yoon, K. *Multiple Attribute Decision Making*; Lecture Notes in Economics and Mathematical Systems; Springer Berlin Heidelberg: Berlin, Heidelberg, 1981; Vol. 186. https://doi.org/10.1007/978-3-642-48318-9.

(3) Tan, M.; Nikolic, I.; Ramírez, A. R. Superstructure-Based Optimization Framework to Assess Defossilization Pathways in Petrochemical Clusters. *Chem. Eng. Sci.* **2026**, *321*, 122783. https://doi.org/10.1016/j.ces.2025.122783.

(4) PBL. *MIDDEN: Manufacturing Industry Decarbonisation Data Exchange Network*. https://www.pbl.nl/en/middenweb/project-summary (accessed 2025-06-01).

(5) Bynum, M. L.; Hackebeil, G. A.; Hart, W. E.; Laird, C. D.; Nicholson, B. L.; Siirola, J. D.; Watson, J.-P.; Woodruff, D. L. *Pyomo — Optimization Modeling in Python*; Springer Optimization and Its Applications; Springer International Publishing: Cham, 2021; Vol. 67. https://doi.org/10.1007/978-3-030-68928-5.

(6) Hart, W. E.; Watson, J.-P.; Woodruff, D. L. Pyomo: Modeling and Solving Mathematical Programs in Python. *Math. Program. Comput.* **2011**, *3* (3), 219–260. https://doi.org/10.1007/s12532-011-0026-8.

(7) Gurobi Optimization. Gurobi Optimizer Reference Manual. 2024.

APPENDIX E FOR CHAPTER 5

OPTIMISATION RESULTS: PARETO FRONTS AND ACS TECHNOLOGIES INFLEX AND FLEX SCENARIOS

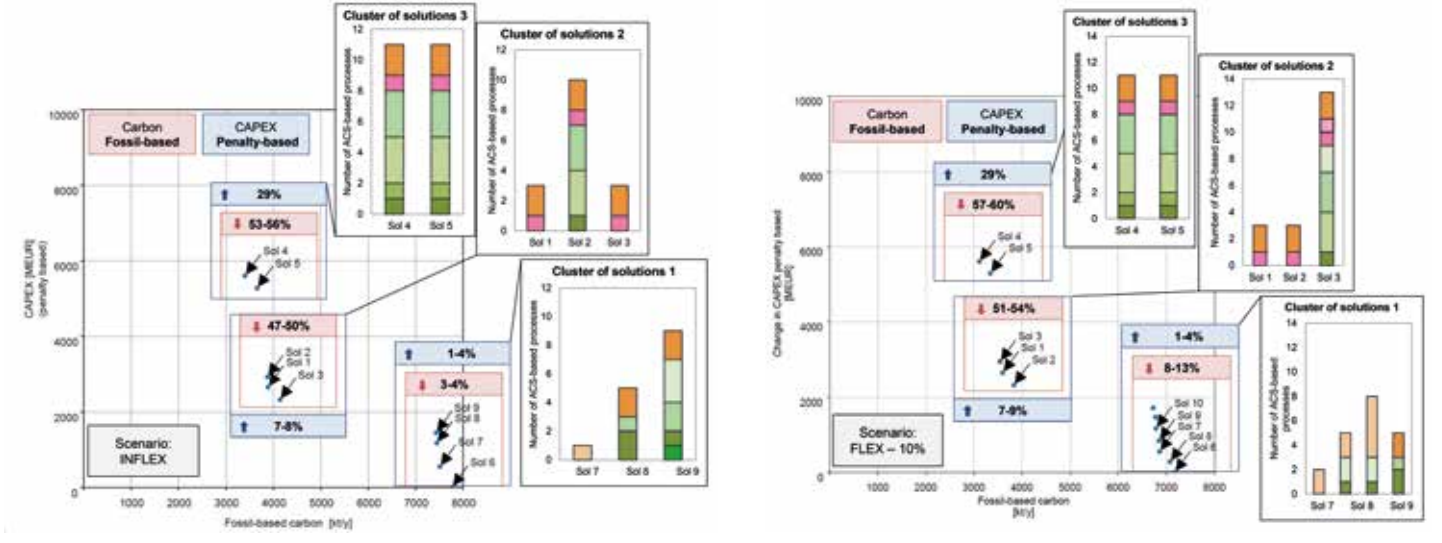

Figure E.1. Pareto fronts of INFLEX and FLEX scenario. The portfolios of the ACS processes are presented in bar charts, for further information, check Tables E.1 -E.3 and Appendix D, Table D.3. The bar charts show the processes that use biomass (in green), CO_2 (in pink), and plastic waste (in orange). For details on the processes, see Appendix A, Tables A.1 and A.2.

Legend: Bio-MEG: -BE3L; -BE3S; Bio-IBN: -BM61; Bio-PG: -BP31L; -BP31S; Bio-PO: -BP32L; -BP32S; PLGA: -CE6; CO_2-based polyol: -CP4L; -CP4S; Plastic-based styrene: -PP6L; -PP6S.

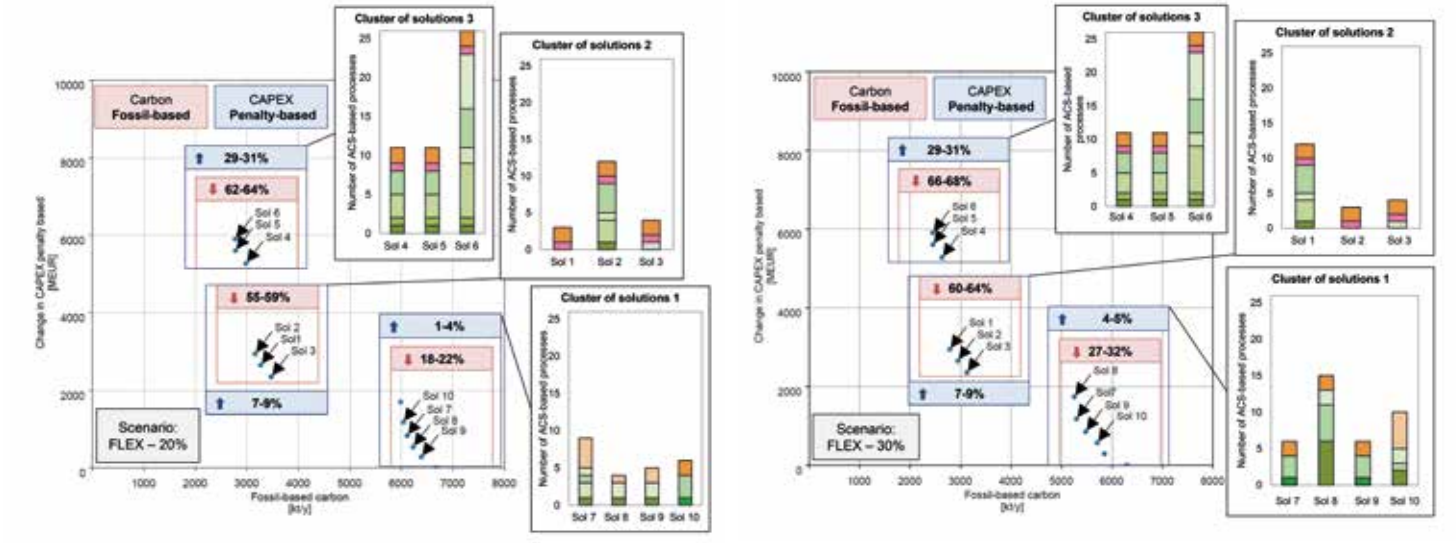

Figure E.1. Pareto fronts of INFLEX and FLEX scenario. The portfolios of the ACS processes are presented in bar charts, for further information, check Tables E.1 -E.3 and Appendix D, Table D.3. The bar charts show the processes that use biomass (in green), CO_2 (in pink), and plastic waste (in orange). For details on the processes, see Appendix A, Tables A.1 and A.2.

Legend: Bio-MEG: -BE3L; -BE3S; Bio-IBN: -BM61; Bio-PG: -BP31L; -BP31S; Bio-PO: -BP32L; -BP32S; PLGA: -CE6; CO_2-based polyol: -CP4L; -CP4S; Plastic-based styrene: -PP6L; -PP6S.

Table E.1. FLEX scenario - 10%: Number of ACS-based technologies per solution. For details on the processes, see Appendix A, Tables A.1 and A.2.

Process ID	Production process	Capacity, kt/y	Land, m^2	Sol 1	Sol 2	Sol 3	Sol 4	Sol 5	Sol 6	Sol 7	Sol 8	Sol 9	Sol 10
BE3L	Biomass - PG (MEG)	113	204	0	0	0	0	0	0	0	0	0	0
BE3S	Biomass - PG (MEG)	35	107	0	0	1	1	1	0	0	1	1	2
BM61	Biomass - IBN	358	4,145	0	0	0	1	1	0	0	0	0	0
BP31L	Biomass - PG	80	81	0	0	3	3	3	0	0	0	0	0
BP31S	Biomass - PG	31	55	0	0	0	0	0	0	0	0	0	0
BP32L	PG - PO	60	52	0	0	3	3	3	0	0	0	0	1
BP32S	PG - PO	23	29	0	0	2	0	0	0	0	2	2	0
CE6	CO_2- PLGA	231	182	1	1	1	1	1	0	0	0	0	0
CP4L	CO_2 (42%) - Polyol	70	16	0	0	1	0	0	0	0	0	0	0
CP4S	CO_2 (23%) - Polyol	70	13	0	0	0	0	1	0	0	0	0	0
PP6L	Waste - Styrene	325	396	2	2	2	2	2	0	0	0	0	2
PP6S	Waste - Styrene	33	77	0	0	0	0	0	0	2	2	5	0

Table E.2. FLEX scenario - 20%: Number of ACS-based technologies per solution.

Process ID	Production process	Capacity, kt/y	Land, m²	Sol 1	Sol 2	Sol 3	Sol 4	Sol 5	Sol 6	Sol 7	Sol 8	Sol 9	Sol 10
BE3L	Biomass - PG (MEG)	113	204	0	0	0	0	0	0	0	0	0	1
BE3S	Biomass - PG (MEG)	35	107	0	1	0	1	1	1	1	1	1	0
BM61	Biomass - IBN	358	4,145	0	0	0	1	1	1	0	0	0	0
BP31L	Biomass - PG	80	81	0	3	0	3	3	7	0	0	0	0
BP31S	Biomass - PG	31	55	0	1	1	0	0	2	2	0	0	0
BP32L	PG - PO	60	52	0	4	0	3	3	5	1	0	0	3
BP32S	PG - PO	23	29	0	0	0	0	0	7	1	2	2	0
CE6	CO_2- PLGA	231	182	1	1	1	1	1	1	0	0	0	0
CP4L	CO_2 (42%) - Polyol	70	16	0	0	0	0	0	0	0	0	0	0
CP4S	CO_2 (23%) - Polyol	70	13	0	0	0	0	0	0	0	0	0	0
PP6L	Waste - Styrene	325	396	2	2	2	2	2	2	0	0	0	2
PP6S	Waste - Styrene	33	77	0	0	0	0	0	0	4	1	2	0

Table E.3. FLEX scenario - 30%: Number of ACS-based technologies per solution.

Process ID	Production process	Capacity, kt/y	Land, m²	Sol 1	Sol 2	Sol 3	Sol 4	Sol 5	Sol 6	Sol 7	Sol 8	Sol 9	Sol 10
BE3L	Biomass - PG (MEG)	113	204	0	0	0	0	0	0	1	0	1	0
BE3S	Biomass - PG (MEG)	35	107	1	0	0	1	1	1	0	6	0	2
BM61	Biomass - IBN	358	4,145	0	0	0	1	1	1	0	0	0	0
BP31L	Biomass - PG	80	81	3	0	0	3	3	7	0	0	0	0
BP31S	Biomass - PG	31	55	1	0	1	0	0	2	0	0	0	0
BP32L	PG - PO	60	52	4	0	0	3	3	5	3	5	3	1
BP32S	PG - PO	23	29	0	0	0	0	0	7	0	2	0	2
CE6	CO_2- PLGA	231	182	1	1	1	1	1	1	0	0	0	0
CP4L	CO_2 (42%) - Polyol	70	16	0	0	0	0	0	0	0	0	0	0
CP4S	CO_2 (23%) - Polyol	70	13	0	0	0	0	0	0	0	0	0	0
PP6L	Waste - Styrene	325	396	2	2	2	2	2	2	2	2	2	0
PP6S	Waste - Styrene	33	77	0	0	0	0	0	0	0	0	0	5

FEED SCENARIO

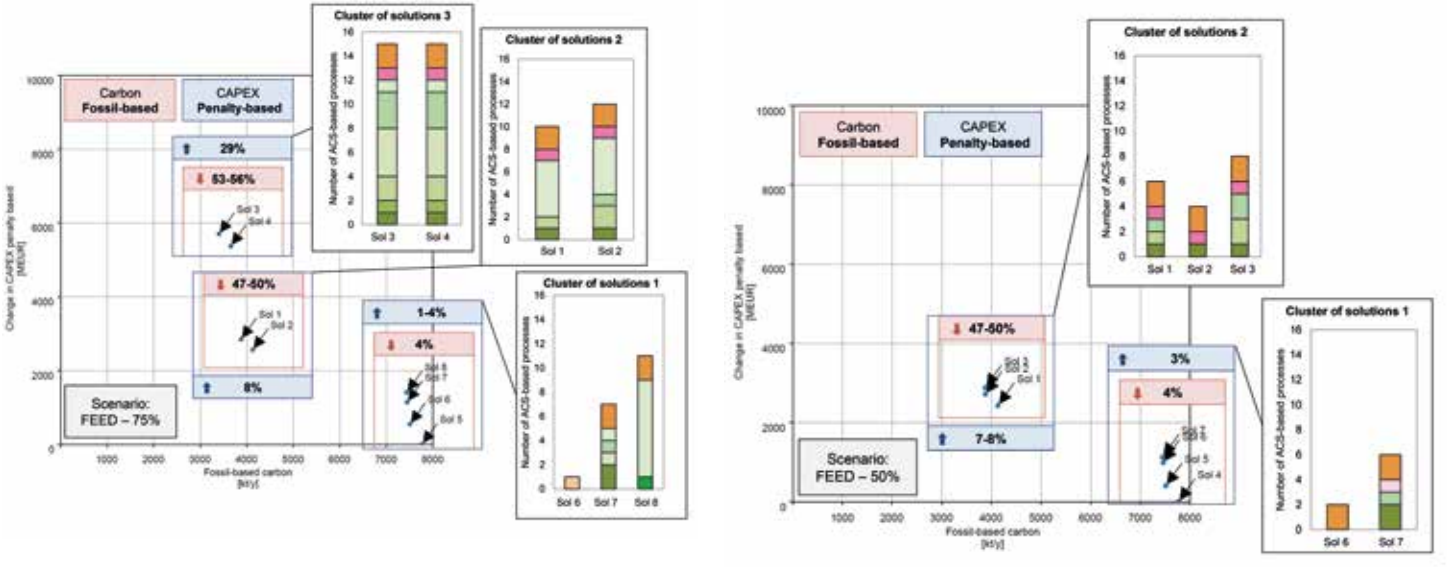

Figure E.2. Pareto fronts in the FEED scenario. The portfolios of the ACS processes are presented in bar charts, for further information, check Tables E.4 -E.6. The bar charts show the number of processes that use biomass (in green), CO_2 (in pink), and plastic waste (in orange) in each solution. For details on the processes, see Appendix A, Tables A.1 and A.2.

Legend: Bio-MEG: -BE3L; -BE3S; Bio-IBN: -BM61; Bio-PG: -BP31L; -BP31S; Bio-PO: -BP32L; -BP32S; PLGA: -CE6; CO_2-based polyol: -CP4L; -CP4S; Plastic-based styrene: -PP6L; -PP6S.

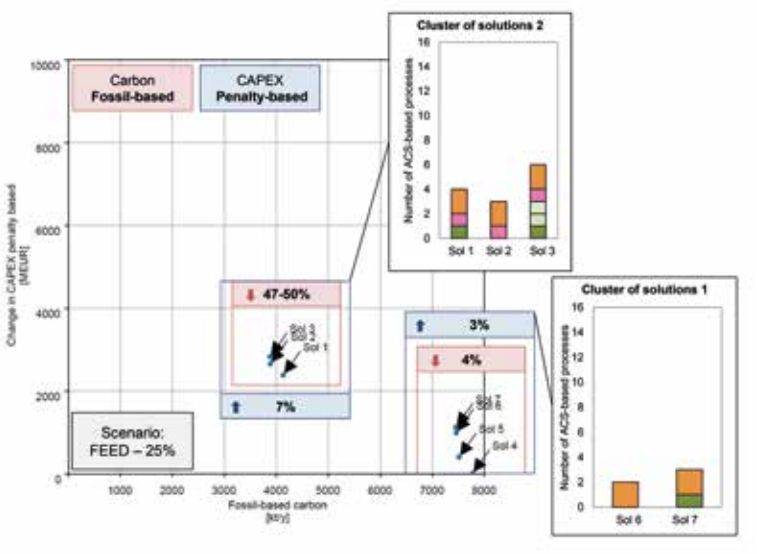

Figure E.2. Pareto fronts in the FEED scenario. The portfolios of the ACS processes are presented in bar charts, for further information, check Tables E.4 -E.6. The bar charts show the number of processes that use biomass (in green), CO_2 (in pink), and plastic waste (in orange) in each solution. For details on the processes, see Appendix A, Tables A.1 and A.2.

Legend: Bio-MEG: -BE3L; -BE3S; Bio-IBN: -BM61; Bio-PG: -BP31L; -BP31S; Bio-PO: -BP32L; -BP32S; PLGA: -CE6; CO_2-based polyol: -CP4L; -CP4S; Plastic-based styrene: -PP6L; -PP6S.

Table E.4. FEED scenario - 75%: Number of ACS-based technologies per solution. For details on the processes, see Appendix A, Tables A.1 and A.2.

Process ID	Production process	Capacity, kt/y	Land, m^2	Sol 1	Sol 2	Sol 3	Sol 4	Sol 5	Sol 6	Sol 7	Sol 8
BE3L	Biomass - PG (MEG)	113	204	0	0	0	0	0	0	0	1
BE3S	Biomass - PG (MEG)	35	107	1	1	1	1	0	0	2	0
BM61	Biomass - IBN	358	4,145	0	0	1	1	0	0	0	0
BP31L	Biomass - PG	80	81	1	2	2	2	0	0	0	0
BP31S	Biomass - PG	31	55	0	0	4	4	0	0	1	0
BP32L	PG - PO	60	52	0	1	3	3	0	0	1	0
BP32S	PG - PO	23	29	5	5	1	1	0	0	1	8
CE6	CO_2- PLGA	231	182	1	1	1	1	0	0	0	0
CP4L	CO_2 (42%) - Polyol	70	16	0	0	0	0	0	0	0	0
CP4S	CO_2 (23%) - Polyol	70	13	0	0	0	0	0	0	0	0
PP6L	Waste - Styrene	325	396	2	2	2	2	0	0	2	2
PP6S	Waste - Styrene	33	77	0	0	0	0	0	0	0	0

Table E.5. FEED scenario - 50%: Number of ACS-based technologies per solution.

Process ID	Production process	Capacity, kt/y	Land, m^2	Sol 1	Sol 2	Sol 3	Sol 4	Sol 5	Sol 6	Sol 7
BE3L	Biomass - PG (MEG)	113	204	0	0	0	0	0	0	0
BE3S	Biomass - PG (MEG)	35	107	1	1	1	0	0	0	2
BM61	Biomass - IBN	358	4,145	0	0	0	0	0	0	0
BP31L	Biomass - PG	80	81	1	0	2	0	0	0	0
BP31S	Biomass - PG	31	55	0	0	0	0	0	0	0
BP32L	PG - PO	60	52	1	0	2	0	0	0	1
BP32S	PG - PO	23	29	0	0	0	0	0	0	0
CE6	CO_2- PLGA	231	182	1	1	1	0	0	0	0
CP4L	CO_2 (42%) - Polyol	70	16	0	0	0	0	0	0	0
CP4S	CO_2 (23%) - Polyol	70	13	0	0	0	0	0	0	1
PP6L	Waste - Styrene	325	396	2	2	2	0	0	2	2
PP6S	Waste - Styrene	33	77	0	0	0	0	0	0	0

Table E.6. FEED scenario - 25%: Number of ACS-based technologies per solution.

Process ID	Production process	Capacity, kt/y	Land, m^2	Sol 1	Sol 2	Sol 3	Sol 4	Sol 5	Sol 6	Sol 7
BE3L	Biomass - PG (MEG)	113	204	0	0	0	0	0	0	0
BE3S	Biomass - PG (MEG)	35	107	1	0	1	0	0	0	1
BM61	Biomass - IBN	358	4,145	0	0	0	0	0	0	0
BP31L	Biomass - PG	80	81	0	0	0	0	0	0	0
BP31S	Biomass - PG	31	55	0	0	1	0	0	0	0
BP32L	PG - PO	60	52	0	0	0	0	0	0	0
BP32S	PG - PO	23	29	0	0	1	0	0	0	0
CE6	CO_2- PLGA	231	182	1	1	1	0	0	0	0
CP4L	CO_2 (42%) - Polyol	70	16	0	0	0	0	0	0	0
CP4S	CO_2 (23%) - Polyol	70	13	0	0	0	0	0	0	0
PP6L	Waste - Styrene	325	396	2	2	2	0	0	2	2
PP6S	Waste - Styrene	33	77	0	0	0	0	0	0	0

LAND SCENARIO

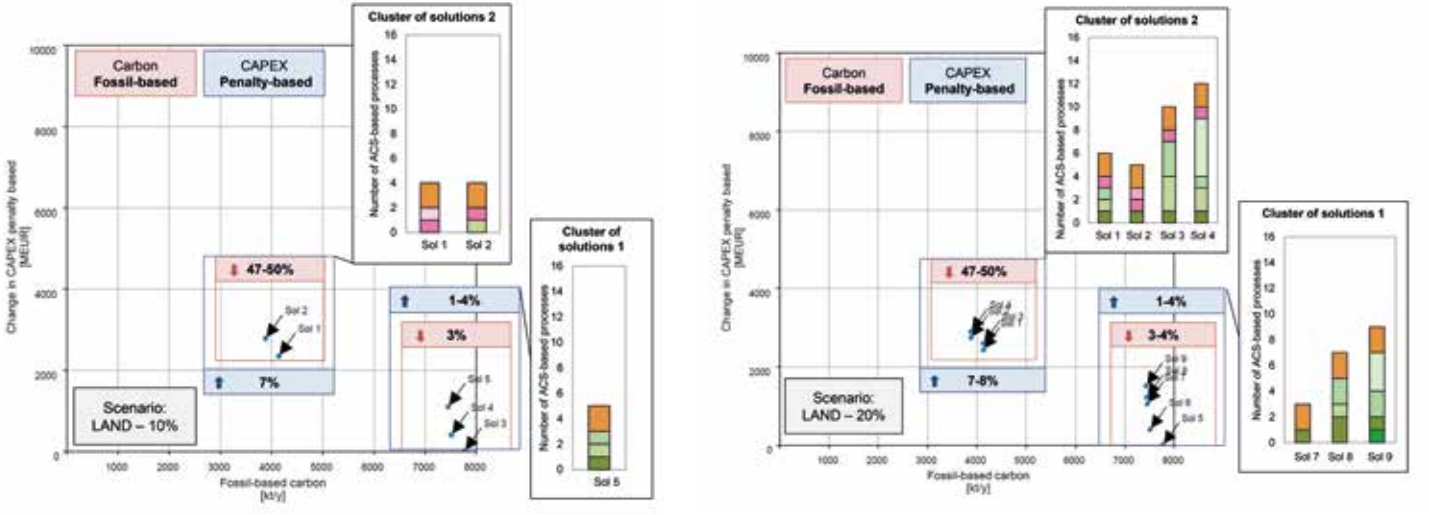

Figure E.3. Pareto fronts from LAND scenario. The portfolios of the ACS processes are presented in bar charts, for further information, check Tables E.7 – E.9. The bar charts show the number of processes that use biomass (in green), CO_2 (in pink), and plastic waste (in orange) in each solution. For details on the processes, see Appendix A, Tables A.1 and A.2.

Legend: Bio-MEG: -BE3L; -BE3S; Bio-IBN: -BM61; Bio-PG: -BP31L; -BP31S; Bio-PO: -BP32L; -BP32S; PLGA: -CE6; CO_2-based polyol: -CP4L; -CP4S; Plastic-based styrene: -PP6L; -PP6S.

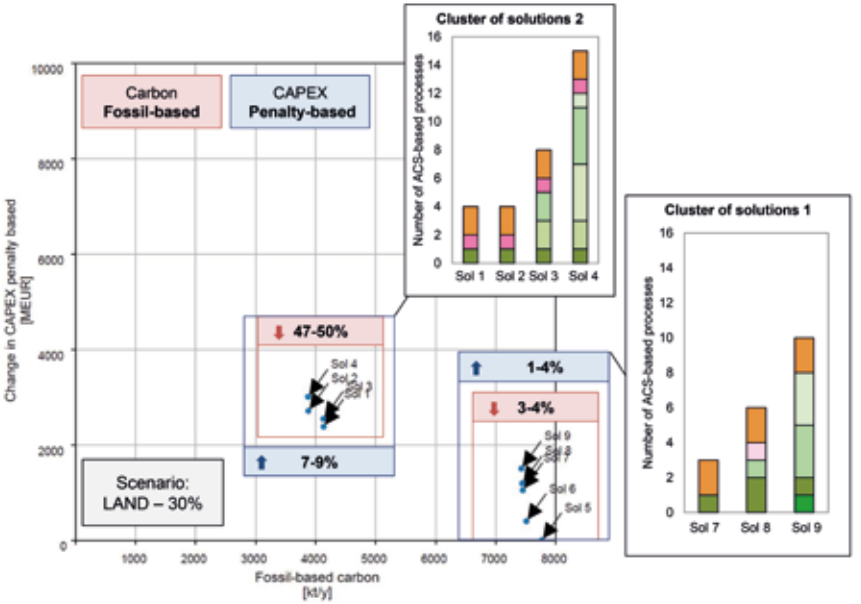

Figure E.3. Pareto fronts from LAND scenario. The portfolios of the ACS processes are presented in bar charts, for further information, check Tables E.7 – E.9. The bar charts show the number of processes that use biomass (in green), CO_2 (in pink), and plastic waste (in orange) in each solution. For details on the processes, see Appendix A, Tables A.1 and A.2.

Legend: Bio-MEG: -BE3L; -BE3S; Bio-IBN: -BM61; Bio-PG: -BP31L; -BP31S; Bio-PO: -BP32L; -BP32S; PLGA: -CE6; CO_2-based polyol: -CP4L; -CP4S; Plastic-based styrene: -PP6L; -PP6S.

Table E.7. LAND scenario - 10%: Number of ACS-based technologies per solution. For details on the processes, see Appendix A, Tables A.1 and A.2.

Process ID	Production process	Capacity, kt/y	Land, m^2	Sol 1	Sol 2	Sol 3	Sol 4	Sol 5
BE3L	Biomass - PG (MEG)	113	204	0	0	0	0	0
BE3S	Biomass - PG (MEG)	35	107	0	0	0	0	1
BM61	Biomass - IBN	358	4,145	0	0	0	0	0
BP31L	Biomass - PG	80	81	0	1	0	0	1
BP31S	Biomass - PG	31	55	0	0	0	0	0
BP32L	PG - PO	60	52	0	0	0	0	1
BP32S	PG - PO	23	29	0	0	0	0	0
CE6	CO_2 - PLGA	231	182	1	1	0	0	0
CP4L	CO_2 (42%) - Polyol	70	16	0	0	0	0	0
CP4S	CO_2 (23%) - Polyol	70	13	1	0	0	0	0
PP6L	Waste - Styrene	325	396	2	2	0	0	2
PP6S	Waste - Styrene	33	77	0	0	0	0	0

Table E.8. LAND scenario - 20%: Number of ACS-based technologies per solution.

Process ID	Production process	Capacity, kt/y	Land, m^2	Sol 1	Sol 2	Sol 3	Sol 4	Sol 5	Sol 6	Sol 7	Sol 8	Sol 9
BE3L	Biomass - PG (MEG)	113	204	0	0	0	0	0	0	0	0	1
BE3S	Biomass - PG (MEG)	35	107	1	1	1	1	0	0	1	2	1
BM61	Biomass - IBN	358	4,145	0	0	0	0	0	0	0	0	0
BP31L	Biomass - PG	80	81	1	0	3	2	0	0	0	1	0
BP31S	Biomass - PG	31	55	0	0	0	0	0	0	0	0	0
BP32L	PG - PO	60	52	1	0	3	1	0	0	0	2	2
BP32S	PG - PO	23	29	0	0	0	5	0	0	0	0	3
CE6	CO_2- PLGA	231	182	1	1	1	1	0	0	0	0	0
CP4L	CO_2 (42%) - Polyol	70	16	0	1	0	0	0	0	0	0	0
CP4S	CO_2 (23%) - Polyol	70	13	0	0	0	0	0	0	0	0	0
PP6L	Waste - Styrene	325	396	2	2	2	2	0	0	2	2	2
PP6S	Waste - Styrene	33	77	0	0	0	0	0	0	0	0	0

Table E.9. LAND scenario - 30%: Number of ACS-based technologies per solution.

Process ID	Production process	Capacity, kt/y	Land, m^2	Sol 1	Sol 2	Sol 3	Sol 4	Sol 5	Sol 6	Sol 7	Sol 8	Sol 9
BE3L	Biomass - PG (MEG)	113	204	0	0	0	0	0	0	0	0	1
BE3S	Biomass - PG (MEG)	35	107	1	1	1	1	0	0	1	2	1
BM61	Biomass - IBN	358	4,145	0	0	0	0	0	0	0	0	0
BP31L	Biomass - PG	80	81	0	0	2	2	0	0	0	0	0
BP31S	Biomass - PG	31	55	0	0	0	4	0	0	0	0	0
BP32L	PG - PO	60	52	0	0	2	4	0	0	0	1	3
BP32S	PG - PO	23	29	0	0	0	1	0	0	0	0	3
CE6	CO_2- PLGA	231	182	1	1	1	1	0	0	0	0	0
CP4L	CO_2 (42%) - Polyol	70	16	0	0	0	0	0	0	0	0	0
CP4S	CO_2 (23%) - Polyol	70	13	0	0	0	0	0	0	0	1	0
PP6L	Waste - Styrene	325	396	2	2	2	2	0	0	2	2	2
PP6S	Waste - Styrene	33	77	0	0	0	0	0	0	0	0	0

OPTIMISATION RESULTS: STRUCTURAL CHANGES WITHIN REPRESENTATIVE CLUSTER INFLEX AND FLEX SCENARIOS

Table E.10. FLEX scenario - 10%: Changes in the existing structure of the base case (fossil petrochemical cluster). The table shows processes removed (0), and remain in the cluster (1). Reduced output (RO) from the processes is presented in %. For details on the processes, see Appendix A, Tables A.1 and A.2. For details on the INFLEX scenario, please refer to Appendix D, Table D.2.

Process ID	Sol 1		Sol 2		Sol 3		Sol 4		Sol 5		Sol 6		Sol 7		Sol 8		Sol 9		Sol 10	
		RO		RO		RO		RO		RO		RO		RO		RO		RO		RO
A1	0	100%	0	100%	0	100%	0	100%	0	100%	1	10%	1	10%	1	10%	1	10%	1	10%
A2	1	5%	1	6%	1	7%	1	6%	1	10%	1	6%	1	6%	1	6%	1	6%	1	6%
A3	0	100%	0	100%	0	100%	0	100%	0	100%	1	6%	1	6%	1	6%	1	6%	1	6%
B1	1	0%	1	0%	1	0%	1	0%	1	0%	1	0%	1	0%	1	0%	1	0%	1	0%
B2	1	4%	1	4%	1	4%	1	1%	1	2%	1	0%	1	4%	1	0%	1	4%	1	4%
CL1	1	5%	1	5%	1	1%	1	5%	1	10%	1	5%	1	5%	1	5%	1	5%	1	5%
CL2	1	0%	1	0%	1	0%	1	0%	1	0%	1	0%	1	0%	1	0%	1	0%	1	0%
CL3	1	0%	1	0%	1	0%	1	0%	1	0%	1	0%	1	0%	1	0%	1	0%	1	0%
CL3.1	1	0%	1	0%	1	0%	1	0%	1	0%	1	0%	1	0%	1	0%	1	0%	1	0%
CL4	1	5%	1	5%	1	5%	1	5%	1	10%	1	5%	1	5%	1	5%	1	5%	1	5%
CL5	1	0%	1	0%	1	0%	1	0%	1	0%	1	0%	1	0%	1	0%	1	0%	1	0%
CL6	1	0%	1	0%	1	0%	1	0%	1	0%	1	0%	1	0%	1	0%	1	0%	1	0%
CL8	1	0%	1	0%	1	0%	1	0%	1	0%	1	0%	1	0%	1	0%	1	0%	1	0%
E1	0	100%	0	100%	0	100%	0	100%	0	100%	1	6%	1	5%	1	5%	1	5%	1	6%
E2	0	100%	0	100%	0	100%	0	100%	0	100%	1	0%	1	10%	1	10%	1	10%	0	100%
E3	0	100%	0	100%	0	100%	0	100%	0	100%	1	6%	1	5%	1	5%	1	5%	1	6%
E6	0	100%	0	100%	0	100%	0	100%	0	100%	1	0%	1	0%	1	0%	1	0%	1	0%
M1	1	0%	1	0%	1	10%	1	10%	1	10%	1	0%	1	0%	1	10%	1	10%	1	10%
M4	1	0%	1	0%	1	0%	1	0%	1	0%	1	0%	1	0%	1	0%	1	0%	1	0%
M6.1	1	5%	1	5%	1	6%	0	100%	0	100%	1	5%	1	6%	1	6%	1	6%	1	6%
M6	1	0%	1	0%	1	0%	1	0%	1	0%	1	0%	1	0%	1	0%	1	0%	1	0%

Table E.10. FLEX scenario - 10%: Changes in the existing structure of the base case (fossil petrochemical cluster). The table shows processes removed (0), and remain in the cluster (1). Reduced output (RO) from the processes is presented in %. For details on the processes, see Appendix A, Tables A.1 and A.2. For details on the INFLEX scenario, please refer to Appendix D, Table D.2. (Continued)

Process ID	Sol 1		Sol 2		Sol 3		Sol 4		Sol 5		Sol 6		Sol 7		Sol 8		Sol 9		Sol 10	
		RO		RO		RO		RO		RO		RO		RO		RO		RO		RO
M7	1	10%	1	10%	1	10%	1	10%	1	10%	1	10%	1	10%	1	10%	1	10%	1	10%
N7	1	5%	1	6%	1	7%	1	5%	1	10%	1	6%	1	5%	1	6%	1	5%	1	5%
N8	1	5%	1	6%	1	7%	1	5%	1	10%	1	6%	1	5%	1	6%	1	5%	1	5%
O1	1	10%	1	10%	1	10%	1	10%	1	10%	1	10%	1	10%	1	10%	1	10%	1	10%
P1.1	1	0%	1	0%	1	10%	0	100%	0	100%	1	0%	1	10%	1	10%	1	10%	1	10%
P1	1	0%	1	0%	1	10%	0	100%	0	100%	1	0%	1	10%	1	10%	1	10%	1	10%
P3	1	0%	1	0%	1	0%	1	0%	1	0%	1	0%	1	0%	1	0%	1	0%	1	0%
P3.1	1	0%	1	0%	1	7%	0	100%	0	100%	1	0%	1	0%	1	6%	1	6%	0	100%
P4	1	0%	1	0%	0	100%	1	0%	0	100%	1	0%	1	0%	1	0%	1	0%	1	0%
P6	0	100%	0	100%	0	100%	0	100%	0	100%	1	0%	1	10%	1	10%	1	10%	0	100%
P7	1	0%	1	0%	1	0%	1	0%	1	0%	1	0%	1	0%	1	0%	1	0%	1	0%
P8	1	0%	1	0%	1	0%	1	0%	1	0%	1	0%	1	0%	1	0%	1	0%	1	0%
U1	0	100%	1	10%	0	100%	0	100%	1	10%	1	10%	0	100%	1	10%	0	100%	0	100%
U2	1	5%	1	5%	1	6%	1	5%	1	10%	1	5%	1	6%	1	6%	1	6%	1	6%
U6 - 1	1	0%	1	0%	0	100%	0	100%	0	100%	1	0%	1	0%	1	0%	0	100%	0	100%
U6 - 2	1	0%	1	0%	1	0%	0	100%	0	100%	1	0%	0	100%	0	100%	1	0%	1	0%

Table E.11. FLEX scenario - 20%: Changes in the existing structure of the base case cluster. The table shows processes removed (0), and remain in the cluster (1). Reduced output (RO) from the processes is presented in %. For details on the processes, see Appendix A, Tables A.1 and A.2.

Process ID	Sol 1		Sol 2		Sol 3		Sol 4		Sol 5		Sol 6		Sol 7		Sol 8		Sol 9		Sol 10	
		RO		RO		RO		RO		RO		RO		RO		RO		RO		RO
A1	0	100%	0	100%	0	100%	0	100%	0	100%	0	100%	1	20%	1	20%	1	20%	1	20%
A2	1	11%	1	11%	1	12%	1	12%	1	12%	1	12%	1	12%	1	12%	1	12%	1	12%
A3	0	100%	0	100%	0	100%	0	100%	0	100%	0	100%	1	6%	1	6%	1	17%	1	6%
B1	1	0%	1	0%	1	0%	1	0%	1	0%	1	0%	1	0%	1	0%	1	0%	1	0%
B2	1	4%	1	4%	1	4%	1	1%	1	1%	1	1%	1	0%	1	0%	1	0%	1	0%
CL1	1	11%	1	12%	1	8%	1	10%	1	11%	1	11%	1	11%	1	11%	1	10%	1	11%
CL2	1	0%	1	0%	1	0%	1	0%	1	0%	1	0%	1	0%	1	0%	1	0%	1	0%
CL3	1	0%	1	0%	1	0%	1	0%	1	0%	1	0%	1	0%	1	0%	1	0%	1	0%
CL3.1	1	0%	1	0%	1	0%	1	0%	1	0%	1	0%	1	0%	1	0%	1	0%	1	0%
CL4	1	10%	1	10%	1	10%	1	10%	1	10%	1	10%	1	10%	1	10%	1	10%	1	10%
CL5	1	0%	1	0%	1	0%	1	0%	1	0%	1	0%	1	0%	1	0%	1	0%	1	0%
CL6	1	0%	1	0%	1	0%	1	0%	1	0%	1	0%	1	0%	1	0%	1	0%	1	0%
CL8	1	0%	1	0%	1	0%	1	0%	1	0%	1	0%	1	0%	1	0%	1	0%	1	0%
E1	0	100%	0	100%	0	100%	0	100%	0	100%	0	100%	1	19%	1	20%	1	20%	1	15%
E2	0	100%	0	100%	0	100%	0	100%	0	100%	0	100%	1	20%	1	5%	1	10%	0	100%
E3	0	100%	0	100%	0	100%	0	100%	0	100%	0	100%	1	19%	1	20%	1	20%	1	15%
E6	0	100%	0	100%	0	100%	0	100%	0	100%	0	100%	1	0%	1	0%	1	0%	1	0%
M1	1	0%	1	20%	1	1%	1	20%	1	20%	1	20%	1	20%	1	20%	1	20%	1	20%
M4	1	0%	1	0%	1	0%	1	0%	1	0%	1	0%	1	0%	1	0%	1	0%	1	0%
M6.1	1	10%	1	12%	1	10%	0	100%	0	100%	0	100%	1	12%	1	12%	1	12%	1	12%
M6	1	0%	1	0%	1	0%	1	0%	1	0%	1	0%	1	0%	1	0%	1	0%	1	0%
M7	1	20%	1	20%	1	20%	1	20%	1	20%	1	20%	1	20%	1	20%	1	20%	1	20%
N7	1	5%	1	6%	1	6%	1	6%	1	6%	1	6%	1	5%	1	5%	1	6%	1	6%
N8	1	5%	1	6%	1	6%	1	6%	1	6%	1	6%	1	5%	1	5%	1	6%	1	6%

Table E.11. FLEX scenario - 20%: Changes in the existing structure of the base case cluster. The table shows processes removed (0), and remain in the cluster (1). Reduced output (RO) from the processes is presented in %. For details on the processes, see Appendix A, Tables A.1 and A.2. (Continued)

Process ID	Sol 1		Sol 2		Sol 3		Sol 4		Sol 5		Sol 6		Sol 7		Sol 8		Sol 9		Sol 10	
		RO		RO		RO		RO		RO		RO		RO		RO		RO		RO
O1	1	20%	1	20%	1	20%	1	20%	1	20%	1	20%	1	20%	1	17%	1	18%	1	20%
P1.1	1	0%	1	20%	1	0%	0	100%	0	100%	0	100%	1	20%	1	20%	1	20%	1	20%
P1	1	0%	1	20%	1	0%	0	100%	0	100%	0	100%	1	20%	1	20%	1	20%	1	20%
P3	1	0%	1	0%	1	0%	1	0%	1	0%	1	0%	1	0%	1	0%	1	0%	1	0%
P3.1	1	0%	1	20%	1	19%	0	100%	0	100%	0	100%	1	20%	1	12%	1	13%	1	13%
P4	1	0%	1	0%	1	0%	1	0%	1	0%	1	0%	1	0%	1	0%	1	0%	1	0%
P6	0	100%	0	100%	0	100%	0	100%	0	100%	0	100%	1	20%	1	5%	1	10%	0	100%
P7	1	0%	1	0%	1	0%	1	0%	1	0%	1	0%	1	0%	1	0%	1	0%	1	0%
P8	1	0%	1	0%	1	0%	1	0%	1	0%	1	0%	1	0%	1	0%	1	0%	1	0%
U1	0	100%	0	100%	1	20%	1	20%	0	100%	0	100%	0	100%	0	100%	1	20%	0	100%
U2	1	5%	1	17%	1	5%	1	5%	1	5%	1	5%	1	17%	1	17%	1	17%	1	17%
U6 - 1	1	0%	0	100%	1	0%	0	100%	0	100%	0	100%	1	0%	1	0%	1	0%	1	0%
U6 - 2	1	0%	1	0%	1	0%	0	100%	0	100%	0	100%	0	100%	0	100%	0	100%	0	100%

Table E.12. FLEX scenario - 30%: Changes in the existing structure of the base case cluster. The table shows processes removed (0), and remain in the cluster (1). Reduced output (RO) from the processes is presented in %. For details on the processes, see Appendix A, Tables A.1 and A.2.

Process ID	Sol 1		Sol 2		Sol 3		Sol 4		Sol 5		Sol 6		Sol 7		Sol 8		Sol 9		Sol 10	
		RO		RO		RO		RO		RO		RO		RO		RO		RO		RO
A1	0	100%	0	100%	0	100%	0	100%	0	100%	0	100%	1	30%	1	30%	1	30%	1	30%
A2	1	18%	1	16%	1	19%	1	19%	1	18%	1	18%	1	18%	1	17%	1	19%	1	18%
A3	0	100%	0	100%	0	100%	0	100%	0	100%	0	100%	1	29%	1	29%	1	29%	1	29%
B1	1	0%	1	0%	1	0%	1	0%	1	0%	1	0%	1	0%	1	0%	1	0%	1	0%
B2	1	4%	1	4%	1	4%	1	1%	1	1%	1	1%	1	0%	1	4%	1	0%	1	0%
CL1	1	18%	1	28%	1	9%	1	15%	1	18%	1	18%	1	18%	1	18%	1	16%	1	16%
CL2	1	0%	1	0%	1	0%	1	0%	1	0%	1	0%	1	0%	1	0%	1	0%	1	0%
CL3	1	0%	1	0%	1	0%	1	0%	1	0%	1	0%	1	0%	1	0%	1	0%	1	0%
CL3.1	1	0%	1	0%	1	0%	1	0%	1	0%	1	0%	1	0%	1	0%	1	0%	1	0%
CL4	1	16%	1	16%	1	16%	1	16%	1	16%	1	16%	1	16%	1	16%	1	16%	1	16%
CL5	1	0%	1	0%	1	0%	1	0%	1	0%	1	0%	1	0%	1	0%	1	0%	1	0%
CL6	1	0%	1	0%	1	0%	1	0%	1	0%	1	0%	1	0%	1	0%	1	0%	1	0%
CL8	1	0%	1	0%	1	0%	1	0%	1	0%	1	0%	1	0%	1	0%	1	0%	1	0%
E1	0	100%	0	100%	0	100%	0	100%	0	100%	0	100%	1	19%	0	100%	1	19%	1	30%
E2	0	100%	0	100%	0	100%	0	100%	0	100%	0	100%	0	100%	0	100%	0	100%	1	26%
E3	0	100%	0	100%	0	100%	0	100%	0	100%	0	100%	1	19%	0	100%	1	19%	1	30%
E6	0	100%	0	100%	0	100%	0	100%	0	100%	0	100%	1	0%	1	0%	1	0%	1	0%
M1	1	26%	1	0%	1	1%	1	26%	1	26%	1	30%	1	30%	0	100%	1	30%	1	30%
M4	1	0%	1	0%	1	0%	1	0%	1	0%	1	0%	1	0%	1	0%	1	0%	1	0%
M6.1	1	21%	1	14%	1	14%	0	100%	0	100%	0	100%	1	20%	1	20%	1	20%	1	21%
M6	1	0%	1	0%	1	0%	1	0%	1	0%	1	0%	1	0%	1	0%	1	0%	1	0%
M7	1	23%	1	23%	1	23%	1	23%	1	23%	1	23%	1	23%	1	23%	1	23%	1	23%
N7	1	6%	1	5%	1	6%	1	6%	1	6%	1	6%	1	6%	1	6%	1	6%	1	5%
N8	1	6%	1	5%	1	6%	1	6%	1	6%	1	6%	1	6%	1	6%	1	6%	1	5%

Table E.12. FLEX scenario - 30%: Changes in the existing structure of the base case cluster. The table shows processes removed (0), and remain in the cluster (1). Reduced output (RO) from the processes is presented in %. For details on the processes, see Appendix A, Tables A.1 and A.2. (Continued)

Process ID	Sol 1		Sol 2		Sol 3		Sol 4		Sol 5		Sol 6		Sol 7		Sol 8		Sol 9		Sol 10	
		RO		RO		RO		RO		RO		RO		RO		RO		RO		RO
O1	1	30%	1	30%	1	30%	1	30%	1	30%	1	30%	1	30%	1	30%	1	30%	1	25%
P1.1	1	30%	1	0%	1	0%	0	100%	0	100%	0	100%	1	30%	1	30%	1	30%	1	30%
P1	1	30%	1	0%	1	0%	0	100%	0	100%	0	100%	1	30%	1	30%	1	30%	1	30%
P3	1	0%	1	0%	1	0%	1	0%	1	0%	1	0%	1	0%	1	0%	1	0%	1	0%
P3.1	1	25%	1	0%	1	25%	0	100%	0	100%	0	100%	1	13%	1	11%	1	13%	1	13%
P4	1	0%	1	0%	1	0%	1	0%	1	0%	1	0%	1	0%	1	0%	1	0%	1	0%
P6	0	100%	0	100%	0	100%	0	100%	0	100%	0	100%	0	100%	0	100%	0	100%	1	25%
P7	1	0%	1	0%	1	0%	1	0%	1	0%	1	0%	1	0%	1	0%	1	0%	1	0%
P8	1	0%	1	0%	1	0%	1	0%	1	0%	1	0%	1	0%	1	0%	1	0%	1	0%
U1	0	100%	0	100%	1	30%	1	30%	0	100%	0	100%	0	100%	0	100%	1	30%	1	30%
U2	1	23%	1	22%	1	5%	1	5%	1	5%	1	5%	1	24%	1	24%	1	24%	1	24%
U6 - 1	0	100%	1	0%	1	0%	0	100%	0	100%	0	100%	0	100%	1	0%	1	0%	0	100%
U6 - 2	1	0%	1	0%	1	0%	0	100%	0	100%	0	100%	1	0%	0	100%	0	100%	1	0%

FEED SCENARIO

Table E.13. FEED scenario - 75%: Changes in the existing structure of the base case cluster. The table shows processes removed (in red), and remain in the cluster (in green). For details on the processes, see Appendix A, Tables A.1 and A.2.

Process ID	Sol 1	Sol 2	Sol 3	Sol 4	Sol 5	Sol 6	Sol 7	Sol 8
A1								
A2								
A3								
B1								
B2								
CL1								
CL2								
CL3								
CL3.1								
CL4								
CL5								
CL6								
CL8								
E1								
E2								
E3								
E6								
M1								
M4								
M6.1								
M6								
M7								
N7								
N8								
O1								
P1.1								
P1								
P3								
P3.1								
P4								
P6								
P7								
P8								
U1								
U2								
U6 - 1								
U6 - 2								

Table E.14. FEED scenario - 50%: Changes in the existing structure of the base case cluster. The table shows processes removed (in red), and remain in the cluster (in green). For details on the processes, see Appendix A, Tables A.1 and A.2.

Process ID	Sol 1	Sol 2	Sol 3	Sol 4	Sol 5	Sol 6	Sol 7
A1							
A2							
A3							
B1							
B2							
CL1							
CL2							
CL3							
CL3.1							
CL4							
CL5							
CL6							
CL8							
E1							
E2							
E3							
E6							
M1							
M4							
M6.1							
M6							
M7							
N7							
N8							
O1							
P1.1							
P1							
P3							
P3.1							
P4							
P6							
P7							
P8							
U1							
U2							
U6 - 1							
U6 - 2							

Table E.15. FEED scenario - 25%: Changes in the existing structure of the base case cluster. The table shows processes removed (in red), and remain in the cluster (in green). For details on the processes, see Appendix A, Tables A.1 and A.2.

Process ID	Sol 1	Sol 2	Sol 3	Sol 4	Sol 5	Sol 6	Sol 7
A1							
A2							
A3							
B1							
B2							
CL1							
CL2							
CL3							
CL3.1							
CL4							
CL5							
CL6							
CL8							
E1							
E2							
E3							
E6							
M1							
M4							
M6.1							
M6							
M7							
N7							
N8							
O1							
P1.1							
P1							
P3							
P3.1							
P4							
P6							
P7							
P8							
U1							
U2							
U6 - 1							
U6 - 2							

LAND SCENARIO

Table E.16. LAND scenario - 10%: Changes in the existing structure of the base case cluster. The table shows processes removed (in red), and remain in the cluster (in green). For details on the processes, see Appendix A, Tables A.1 and A.2.

Process ID	Sol 1	Sol 2	Sol 3	Sol 4	Sol 5
A1					
A2					
A3					
B1					
B2					
CL1					
CL2					
CL3					
CL3.1					
CL4					
CL5					
CL6					
CL8					
E1					
E2					
E3					
E6					
M1					
M4					
M6.1					
M6					
M7					
N7					
N8					
O1					
P1.1					
P1					
P3					
P3.1					
P4					
P6					
P7					
P8					
U1					
U2					
U6 - 1					
U6 - 2					

Table E.17. LAND scenario - 20%: Changes in the existing structure of the base case cluster. The table shows processes removed (in red), and remain in the cluster (in green). For details on the processes, see Appendix A, Tables A.1 and A.2.

Process ID	Sol 1	Sol 2	Sol 3	Sol 4	Sol 5	Sol 6	Sol 7	Sol 8	Sol 9
A1									
A2									
A3									
B1									
B2									
CL1									
CL2									
CL3									
CL3.1									
CL4									
CL5									
CL6									
CL8									
E1									
E2									
E3									
E6									
M1									
M4									
M6.1									
M6									
M7									
N7									
N8									
O1									
P1.1									
P1									
P3									
P3.1									
P4									
P6									
P7									
P8									
U1									
U2									
U6 - 1									
U6 - 2									

Table E.18. LAND scenario - 30%: Changes in the existing structure of the base case cluster. The table shows processes removed (in red), and remain in the cluster (in green). For details on the processes, see Appendix A, Tables A.1 and A.2.

Process ID	Sol 1	Sol 2	Sol 3	Sol 4	Sol 5	Sol 6	Sol 7	Sol 8	Sol 9
A1									
A2									
A3									
B1									
B2									
CL1									
CL2									
CL3									
CL3.1									
CL4									
CL5									
CL6									
CL8									
E1									
E2									
E3									
E6									
M1									
M4									
M6.1									
M6									
M7									
N7									
N8									
O1									
P1.1									
P1									
P3									
P3.1									
P4									
P6									
P7									
P8									
U1									
U2									
U6 - 1									
U6 - 2									

The chapter specific supplementary information (SI) are provided in the 4TU Research Data repository: https://doi.org/10.4121/356e7b5f-72e4-4801-98b4-bcb19f9accec. SI includes additionally:

- Optimisation results per scenario:
  - Changes in the cluster performance and TEE indicators.

LIST OF PUBLICATIONS AND CONFERENCE APPEARANCES

Publications

- Stepchuk, I., Pérez-Fortes, M., & Ramírez, A. R. (2023). Impacts of defossilising downstream derivatives in petrochemical clusters – MTBE case study. In Computer Aided Chemical Engineering (Vol. 52, pp. 2429–2434). https://doi.org/10.1016/B978-0-443-15274-0.50386-3
- Stepchuk, I., Pérez-Fortes, M., & Ramírez, A. (2025). Assessing impacts of deploying bio-based isobutene for MTBE production in an existing petrochemical cluster. Journal of Cleaner Production, 503, 145114. https://doi.org/10.1016/j.jclepro.2025.145114
- Stepchuk, I., Pérez-Fortes, M., & Ramírez, A. (2025). From Feedstock to Future Chemicals: Rethinking Carbon Sources in Industrial Propylene Clusters. ACS Sustainable Chemistry & Engineering, 13(42), 17869–17880. https://doi.org/10.1021/acssuschemeng.5c05287
- Stepchuk, I., Pérez-Fortes, M., & Ramírez, A. (2026). Navigating industrial transition: understanding trade-offs in defossilising downstream petrochemical production. (submitted to Journal of Industrial Ecology, February 2026, in peer review)

Conference appearances

- 2023, June 18th – 21st, 33rd European Symposium on Computer-Aided Process Engineering (ESCAPE 33), Athens, Greece. Impacts of defossilising downstream derivatives in petrochemical clusters – MTBE case study. (Poster presentation)
- 2024, February 2nd, NWO NERA Energy Symposium 'Energy Transition - Collaborating towards a Sustainable Future', Utrecht, the Netherlands. Impacts of defossilising downstream derivatives in petrochemical clusters – MTBE case study. (Poster presentation)
- 2024, June 26-28th, Process Development Symposium Europe (2024 PDS Europe), Nancy, France. Pivotal aspects for decision-makers to keep in mind while defossilising interconnected petrochemical subclusters. (Oral presentation)
- 2024, October 8-9th, 19th Netherlands Process technology Symposium (NPS 19), Groningen, the Netherlands. Techno-economic and environmental impacts of replacing fossil-based processes in the propylene subcluster in the Port of Rotterdam. (Oral presentation)

CURRICULUM VITAE

Inna Stepchuk was born on 24 July 1992 in Kyiv, Ukraine. She obtained her Bachelor's and Master's degrees in Mechanical Engineering of Chemical Production at the National Technical University of Ukraine "Igor Sikorsky Kyiv Polytechnic Institute," graduating with distinction (cum laude) among the top students in her cohort.

At the start of her career, she worked as a Process Engineer at the National Academy of Sciences of Ukraine, where she led engineering projects focused on integrating heat pump systems for government organisations and small- to medium-sized companies. She later moved into consulting and project management at EY in Ukraine, where she supported financial and operational processes across multidisciplinary projects.

In 2019, she completed a second Master's degree in Management and Engineering of Environment and Energy (ME3) at KTH Royal Institute of Technology in Sweden through the ERASMUS MUNDUS programme, supported by an EU scholarship awarded to top-ranked candidates. After graduating, she worked as a Climate and Energy Research Analyst at Perspectives Climate Group in Germany, advising governments, development banks, and international organisations on industrial decarbonisation, energy efficiency, and climate policy. Throughout her work, she has closely collaborated with industrial partners and policy stakeholders, contributing to the development of strategic roadmaps and decision-support tools for industrial transformation. Later same year, she has joined Forte Renewables in the Netherlands as a Strategic Project Advisor, contributing to technical due diligence and market assessments for renewable energy investments.

Since 2020, Inna has been affiliated with Delft University of Technology. She started at faculty of Applied Sciences as a Clean Energy Analyst and Project Coordinator in a Horizon 2020 programme on sustainable aviation fuels, and in 2021 began her PhD journey at the Faculty of Technology, Policy and Management.

ACKNOWLEDGMENTS

"Світ не без добрих людей."
The world is not without kind people.(Ukrainian proverb)

When I started my PhD, at first, I thought the biggest challenge of the next years would be the research itself. Of course, there were the classic PhD experiences: models that refused to cooperate, analyses that worked perfectly right up until the moment I needed to submit the paper, papers that returned with more comments than original text, and deadlines that somehow kept arriving much faster than expected. There was also the constant feeling that you are not enough and there was always one more thing to do: because, as every PhD student knows, there is always one more thing to do.

What surprised me most, however, was that life did not stop while I was doing a PhD.

Over the last five years, I experienced life events I could never have imagined when this journey began. Some were joyful, some were difficult and sad, and some completely changed the way I see the world now. There were moments when the PhD felt overwhelming, but there were also moments when the PhD was honestly the easiest thing I was dealing with that week.Not many people truly understood what these years looked like for me behind the scenes. That is why I am especially grateful to those who supported me not only as a PhD researcher, but as a person.

First and foremost, I would like to thank my supervisors, **Andrea and Mar**, for your guidance, patience, trust, and, most importantly, for always being there for me throughout this journey. I always joked that I was probably your most "problematic" PhD student, not because of the research, but because there always seemed to be a new plot twist happening in my life. Our progress meetings often started with the PhD, took a little detour through life updates, and somehow ended with you checking whether I was doing okay. Thank you for believing in me, especially when my confidence disappeared faster than my simulation results, and for reminding me that I was capable even when I sometimes forgot it myself.

A very special thank you goes to my office family, **Tonny and Michael**. Somewhere along the way, you became much more than my colleagues. You were there for the long days, the setbacks, the breakthroughs, and many of the life events that happened far beyond the walls of the office. We shared laughs, frustrations, celebrations, random conversations, serious conversations, and the occasional comfortable silence while pretending to work. Thank you for always being there, for helping me keep things in perspective, and for making this journey far lighter (and far more enjoyable!) than it had any right to be.

I am also deeply grateful to my dear friends and colleagues **Josephine, Jessie, Thijmen, Shiva, Paola, Erik, Ajay and Brendon**. Thank you for being part of this journey in so many different ways. Whether it was a casual coffee, a shared laugh, a quick check-in, or a longer conversation about life and everything in between, your presence made a real difference.

To **Vesna, Svenja and Siva**, thank you for the long walks and even longer conversations. Some of the best ideas, life lessons, and problem-solving sessions happened while walking. It turns out that moving forward physically is also quite useful when trying to move forward mentally.

To **Zofia Lukszo** thank you for supporting me and my family during some of the hardest moments of these years. Your kindness, compassion, and willingness to help made a difference when it was needed most.

To the Green Village community, especially **Marjan Kreijns, Veronique, Jean-Paul, Lidewij and Tim**, thank you for making me feel welcome and for making me and my family truly feel part of the community. You gave me and my parents not just a place to stay, but a home away from home during a time when that meant more than words can describe. Moreover, you always went beyond what was expected of you, checking in on us and offering your support when we needed it most. I will always be deeply grateful for your kindness, support, and compassion.

To my dear friends **Vika, Maria, Ira Litus, Ira Andrzhievskaja, Alex Kalko, and Alex Grygorenko** thank you for being far away but somehow always nearby. No matter the distance, you were there with advice, support, encouragement, and much-needed laughter. You have been my map, my radar, and occasionally my emergency response team.

To my parents, **Iryna and Vasyl Stepchuk**, thank you for your unconditional love, support, and belief in me. Even while facing your own challenges, you always encouraged me to keep going and never give up. To my father, in loving memory, thank you for teaching me to finish what I start, to keep going through difficult times, and to always look for the light, even in the darkest moments. Your curiosity, love for learning, and interest in life have inspired me more than you probably ever realized. Your strength and spirit will always stay with me. To my mother, thank you for your endless love, care, patience, and support. You have always been there for me, especially when I needed it most, and you believed in me even when I struggled to believe in myself. You have been a constant source of comfort throughout this journey, and I am truly grateful to have you by my side.

To my parents-in-law, **Veerakumar and Uma** and sister-in-law, **Soumyaa**, thank you for your kindness, love, and support throughout these years. Thank you for always welcoming me as part of the family, for being there through both the good and difficult moments, and for making me feel supported and cared for. Your warmth, patience, and encouragement have meant more to me than you probably realise. I am truly grateful to have you in my life and to have had your support throughout this journey.

A very special thank you goes to my husband, **Kartik**, for always being my anchor throughout these years. We went through far more together than either of us could have imagined when this PhD began, and somehow managed to survive both the PhD and everything life decided to throw at us along the way. Through every challenge, uncertainty, and change, you stayed by my side, even when I was probably not the easiest person to deal with. Thank you for your patience, love, endless support, and for always helping me find my way when I felt lost or overwhelmed. You have seen almost every chapter of this journey up close, and I could not have asked for a better person to have beside me through it all.

Looking back, this PhD was about much more than research. It taught me lessons that no paper, model, or analysis ever could. I learned that life rarely follows the plans we carefully make, that not everything can be controlled, and that every person walks their own unique path, despite the same starting point. I learned that during difficult times, simply taking the next step is sometimes a victory in itself. Most importantly, I learned that achievements matter far less than the people who stand beside you along the way.

This thesis may be the final result, but in the end, it was those people who made even the hardest moments bearable. For all of that, and for all of you, I am deeply grateful.

"І все на світі треба пережити, і кожен фініш - це, по суті, старт."
"All things in life must be and must be endured…
And every ending is, in truth, a new beginning."
from poem "Wings" by Lina Kostenko

Inna Vasylivna STEPCHUK

REFOCUSING DEFOSSILISATION STRATEGIES:
The role of downstream production in transforming petrochemical clusters

The European chemical industry remains strongly dependent on fossil-based feedstocks, making its defossilisation particularly challenging. In response, growing attention has been directed toward defossilising chemicals building blocks such as methanol and ethanol, from alternative carbon sources (ACS), including biomass, CO_2, and waste. In contrast, the potential of producing downstream derivatives (DDs) directly from ACS has received limited attention. Although these alternative pathways present promising opportunities, replacing fossil-based DD production within established petrochemical clusters may trigger cascading effects across interconnected value chains. Such system-wide implications, however, remain insufficiently explored and understood. This thesis therefore investigates the extent to which the transition to ACS-based DD production influences system interactions, operational performance, and structural changes across multiple levels of a representative petrochemical cluster, using the Port of Rotterdam in the Netherlands as a case study.