The betwONE

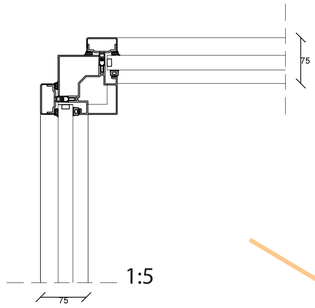

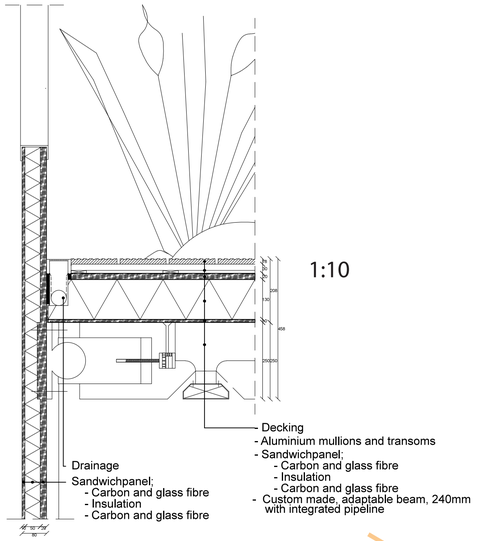

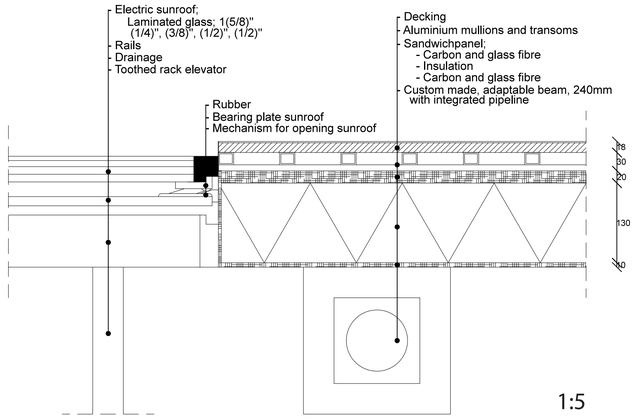

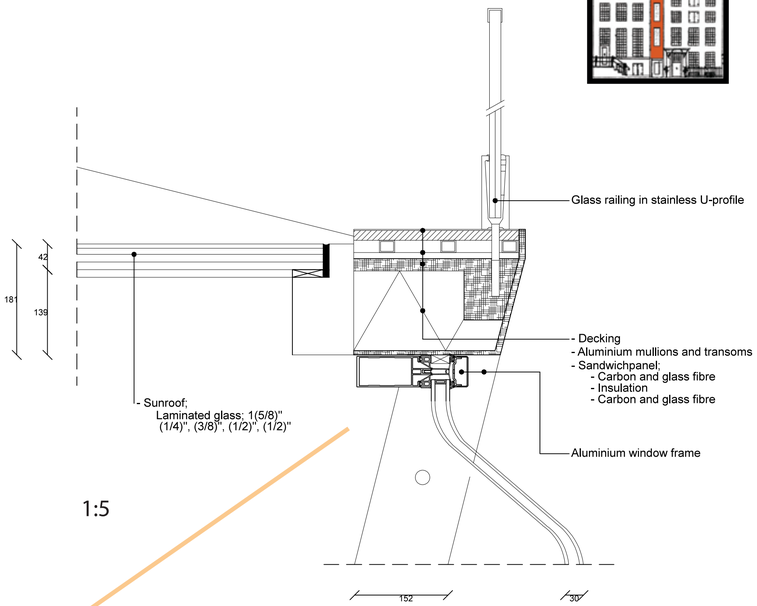

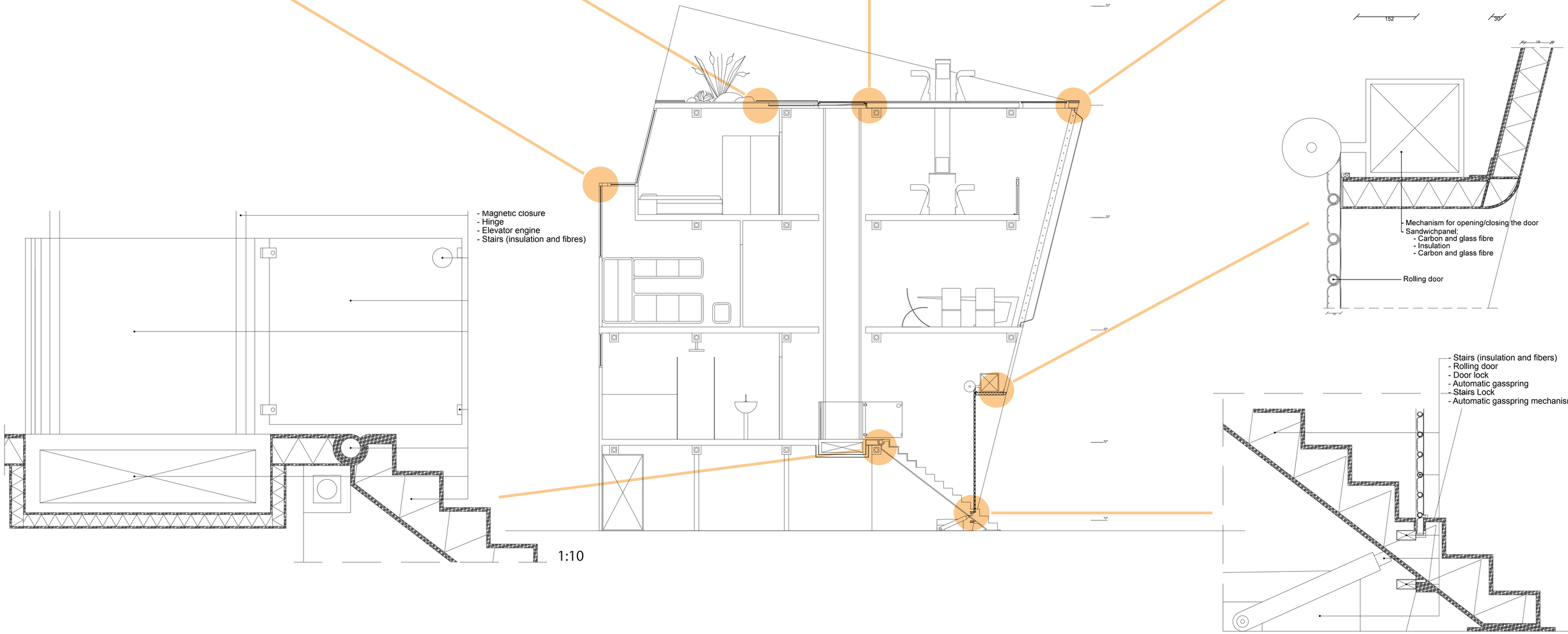

TU Delft

Name: Bouwe Verlaan

Tutors: Anne Snijders, Marcel Bilow

STOCK FLOW MAKE

Date: 27-01-2017