(19) NL Octrooicentrum

(11) 2006794

(12) C OCTROOI

(21) Aanvraagnummer: **2006794**

(22) Aanvraag ingediend: **17.05.2011**

(51) Int.Cl.:
A61M 15/02 (2006.01) ***B05B 5/025*** (2006.01)

(43) Aanvraag gepubliceerd:
-

(47) Octrooi verleend:
20.11.2012

(45) Octrooischrift uitgegeven:
28.11.2012

(73) Octrooihouder(s):
Gilbert Technologies B.V. te Naarden.

(72) Uitvinder(s):
Johannes Cornelis Maria Marijnissen te Breda.
Caner Umit Yurteri te Delft.
Rein André Roos te Nocé (FR).

(74) Gemachtigde:
Dr. R. Jorritsma c.s. te Den Haag.

(54) **System for and method of delivering sprayed particles.**

(57) A particle delivery device for producing a spray of particles in an ambient gas at an ambient pressure includes a storage volume for a liquid substance; a nozzle having an inlet and an outlet, the nozzle inlet being coupled to the storage volume in fluid communication, and an electric supply for providing an electric field between the nozzle outlet and a counter electrode. The storage volume is gastight and is adapted to provide the liquid substance to the nozzle inlet at ambient pressure level. The electric supply is arranged to control a release of the liquid substance from the nozzle outlet by a control of the electric field.

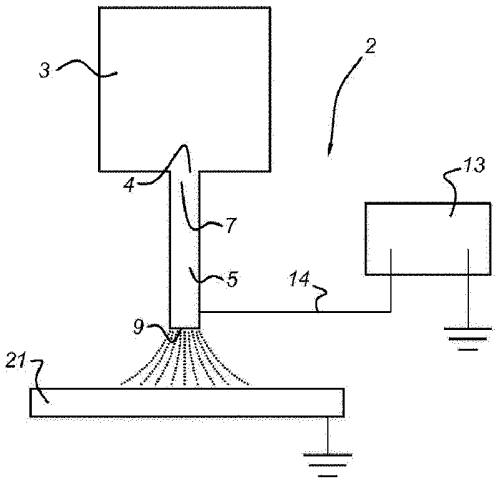

NL C 2006794

System for and method of delivering sprayed particles

Field of the invention

The invention relates to a method and system for delivering particles via electrostatic spraying (electrospray).

Background of the invention

Electro-hydrodynamic atomization (EHDA), or electrospraying, is a process where a liquid can be distributed into uniformly sized droplets or particles under the influence of an electrical force in a very controlled manner. EHDA may possess plenty of advantages in comparison to conventional systems, one of them being the relatively narrow size distribution of particles.

Figure 1 schematically shows a typical sprayed particle delivery system of the prior art.

In figure 1, the particle delivery system 1 comprises a reservoir 3 for holding a liquid substance, a nozzle 5 having an inlet 7 and an outlet 9 for releasing a spray of the liquid substance, a pump 2 for delivering the liquid substance from the reservoir to the nozzle, a counter electrode 21, a high voltage electric supply 13 for providing a high voltage electric field between the liquid at the outlet 9 of the nozzle 5 and the counter electrode 21.

The pump 2 is connected to the reservoir 3, and the reservoir is connected to the inlet 7 of the nozzle 5 via a conduit.

The pump 2 comprises a mechanical pump system 11 for pumping the liquid substance from the reservoir 3 to the nozzle 5. The pump system 11 is for example a piston pump or syringe pump.

The electric supply 13 is connected to the outlet 9 of the nozzle 5 via a conducting lead. The nozzle outlet 9 is located at some distance from the counter electrode 21 with the outlet 9 facing in the direction of the counter electrode 21. Both the counter electrode 21 and the electric supply 13 are connected to a common voltage level, e.g., ground voltage.

In the sprayed particles delivery device, the electric output provided by the electric supply 13 is typically in the range of nano-amperes at a high voltage (kV level) between the electrodes. The electric supply 13 provides an electric field between the

nozzle and the counter electrode 21. The liquid substance fed from the pump 2 is introduced into the electric field at the outlet 9 of the nozzle 5. The electric field between the nozzle outlet 5 and the counter electrode 21 causes the liquid substance to be atomized and distributed into uniformly sized droplets or particles with a spatial distribution.

The abovementioned sprayed particle delivery system has some drawbacks:

- It is known that to obtain a constant flow of the liquid substance by a mechanical pump system may be difficult. Small variations of the flow of liquid substance may influence the size and distribution of the sprayed particles from the nozzle outlet.
- It is also known that a most constant flow is typically obtained by a syringe type of pump. This type of pump system has relatively large size and weight which negatively affects the portability of the particle delivery system.

Summary of the invention

It is an object of the invention to reduce or mitigate the disadvantages from the prior art.

This object is achieved by a particle delivery device for producing a spray of particles in an ambient gas at an ambient pressure, comprising a storage volume for a liquid substance; a nozzle having an inlet and an outlet, the nozzle inlet being coupled to the storage volume in fluid communication; an electric supply for providing an electric field between the nozzle outlet and a counter electrode, wherein the storage volume is gastight, the storage volume is adapted to provide the liquid substance to the nozzle inlet at ambient pressure level, and the electric supply is arranged to control a release of the liquid substance from the nozzle outlet by a control of the electric field.

In this manner, no mechanical pump is required in the particle delivery device. The electric field generated between the liquid substance at the nozzle outlet and the counter electrode ejects the liquid substance in atomized form from the nozzle outlet which causes the electric supply to act as a pump since fresh liquid substance will be supplied into the nozzle from the storage volume.

By providing that the liquid substance in the storage volume is at ambient pressure, the back pressure during the spraying procedure remains constant. This ensures that the supply of liquid from the storage volume remains substantially in balance with respect

to the amount of liquid ejected (i.e., the release or release rate) from the nozzle and virtually a zero underpressure is maintained.

Also, since the spraying rate (flow rate) is well controlled by the electric supply, the present invention simplifies the control procedure of the particle delivery device. As the flow rate has a relatively strong effect on the size of the particles produced, the control of the size of particles and the size distribution is enhanced. Additionally, the electric field as driving force can be kept substantially constant which results in a well controlled and constant flow rate.

Since as explained above, no mechanical pump is required in the particle delivery device, the particle delivery system has an advantage in that it can be relatively compact, even portable, due to the absence of such a mechanical pump.

The fact that the storage volume can adapt its shape as function of the consumption of the liquid allows the pressure of the liquid in the storage volume to remain equal to the pressure of the ambient. The ambient pressure may be any suitable pressure within a space in which the particle delivery device is installed. In an exemplary embodiment, the ambient pressure is atmospheric pressure.

According to an aspect of the invention, there is provided a particle delivery device as described above, wherein the nozzle is conductive.

The conductivity of the nozzle provides that the nozzle functions as an electrode to electrically charge the liquid substance.

According to an aspect of the invention, there is provided a particle delivery device as described above, wherein the nozzle is a capillary needle.

According to an aspect of the invention, there is provided a particle delivery device as described above, wherein the storage volume is a container with at least one moveable wall.

The moveable wall floating on the liquid substance provides that the liquid substance is substantially isolated from the ambient while the movement of the wall on top of the liquid allows the pressure of the liquid in the storage volume to remain equal to the pressure of the ambient.

According to an aspect of the invention, there is provided a particle delivery device as described above, wherein the storage volume is a container with at least one flexible wall.

According to an aspect of the invention, there is provided a particle delivery device as described above, wherein the container comprises side walls and the at least one moveable wall is adapted to move between the side walls in a direction parallel to the side walls.

According to an aspect of the invention, there is provided a particle delivery device as described above, wherein the storage volume is a plastic capsule having a foil wall.

A foil wall is known to have a virtually nonexistent strength under compression and will collapse (i.e. deform) until the external pressure is in equilibrium with the internal pressure in the capsule.

According to an aspect of the invention, there is provided a particle delivery device as described above, wherein the storage volume consists of a pouch or bag with a foil wall.

According to an aspect of the invention, there is provided a particle delivery device as described above, wherein the storage volume comprises two foils of substantially identical area size, wherein the two foils are joined together at edges so as to create the storage volume in between the two foils.

According to an aspect of the invention, there is provided a particle delivery device as described above, wherein one or more of the two foils comprises at least one layer selected from a metallic layer and a plastic layer.

According to an aspect of the invention, there is provided a particle delivery system as described above, wherein the capillary needle is dimensioned with an internal diameter and a length in such a way that the capillary needle locks the storage volume by means of the capillary force, if no electric field is present.

According to an aspect of the invention, there is provided a particle delivery device as described above, wherein the capillary needle further comprises a seal on its outlet.

Advantageously, the capillary needle can be kept sealed during pre-use, e.g. during transport or shelf storage.

According to an aspect of the invention, there is provided a particle delivery device as described above, wherein the internal diameter of the capillary needle is about 1 mm or less, preferably 250 micrometer or less, very preferably 100 micrometer or less.

Advantageously, the range of the internal capillary diameter is chosen such that in absence of an electric field, the capillary force allows the liquid to fill the volume of the capillary needle. The diameter of the capillary needle may depend on flow properties of the liquid substance, such as the viscosity. Also, the diameter may depend on the specific application of the particle delivery device.

According to an aspect of the invention, there is provided a particle delivery device as described above, wherein the length of the nozzle is around 5 mm, but other lengths are feasible depending on the application and the liquid substance that is to be atomized.

According to an aspect of the invention, there is provided a particle delivery device as described above, wherein the counter electrode is a ring shaped electrode spaced apart from the nozzle.

The ring shape of the counter electrode provides an aperture for a flow of sprayed particles generated on the nozzle outlet when an electric field between the nozzle outlet and the counter electrode is applied.

According to an aspect of the invention, there is provided a particle delivery device as described above, wherein the counter electrode is a mesh shaped electrode spaced apart from the nozzle.

The mesh shape of the counter electrode provides an aperture for a flow of sprayed particles generated on the nozzle outlet when an electric field between the nozzle outlet and the counter electrode is applied.

According to an aspect of the invention, there is provided an inhaler device comprising a particle delivery device as described above.

The particle delivery system of the present invention can be advantageously applied in portable applications for delivery of medical components into the respiratory airways of beings. Due to the absence of a pumping system the particle delivery system can be dimensioned with relative ease for incorporation into an inhaler device. Also, since no pumping system is required, the power supply can be relatively small and portable since it needs to deliver only power for the generation of the spray which is as mentioned above in the order of micro- to milliwatts.

According to an aspect of the invention, there is provided an inhaler device as described above, further comprising an inhaler mask wherein the nozzle outlet is arranged either in the mask or in an air inlet of the inhaler mask.

According to an aspect of the invention, there is provided a method for producing a spray of particles in an ambient gas at an ambient pressure, comprising

- providing a particle delivery device that comprises:

a storage volume for a liquid substance; a nozzle having an inlet and an outlet, the nozzle inlet being connected to the storage volume; an electric supply for providing an electric field between the liquid substance at the nozzle outlet and a counter electrode; the method further comprising:

- providing the liquid substance in the storage volume, wherein the storage volume is gastight;
- creating the spray of particles at the nozzle outlet by the electric field,
- controlling a release of the liquid substance from the nozzle outlet by the electric supply using a control of the electric field and
- adapting the storage volume to provide the liquid substance at ambient pressure level at the nozzle inlet.

Brief description of the drawings

The invention will be explained in detail with reference to some drawings that are only intended to show embodiments of the invention and not to limit the scope. The scope of the invention is defined in the annexed claims and by its technical equivalents.

The drawings show:

Figure 1 shows a schematic drawing of a prior art particles delivery system;

Figure 2 shows a schematic drawing of a particles delivery system according to an embodiment of the invention;

Figure 3 shows a schematic drawing of a particles delivery system according to an embodiment of the invention;

Figure 4 shows a schematic drawing of a particles delivery system according to an embodiment of the invention.

Detailed description of embodiments

In figure 2, a particles delivery system according to an embodiment of the invention is shown. The particle delivering system 2 comprises a storage volume 3 for storing a liquid substance, a nozzle 5, having an inlet 7 and an outlet 9, a counter electrode 21, and a high voltage electric supply 13 for providing an electric field

between the liquid substance at the outlet 9 of the capillary needle 5 and the counter electrode 21.

The storage volume 3 is connected to the inlet 7 of the nozzle 5 via a passage 4. The storage volume is gastight except for the passage 4 to the nozzle 5. The passage 4 sets up a connection between the nozzle 5 and the reservoir 3 for fluid communication between the reservoir and the nozzle.

The passage is not necessarily directly connected to the nozzle but optionally may comprise a tubing or conduit between the storage volume 3 and the nozzle 5 for feeding the liquid substance from the storage volume to the nozzle.

The electric supply 13 is connected to either an electrode (not shown) that contacts the liquid substance in the particle delivery device or alternatively if the nozzle is conductive, to the outlet 9 of the nozzle 5 via conducting leads 14.

Note that the electrode that contacts the liquid substance may be located in either the storage volume or the nozzle.

The conducting leads 14 are arranged to provide electric contact either to the liquid substance in the nozzle directly, or to the nozzle itself, in case the nozzle is a conductive nozzle.

The nozzle 5 is spaced apart from the counter electrode 21 with the nozzle outlet 9 facing towards the counter electrode 21. The nozzle outlet 9 is connected to one terminal of one polarity on the electric supply 13, the counter electrode 21 is connected to another terminal of opposite polarity on the electric supply.

In an embodiment, both the counter electrode 21 and the other terminal of the electric supply 13 are connected to a common voltage, e.g. ground voltage.

In the particles delivery system according to this embodiment, an electric supply 13 is arranged as feeding device by using a control of the electric field. The electric field generated between the nozzle outlet and the counter electrode ejects the liquid substance in atomized form from the nozzle outlet and acts as pump since fresh liquid substance will be supplied from the storage volume into the nozzle.

Additionally, the storage volume 3 is adapted to provide the liquid substance to the nozzle inlet at ambient pressure level, basically by adapting its shape in such a way that the inner pressure in the storage volume is substantially equal to the outer ambient pressure. Due to the substantially constant pressure in the storage volume 3, the

influence of the pressure difference on the liquid flow rate from the storage volume 3 has been substantially eliminated.

In the particle delivery system, the electric field thus becomes a major driving force for transport of the liquid substance in the nozzle by spraying the liquid substance out from the nozzle 5.

Further, by providing that the pressure of the liquid substance is constant, fluctuations in the flow rate of the liquid can be reduced. Additionally, the electric field can be controlled so as to tune the size of the particles in the spray as substantially constant in time. As a result, a spray of fine and uniformly sized particles can be produced over relatively long periods of time.

The electric output provided by the electric supply 13 is in the range of nano-amperes at a high voltage (kV level). The delivered liquid is atomized and sprayed by the electric field provided between the nozzle 5 and the counter electrode 21.

In an embodiment, the counter electrode 21 has apertures through which the spray may pass into the ambient.

In an embodiment, the counter electrode 21 may be a ring shaped object or a mesh, spaced apart from the nozzle 5.

Other shapes of the counter electrode are conceivable depending on the specific utilization of the particle delivery system.

It will be appreciated that the nozzle outlet 9 can be positioned in any direction with respect to the surface level of the liquid substance in the storage volume.

In an embodiment, the nozzle is a capillary needle. By use of a capillary needle as nozzle, the liquid substance can be transported from the storage volume to the nozzle outlet using the capillary force in the needle.

Additionally, the capillary needle can be dimensioned in such a way that when no (high voltage) electric field is present at the nozzle outlet, the capillary forces block an uncontrolled outflow of the liquid substance and the capillary needle functions as a capillary lock.

Figure 3 shows a schematic drawing of a particles delivery system according to an embodiment of the invention. In figure 3, the storage volume 3 is a container with at least one moveable wall which by its movement provides that the storage volume is capable to provide the liquid substance to the nozzle inlet 7 at ambient pressure level.

When the storage volume 3 is filled with a liquid substance, the moveable wall is arranged to float on the liquid substance. Next, when the liquid substance is sprayed from the nozzle outlet 9, the moveable wall 61 is free to move and follow the level of the liquid in the storage volume 3 to achieve that the pressure in the storage volume is substantially equal to the ambient pressure.

In an embodiment, the storage volume 3 comprises parallel side walls 63, 65 and the at least one moveable wall 61 is adapted to move between the side walls 63, 65 in a direction parallel to the side walls 63, 65.

In an alternative embodiment, the storage volume 3 comprises parallel side walls 63, 65 and at least one flexible wall 61 that is adapted to move to adapt the volume of the storage volume.

Figure 4 shows a schematic drawing of a particles delivery system according to an embodiment of the invention.

In this embodiment of the particles delivery system, the storage volume 3 is arranged to dynamically adapt the shape of the storage volume based on an externally exerted pressure on the storage volume 3.

The storage volume 3 is constructed in a manner that when an amount of the liquid substance is taken out of the storage volume, the storage volume adapts its shape and reduces the inner volume of the storage volume accordingly, in such a way that the liquid substance in the storage volume remains at ambient pressure.

In this manner, the inner volume is reduced by the same amount as the liquid taken out, so as to balance the ambient pressure with the inner pressure of the storage volume.

The construction of the storage volume may comprise one or more walls that consist of foil materials. Examples of such storage volumes according to the present invention, comprise a bag or pouch with foil walls. The use of foil walls allows that the storage volume can collapse as a result of the outflow of the sprayed liquid substance as driven by the electric field.

The storage volume 3 comprises foil parts 201, 203 of substantially identical area size.

The two foil parts 201, 203 are joined together on their edges (e.g. by a weld) so as to create the storage volume between the two foils 201, 203. A passage opening 4 is

arranged on one of the edges, or in one of the foil parts. The storage volume is gastight except for the passage 4.

The foil(s) comprises at least one layer selected from a metallic layer and a plastic layer.

The foil material may comprise a plastic foil, e.g. polyethylene or polypropylene, or a metallic foil such as aluminum. Additionally, the foil material may comprise a plastic foil coated with a thin film coating comprising a metal.

Moreover, the foil(s) may consist two or more foil layers laminated to each other.

Alternatively, the storage volume may comprise a blown extruded plastic foil with circular cross section with joined upper and lower edges 205, 207. In yet another embodiment of the invention, the storage volume 3 is a plastic capsule having foil walls with a passage 4 for coupling to the nozzle 5.

Advantageously, the particle delivery system can be arranged within an inhaler device for administering sprayed liquid substance to a being.

The outlet 9 of the capillary needle 5 and the counter electrode 21 are positioned within the inhaler that is intended to be directed to the mouth and/or nose of the being, such that during use a spray generated at the capillary outlet can be directed into the airways of the being.

In a further embodiment the inhaler comprises an inhaler mask. which can be placed over the airways (mouth and/or nose) of a being that needs to be administered with a sprayed liquid substance. Since the particle delivery device is capable of an enhanced control of particle sizes and size distribution, the inhaler device advantageously allows that based on the produced particle size, particles of a sprayed liquid substance can be directed selectively to a specific region of the respiratory system.

In an embodiment of the particle delivery device, the capillary needle 5 further comprises a seal (not shown) on the capillary needle 5. The seal can provide a secure delivery of the liquid substance preventing exposure of the liquid to the ambient. Advantageously, the capillary needle 5 can be kept sealed e.g. during shelf storage or transport.

The range of the capillary needle diameter and/or length may be chosen, individually or in combination, in dependence of the properties of the liquid substance

needed to be delivered as a spray. The properties of the liquid substance may include the viscosity, the density, the composition, etc.

Without any limitation of the invention the following examples for capillary needles are given. a suitable length of the capillary needle 5 can be around 5 mm An inner diameter of the capillary needle 5 is depending on the application and/or liquid substance to be electrosprayed and can be about 1 mm or less, or about 500 micrometer, or about 250 micrometer or less, or about 100 micrometer or less. As a further example, for production of particles for inhalation purposes a 30 gauge needle may be used as capillary needle. It has an inner diameter of 0.150 mm and is 6.35 mm in length.

The present invention also relates to a method for producing a spray of particles in an ambient gas at an ambient pressure, comprising

- providing a particle delivery device that comprises:

a storage volume 3 for a liquid substance; a nozzle 5 having an inlet 7 and an outlet 9, the nozzle inlet 7 being coupled to the storage volume 3 in fluid communication; an electric supply 13 for providing an electric field between the nozzle outlet 9 and a counter electrode 21,

the method further comprising:

- providing the liquid substance in the storage volume, wherein the storage volume is a gastight volume;

- creating the spray of particles by the electric field,

- controlling a release of the liquid substance from the storage volume 3 to the nozzle outlet by the electric supply 13 using a control of the electric field and

- adapting the storage volume to provide the liquid substance at ambient pressure level at the nozzle inlet.

The description is intended only to illustrate the invention. The examples described hereinabove are not intended to limit the scope of the invention, which is defined by the appended claims.

Conclusies

1. Deeltjes afgifte-inrichting voor het produceren van een deeltjesspray in een omgevingsgas op een omgevingsdruk, omvattend:
een opslagvolume (2) voor een vloeistof;
een buis (5) met een inlaat (7) en een uitlaat (9), waarbij de buisinlaat (7) gekoppeld is in fluïdum-verbinding aan het opslagvolume (2);
een elektrische voeding (13) voor het verschaffen van een elektrisch veld tussen de vloeistof bij de buisuitlaat (9) en een tegenelektrode (21),
waarbij het opslagvolume gasdicht is,
het opslagvolume is ingericht om de vloeistof te verschaffen aan de buisinlaat op omgevingsdrukniveau, en
de elektrische voeding (13) is ingericht om een afgiftesnelheid van de vloeistof vanuit de buisuitlaat te besturen door een besturing van het elektrisch veld.

2. Deeltjes afgifte-inrichting volgens conclusie 1, verder omvattend een elektrode om contact te maken met de vloeistof, en waarbij de elektrische voeding is verbonden aan de elektrode.

3. Deeltjes afgifte-inrichting volgens conclusie 2, waarbij de elektrode is geplaatst in de buis.

4. Deeltjes afgifte-inrichting volgens conclusie 2, waarbij de elektrode is geplaatst in het opslagvolume.

5. Deeltjes afgifte-inrichting volgens conclusie 1, waarbij de buis geleidend is en de elektrische voeding verbonden is aan de buis.

6. Deeltjes afgifte-inrichting volgens één van de voorgaande conclusies, waarbij de buis een capillaire naald is.

7. Deeltjes afgifte-inrichting volgens conclusie 1, waarbij het opslagvolume een container met ten minste één beweegbare wand.

8. Deeltjes afgifte-inrichting volgens conclusie 7, waarbij de container zijwanden omvat en de ten minste ene beweegbare wand is ingericht om te bewegen tussen de zijwanden, in een richting parallel aan de zijwanden.

9. Deeltjes afgifte-inrichting volgens conclusie 1, waarbij het opslagvolume een container met ten minste één flexibele wand is.

10. Deeltjes afgifte-inrichting volgens conclusie 1, waarbij het opslagvolume is ingericht om een vorm van het opslagvolume aan te passen op basis van een verschil tussen een druk in het opslagvolume en de omgevingsdruk.

11. Deeltjes afgifte-inrichting volgens één van de voorgaande conclusies 1 – 10, waarbij het opslagvolume (2) een plastic capsule met een foliewand is.

12. Deeltjes afgifte-inrichting volgens één van de voorgaande conclusies 1 – 10, waarbij het opslagvolume (2) twee folies (201, 203) met hoofdzakelijk gelijke oppervlaktegrootte omvat, waarbij de folies aan elkaar verbonden zijn aan de randen van de folies om het opslagvolume tussen de folies te vormen.

13. Deeltjes afgifte-inrichting volgens conclusie 11 of conclusie 12, waarbij de folie(s) ten minste één laag omvat(ten) die geselecteerd is uit een metallische laag en een kunststoflaag.

14. Deeltjes afgifte-inrichting volgens één van de voorgaande conclusies 6 – 13, waarbij de capillaire naald een zodanige inwendige diameter en lengte heeft dat de capillaire naald het opslagvolume afsluit door de capillaire kracht, wanneer geen elektrisch veld aanwezig is.

15. Deeltjes afgifte-inrichting volgens één van de voorgaande conclusies 6 – 14, waarbij de capillaire naald een afsluiting omvat aan de buisuitlaat.

16. Deeltjes afgifte-inrichting volgens één van de voorgaande conclusies 6 – 15, waarbij de inwendige diameter van de capillaire naald 1 mm of minder; bij voorkeur 250 micrometer of minder; met meer voorkeur 100 micrometer of minder is.

17. Deeltjes afgifte-inrichting volgens één van de voorgaande conclusies 6 – 16, waarbij de lengte van de buis ongeveer 5 mm is.

18. Deeltjes afgifte-inrichting volgens één van de voorgaande conclusies, waarbij de tegenelektrode een ringvormige elektrode is, op afstand geplaatst van de buis.

19. Deeltjes afgifte-inrichting volgens één van de voorgaande conclusies 1 – 17, waarbij een tegenelektrode een netvormige elektrode is, op afstand geplaatst van de buis.

20. Inhaleer inrichting omvattend een deeltjes afgifte-inrichting volgens één van de voorgaande conclusies 1 – 19.

21. Inhaleer inrichting volgens conclusie 20, voorts omvattend een inhaleermasker, waarbij de buisuitlaat is aangebracht ofwel in het inhaleermasker ofwel in een luchtinlaat van het inhaleermasker.

22. Werkwijze voor het produceren van een deeltjesspray in een omgevingsgas bij een omgevingsdruk, omvattend:
- verschaffen van een deeltjes afgifte-inrichting welke omvat:
een opslagvolume (2) voor een vloeistof; een buis (5) met een inlaat (7) en een uitlaat (9), waarbij de buisinlaat (7) gekoppeld is in fluïdum-verbinding aan het opslagvolume (2); een elektrische voeding (13) voor het verschaffen van een elektrisch veld tussen de vloeistof bij de buisuitlaat (9) en een tegenelektrode (21), waarbij de werkwijze voorts omvat:
-verschaffen van vloeistof in het opslagvolume, waarbij het opslagvolume gasdicht is,
- creëren van de deeltjesspray aan de buisuitlaat door het elektrisch veld,

- besturen van een afgifte van de vloeistof vanuit buisuitlaat (9) door de elektrische voeding (13) onder gebruikmaking van het elektrisch veld en
- aanpassen van het opslagvolume om de vloeistof op omgevingsdruk aan de buisinlaat te verschaffen.

Fig 1 (Prior art)

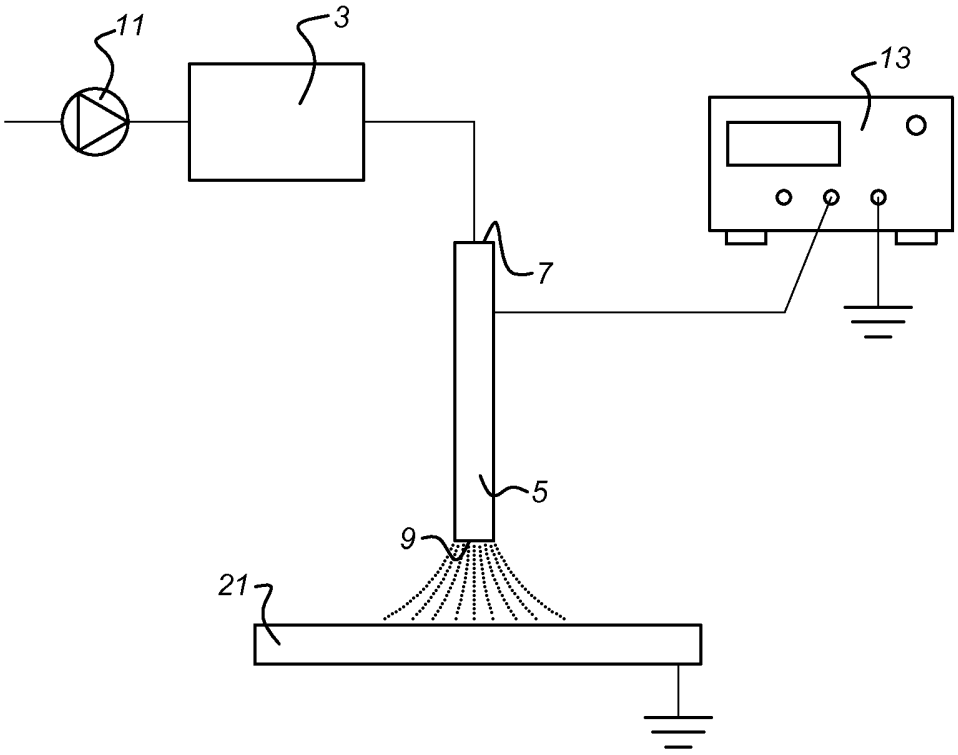

Fig 2

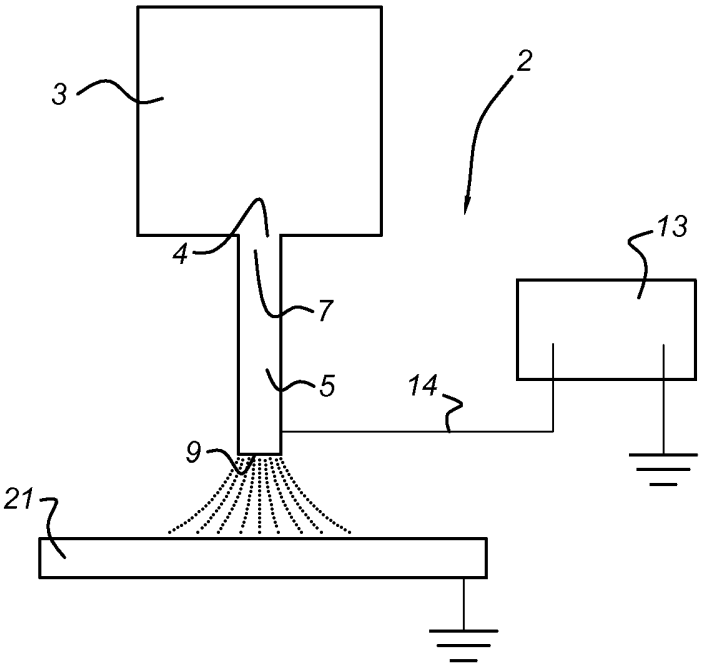

Fig 3

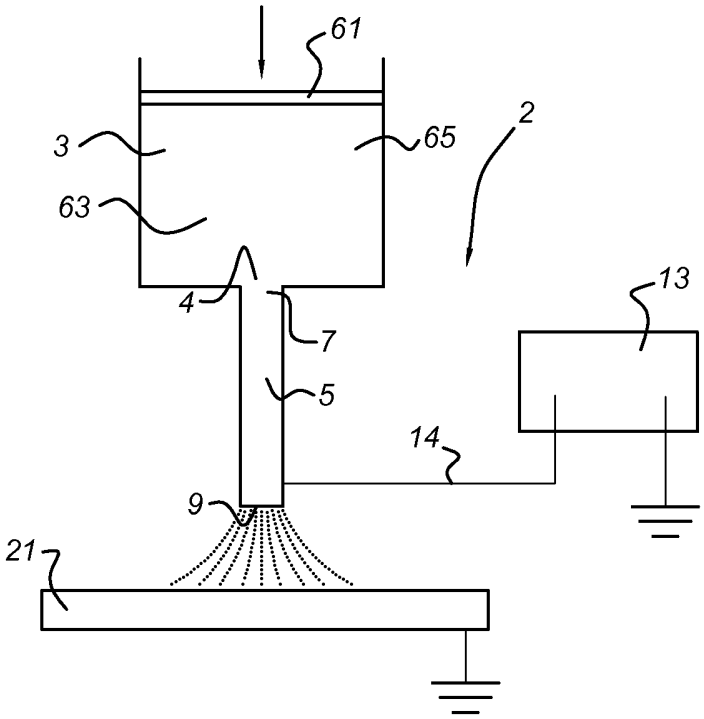

Fig 4

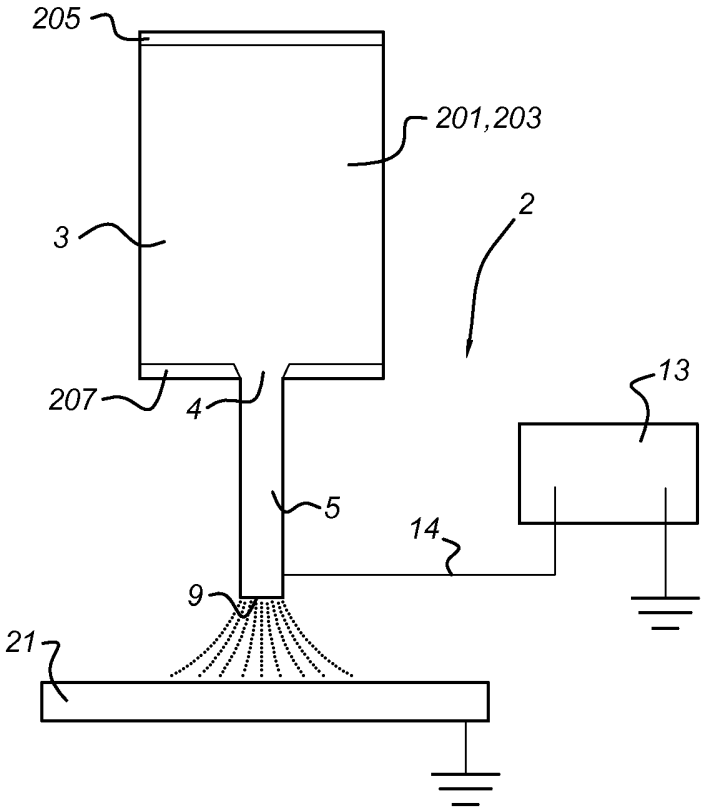

SAMENWERKINGSVERDRAG (PCT)

RAPPORT BETREFFENDE NIEUWHEIDSONDERZOEK VAN INTERNATIONAAL TYPE

IDENTIFICATIE VAN DE NATIONALE AANVRAGE	KENMERK VAN DE AANVRAGER OF VAN DE GEMACHTIGDE
	P6035165NL
Nederlands aanvraag nr. **2006794**	Indieningsdatum **17-05-2011**
	Ingeroepen voorrangsdatum
Aanvrager (Naam) **Technische Universiteit Delft**	
Datum van het verzoek voor een onderzoek van internationaal type **01-10-2011**	Door de Instantie voor Internationaal Onderzoek aan het verzoek voor een onderzoek van internationaal type toegekend nr. **SN 56939**

I. CLASSIFICATIE VAN HET ONDERWERP (bij toepassing van verschillende classificaties, alle classificatiesymbolen opgeven)

Volgens de internationale classificatie (IPC)

A61M15/02 **B05B5/025**

II. ONDERZOCHTE GEBIEDEN VAN DE TECHNIEK

Onderzochte minimumdocumentatie

Classificatiesysteem	Classificatiesymbolen	
IPC	**A61M**	**B05B**

Onderzochte andere documentatie dan de minimum documentatie, voor zover dergelijke documenten in de onderzochte gebieden zijn opgenomen

III.	☐	**GEEN ONDERZOEK MOGELIJK VOOR BEPAALDE CONCLUSIES**	(opmerkingen op aanvullingsblad)
IV.	☐	**GEBREK AAN EENHEID VAN UITVINDING**	(opmerkingen op aanvullingsblad)

Form PCT/ISA 201 A (11/2000)

ONDERZOEKSRAPPORT BETREFFENDE HET RESULTAAT VAN HET ONDERZOEK NAAR DE STAND VAN DE TECHNIEK VAN HET INTERNATIONALE TYPE

Nummer van het verzoek om een onderzoek naar de stand van de techniek
NL 2006794

A. CLASSIFICATIE VAN HET ONDERWERP
INV. A61M15/02 B05B5/025
ADD.

Volgens de Internationale Classificatie van octrooien (IPC) of zowel volgens de nationale classificatie als volgens de IPC.

B. ONDERZOCHTE GEBIEDEN VAN DE TECHNIEK

Onderzochte miminum documentatie (classificatie gevolgd door classificatiesymbolen)
A61M B05B

Onderzochte andere documentatie dan de mimimum documentatie, voor dergelijke documenten, voor zover dergelijke documenten in de onderzochte gebieden zijn opgenomen

Tijdens het onderzoek geraadpleegde elektronische gegevensbestanden (naam van de gegevensbestanden en, waar uitvoerbaar, gebruikte trefwoorden)

EPO-Internal, WPI Data

C. VAN BELANG GEACHTE DOCUMENTEN

Categorie °	Geciteerde documenten, eventueel met aanduiding van speciaal van belang zijnde passages	Van belang voor conclusie nr.
X	US 2003/209005 A1 (FENN, JOHN BENNETT [US]) 13 november 2003 (2003-11-13) * alinea [0012] - alinea [0018]; figuren * -----	1,2,5,6, 9,16-19, 22
A	WO 2006/009854 A2 (UNIV YALE [US]; GOMEZ, ALESSANDRO [US]; ET AL) 26 januari 2006 (2006-01-26) * bladzijde 16, regel 1 - bladzijde 22, regel 22; figuren 1-4 * -----	1,22

☐ Verdere documenten worden vermeld in het vervolg van vak C.

☒ Leden van dezelfde octrooifamilie zijn vermeld in een bijlage

° Speciale categorieën van aangehaalde documenten

"A" niet tot de categorie X of Y behorende literatuur die de stand van de techniek beschrijft

"D" in de octrooiaanvrage vermeld

"E" eerdere octrooi(aanvrage), gepubliceerd op of na de indieningsdatum, waarin dezelfde uitvinding wordt beschreven

"L" om andere redenen vermelde literatuur

"O" niet-schriftelijke stand van de techniek

"P" tussen de voorrangsdatum en de indieningsdatum gepubliceerde literatuur

"T" na de indieningsdatum of de voorrangsdatum gepubliceerde literatuur die niet bezwarend is voor de octrooiaanvrage, maar wordt vermeld ter verheldering van de theorie of het principe dat ten grondslag ligt aan de uitvinding

"X" de conclusie wordt als niet nieuw of niet inventief beschouwd ten opzichte van deze literatuur

"Y" de conclusie wordt als niet inventief beschouwd ten opzichte van de combinatie van deze literatuur met andere geciteerde literatuur van dezelfde categorie, waarbij de combinatie voor de vakman voor de hand liggend wordt geacht

"&" lid van dezelfde octrooifamilie of overeenkomstige octrooipublicatie

Datum waarop het onderzoek naar de stand van de techniek van internationaal type werd voltooid
29 december 2011

Verzenddatum van het rapport van het onderzoek naar de stand van de techniek van internationaal type

Naam en adres van de instantie
European Patent Office, P.B. 5818 Patentlaan 2
NL - 2280 HV Rijswijk
Tel. (+31-70) 340-2040,
Fax: (+31-70) 340-3016

De bevoegde ambtenaar
Innecken, Axel

ONDERZOEKSRAPPORT BETREFFENDE HET RESULTAAT VAN HET ONDERZOEK NAAR DE STAND VAN DE TECHNIEK VAN HET INTERNATIONALE TYPE

Informatie over leden van dezelfde octrooifamilie

Nummer van het verzoek om een onderzoek naar de stand van de techniek
NL 2006794

In het rapport genoemd octrooigeschrift	Datum van publicatie	Overeenkomend(e) geschrift(en)	Datum van publicatie
US 2003209005 A1	13-11-2003	GEEN	
WO 2006009854 A2	26-01-2006	GEEN	

Agentschap NL
Ministerie van Economische Zaken, Landbouw en Innovatie

WRITTEN OPINION

File No.	Filing date *(day/month/year)*	Priority date *(day/month/year)*	Application No.
SN56939	17.05.2011		NL2006794

International Patent Classification (IPC)
INV. A61M15/02 B05B5/025

Applicant
Technische Universiteit Delft

This opinion contains indications relating to the following items:

- ☒ Box No. I Basis of the opinion
- ☐ Box No. II Priority
- ☐ Box No. III Non-establishment of opinion with regard to novelty, inventive step and industrial applicability
- ☐ Box No. IV Lack of unity of invention
- ☒ Box No. V Reasoned statement with regard to novelty, inventive step or industrial applicability; citations and explanations supporting such statement
- ☐ Box No. VI Certain documents cited
- ☒ Box No. VII Certain defects in the application
- ☒ Box No. VIII Certain observations on the application

	Examiner
	Innecken, Axel

Application number

WRITTEN OPINION

NL2006794

Box No. I Basis of this opinion

1. This opinion has been established on the basis of the latest set of claims filed before the start of the search.
2. With regard to any **nucleotide and/or amino acid sequence** disclosed in the application and necessary to the claimed invention, this opinion has been established on the basis of:

   a. type of material:

   ☐ a sequence listing

   ☐ table(s) related to the sequence listing

   b. format of material:

   ☐ on paper

   ☐ in electronic form

   c. time of filing/furnishing:

   ☐ contained in the application as filed.

   ☐ filed together with the application in electronic form.

   ☐ furnished subsequently for the purposes of search.

3. ☐ In addition, in the case that more than one version or copy of a sequence listing and/or table relating thereto has been filed or furnished, the required statements that the information in the subsequent or additional copies is identical to that in the application as filed or does not go beyond the application as filed, as appropriate, were furnished.
4. Additional comments:

Box No. V Reasoned statement with regard to novelty, inventive step or industrial applicability; citations and explanations supporting such statement

1. Statement

Novelty	Yes:	Claims	3, 4, 7, 8, 10-18, 20, 21
	No:	Claims	1, 2, 5, 6, 9, 19, 22
Inventive step	Yes:	Claims	3, 4, 7, 8, 10-15, 20, 21
	No:	Claims	1, 2, 5, 6, 9, 16-19, 22
Industrial applicability	Yes:	Claims	1-22
	No:	Claims	

2. Citations and explanations

   see separate sheet

WRITTEN OPINION

Box No. VII Certain defects in the application

see separate sheet

Box No. VIII Certain observations on the application

see separate sheet

Novelty, inventive step, and industrial applicability (Item V)

Claim 1

1 Document **US2003/209005 (D1)** (see paragraph [0012] to paragraph [0018 and the figures) discloses a

Deeltjes afgifte-inrichting voor het produceren van een deeltjesspray 9 in een omgevingsgas op een omgevingsdruk, omvattend: een opslagvolume 1 voor een vloeistof 2; een buis 4 met een inlaat en een uitlaat, waarbij de buisinlaat gekoppeld is in fluïdum-verbinding aan het opslagvolume 1; een elektrische voeding 5 voor het verschaffen van een elektrisch veld tussen de vloeistof bij de buisuitlaat en een tegenelektrode 8, waarbij het opslagvolume 1 gas dicht is, het opslagvolume 1 is ingericht om de vloeistof 2 te verschaffen aan de buisinlaat op omgevingsdrukniveau, en de elektrische voeding 5 is ingericht om een afgiftesnelheid van de vloeistof 2 vanuit de buisuitlaat te besturen door een besturing van het elektrisch veld (see paragraph [0017], lines 39 to 41).

2 Thus, it appears that the subject-matter of claim 1 is not new.

Claims 2, 5, 6, 9, 19, and 22

3 The features or method steps, respectively, of claims 2, 5, 6, 9, 19, and 22 are also known from (D1) (loc. cit.). Thus, it appears that the method or subject-matter, respectively, of these claims is not new.

Claims 16 to 18

4 On the basis of the cited prior art and in view of the general knowledge of a skilled person it seems that the method or subject-matter, respectively, of claims 16 to 18 does not involve an inventive step.

Claims 3, 4, 7, 8, 10 to 18, 20, and 21

5 Claims3, 4, 7, 8, 10 to 18, 20, and 21 seem to meet the requirements of novelty, inventive step and industrial application.

Certain defects in the international application (Item VII)

6 Independent claims 1 and 22 are not drafted in the two-part form.

7 The description does not cite a document reflecting the closest background art.

Certain observations on the international application (Item VIII)

8 The wording of claim 14 tries to define the delivery device by an effect to be achieved which depends on the properties of the dispensed fluid.