BEAUTY IS TRUTH

Details

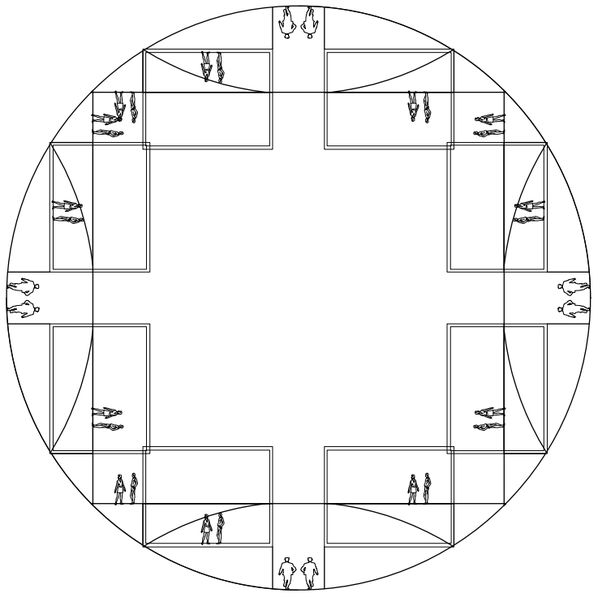

Coco van Weelden

May, 2016

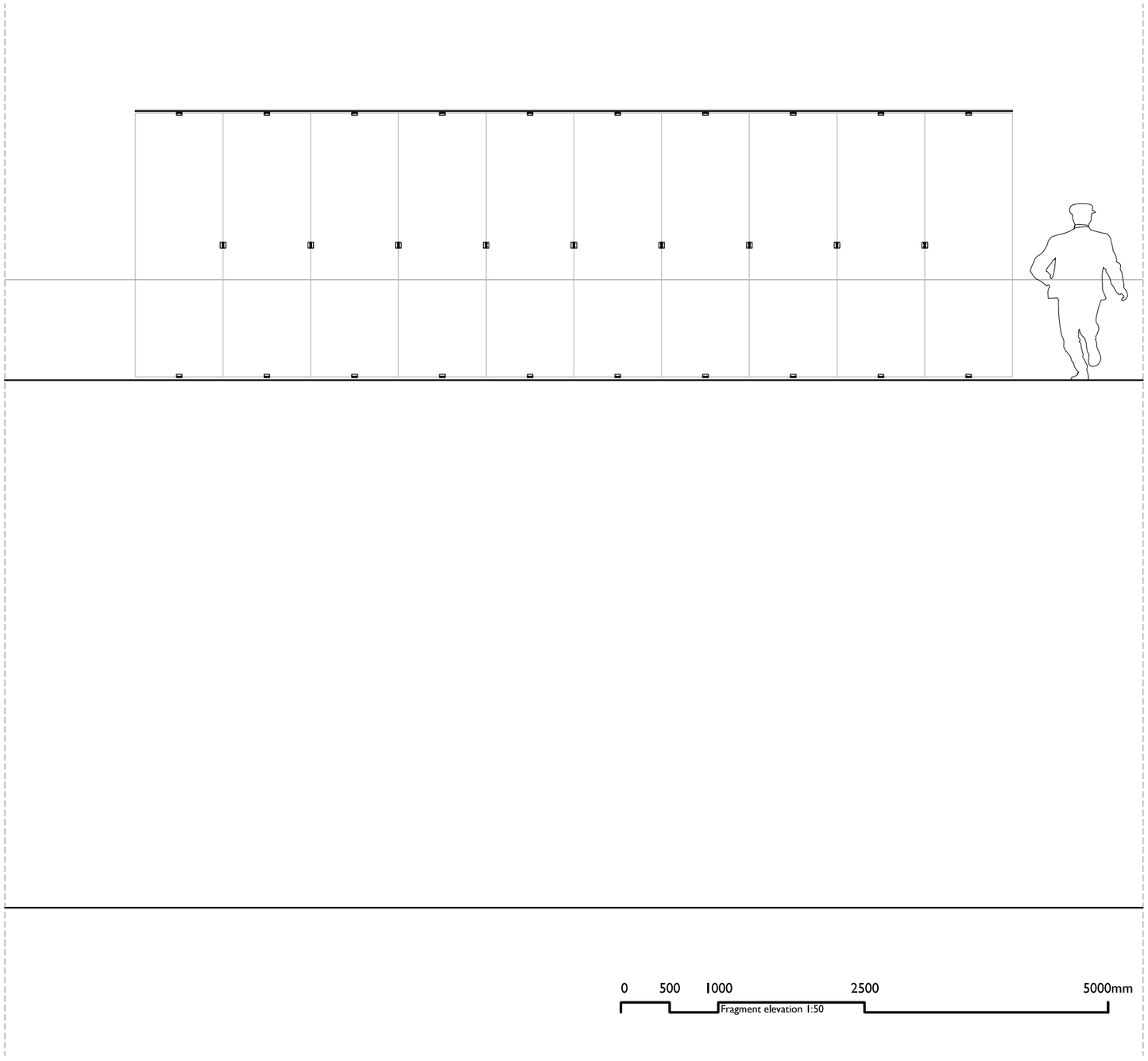
0
500
1000
2500
5000mm
Fragment elevation 1:50

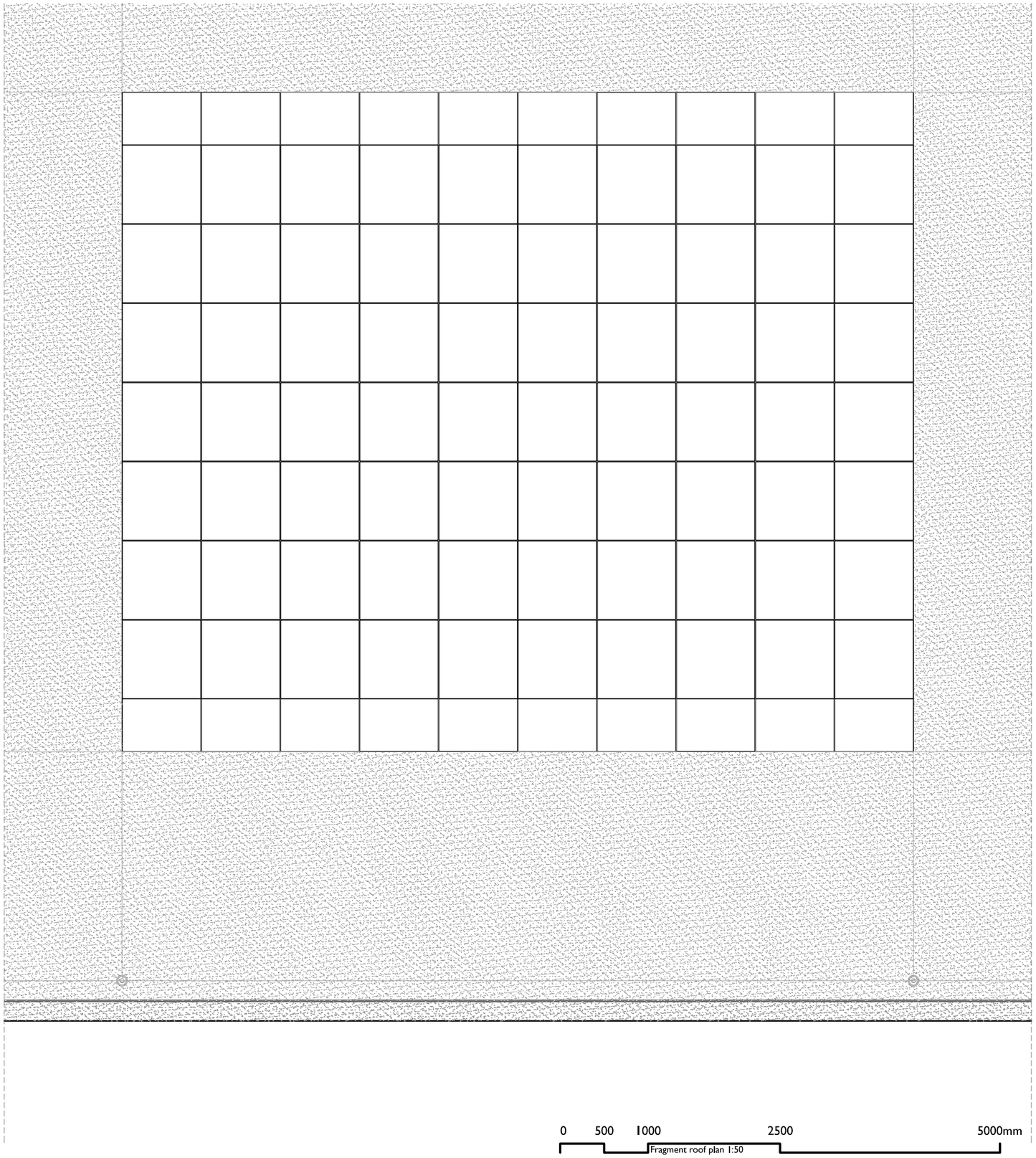

Fragment roof plan 1:50

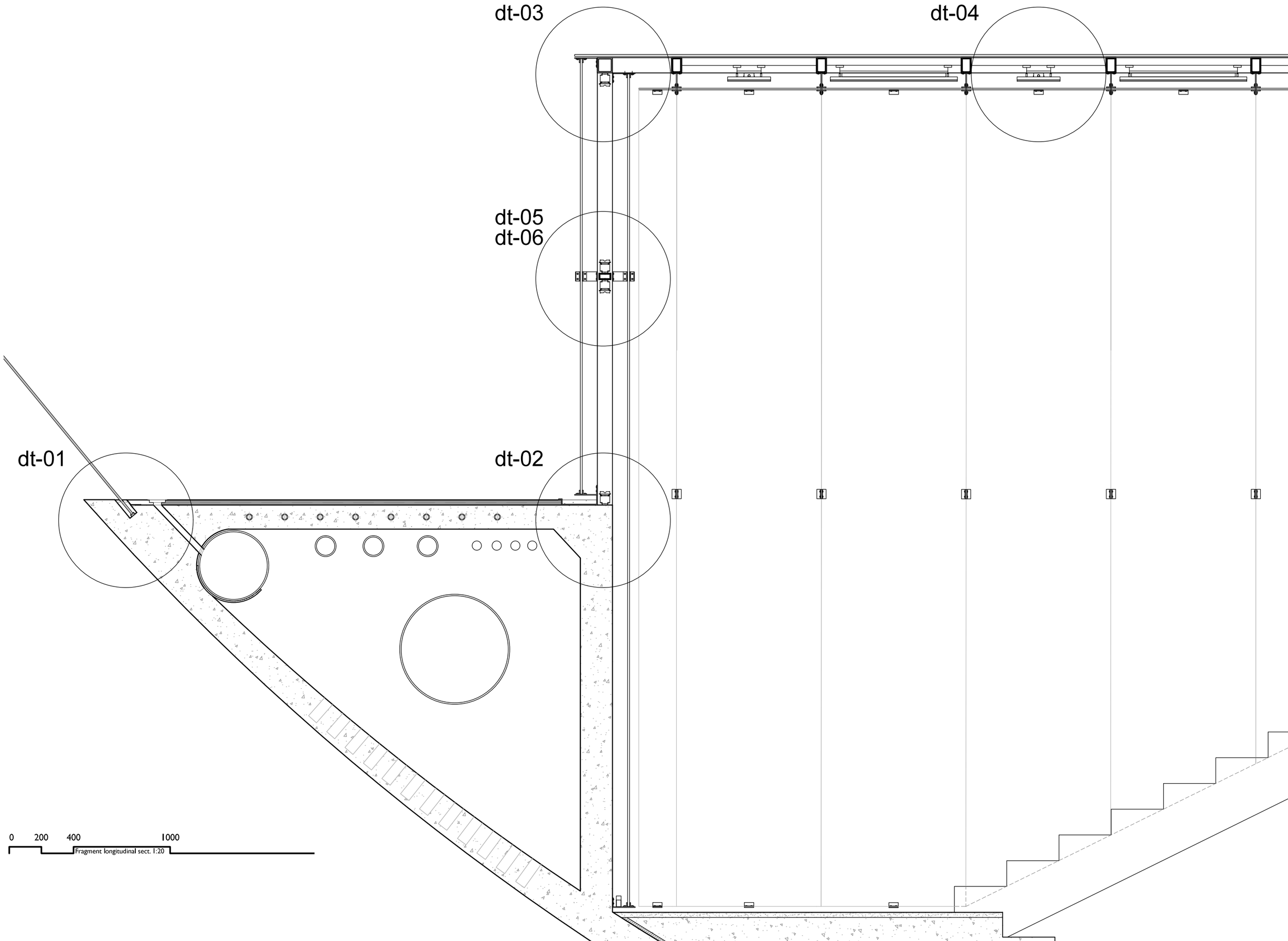
dt-03
dt-04
dt-05
dt-06
dt-01
dt-02
0
200
400
1000
Fragment longitudinal sect. 1:20

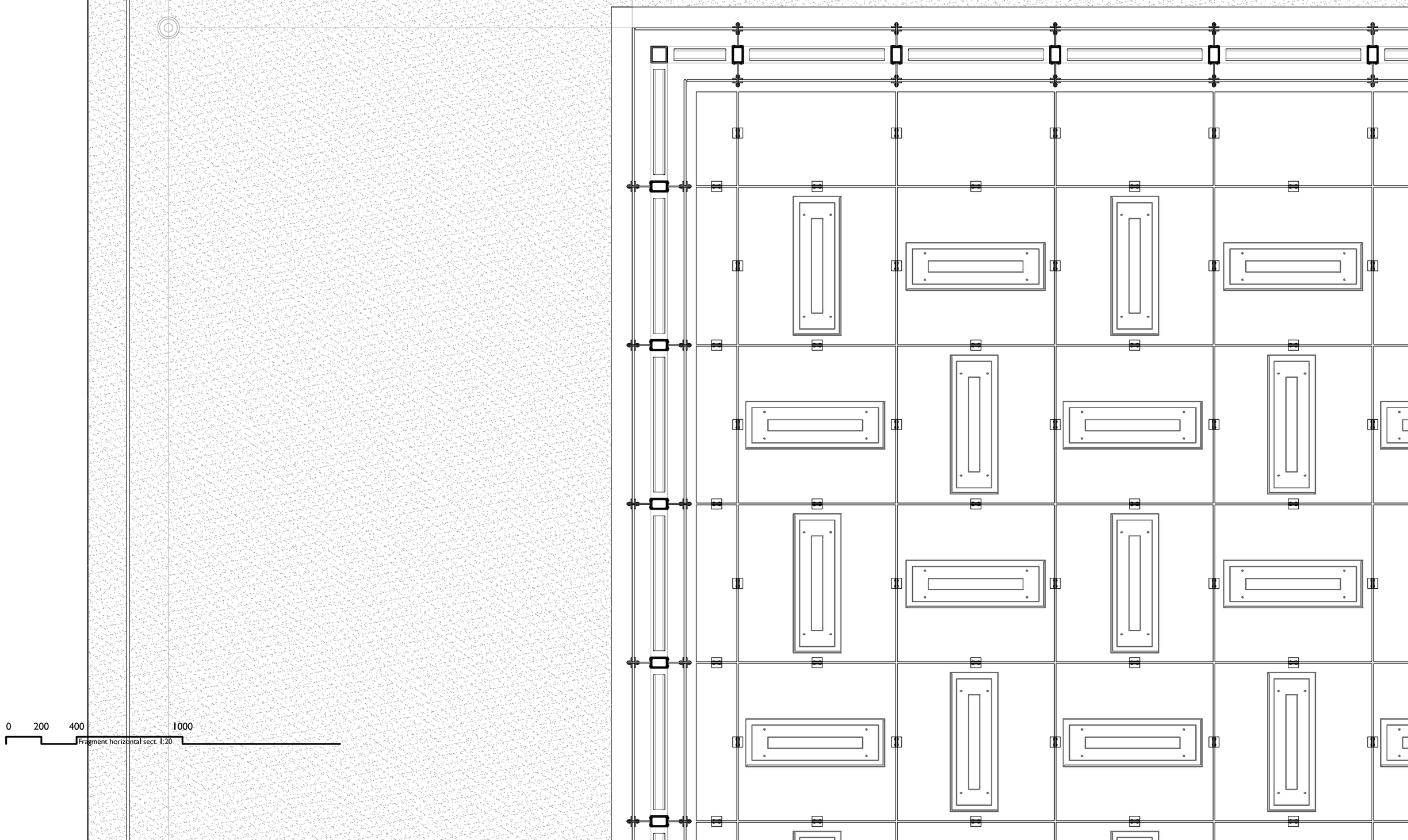
0
200
400
1000
Fragment horizontal sect. 1:20

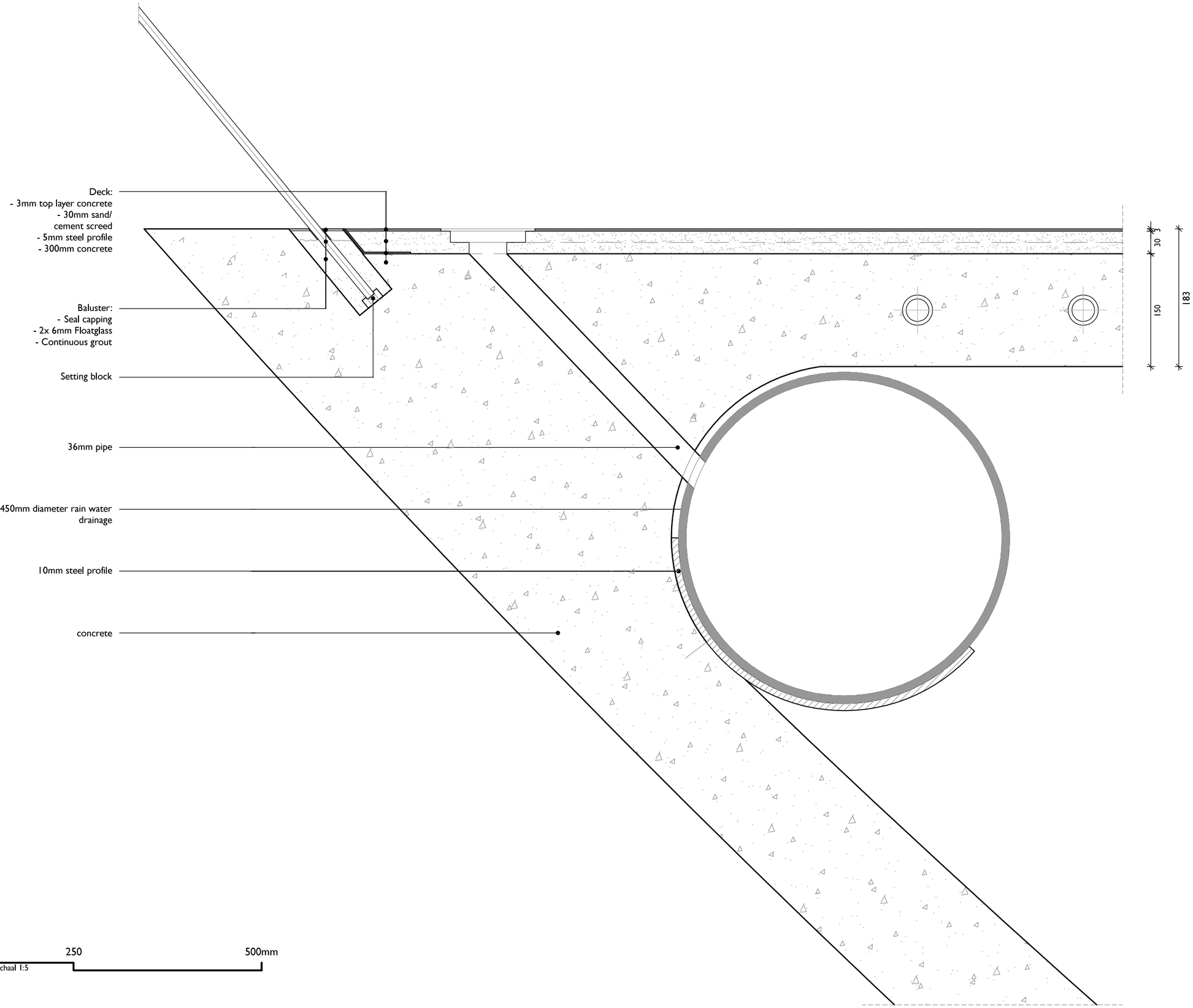

0 50 100 250 500mm

DT-01 schaal 1:5

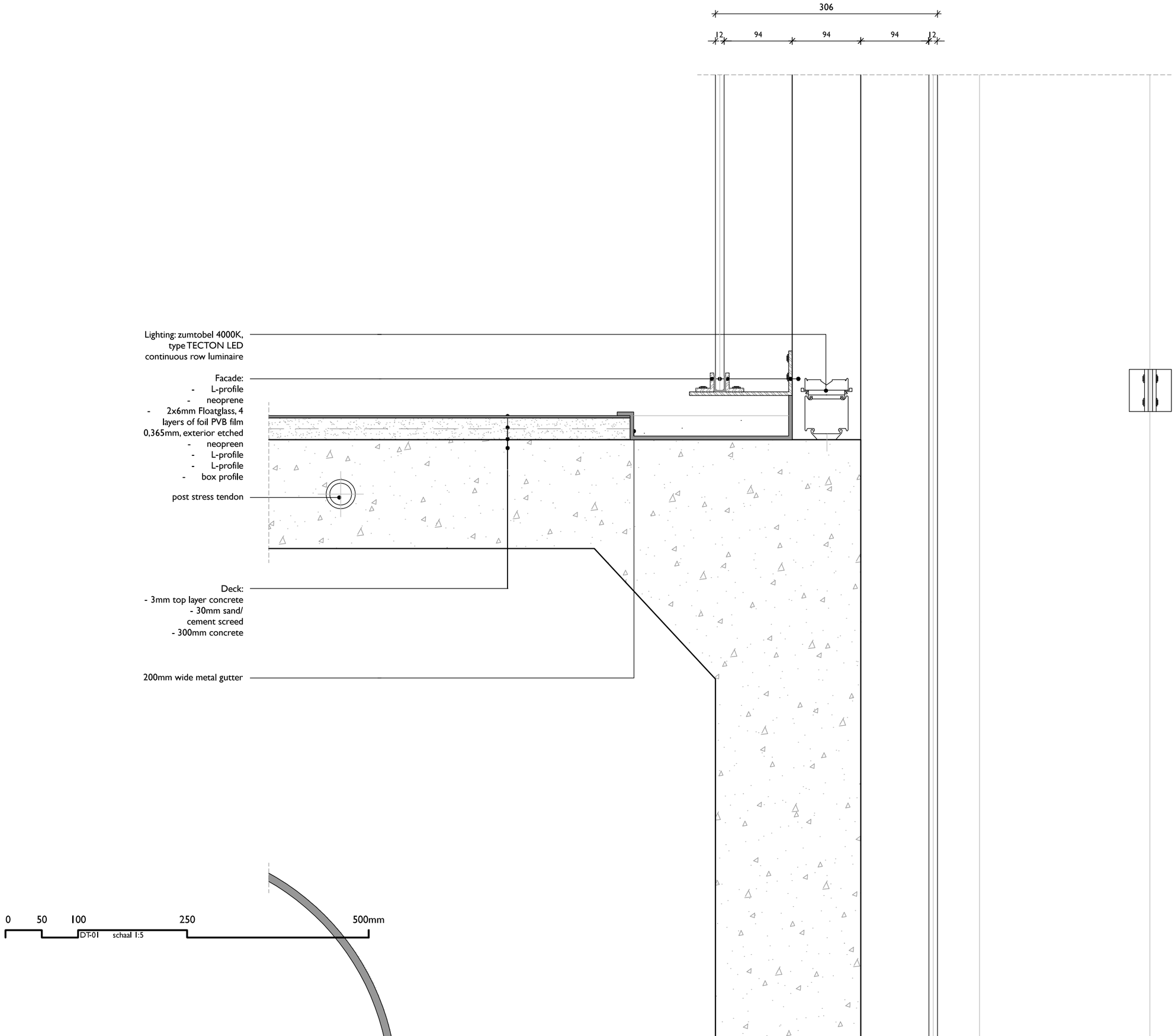
306
12
94
94
94
12
Lighting: zumtobel 4000K,
type TECTON LED
continuous row luminaire
Facade:
- L-profile
- neoprene
- 2x6mm Floatglass, 4
layers of foil PVB film
0,365mm, exterior etched
- neopreen
- L-profile
- L-profile
- box profile
post stress tendon
Deck:
- 3mm top layer concrete
- 30mm sand/
cement screed
- 300mm concrete
200mm wide metal gutter
0
50
100
250
500mm
DT-01
schaal 1:5

Roof:
- 2x6mm Floatglass, 4 layers of foil PVB film 0,365mm, exterior etched
- silicon joint
- steel structure box profile

Facade:
- L-profile
- neoprene
- 2x6mm Floatglass, 4 layers of foil PVB film 0,365mm, exterior etched
- neopreen
- L-profile
- L-profile
- box profile

Lighting: zumtobel 4000K, type TECTON LED continuous row luminaire

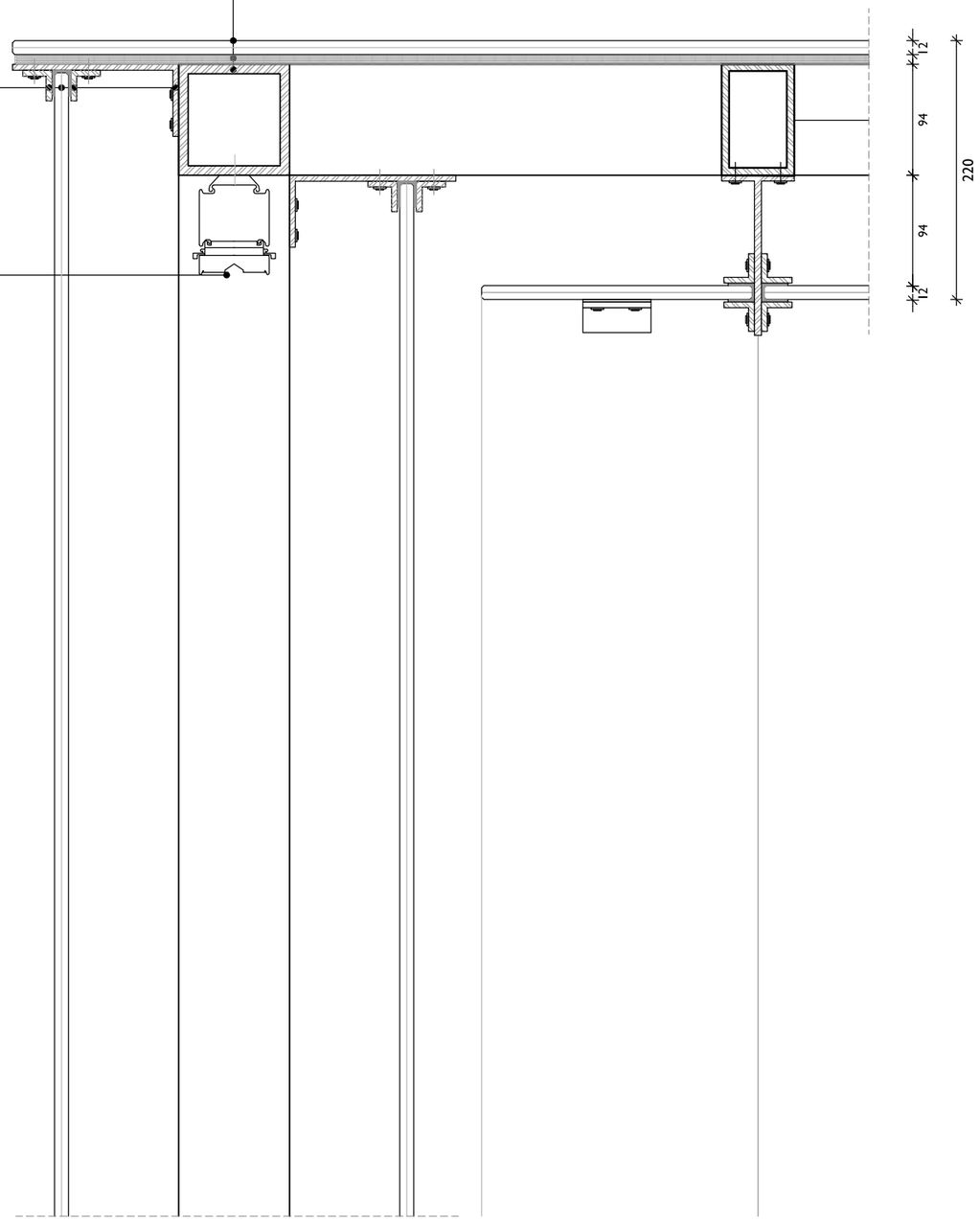

0 50 100 250 500mm

DT-01 schaal 1:5

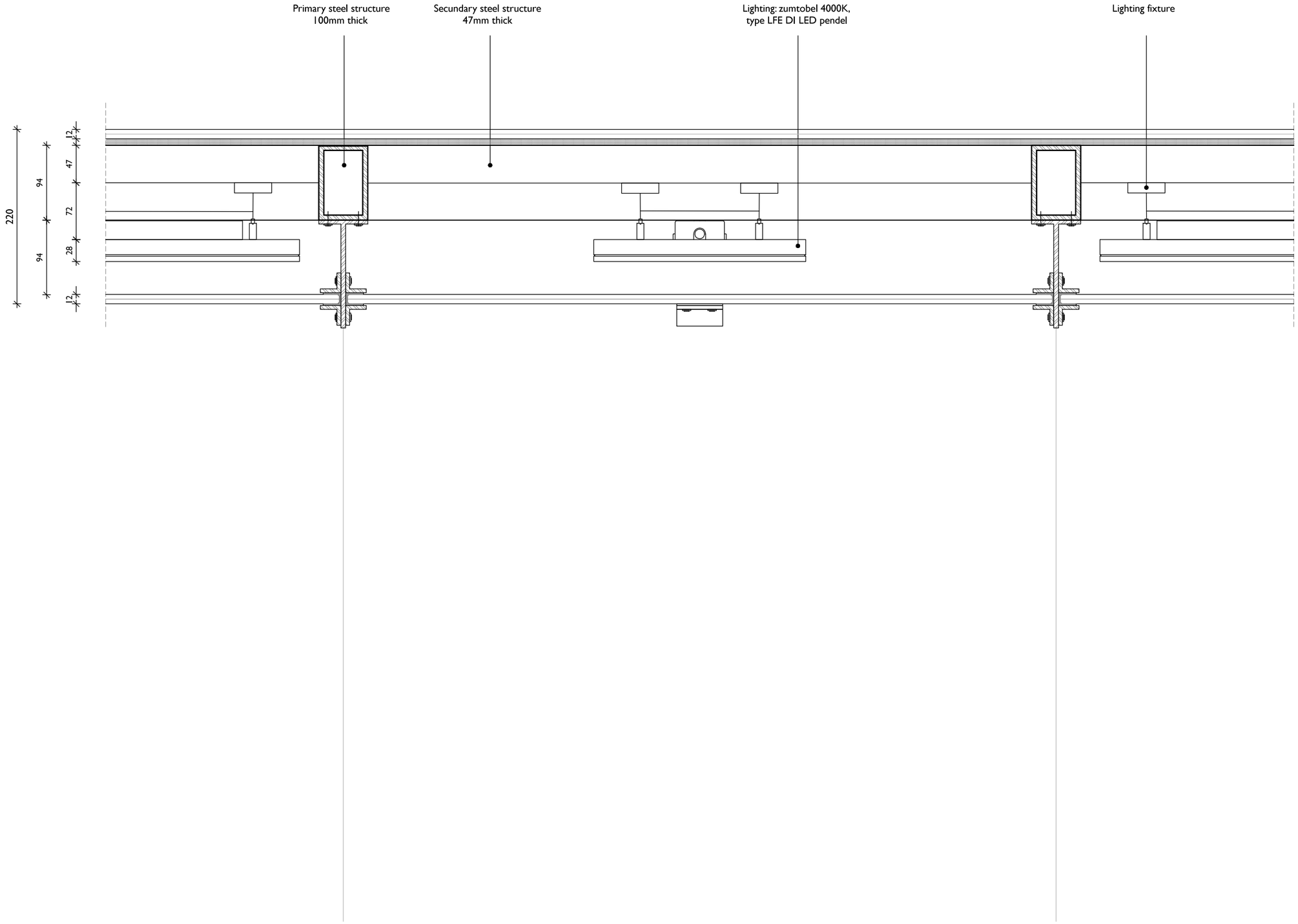

0 50 100 250 500mm

DT-01 schaal 1:5

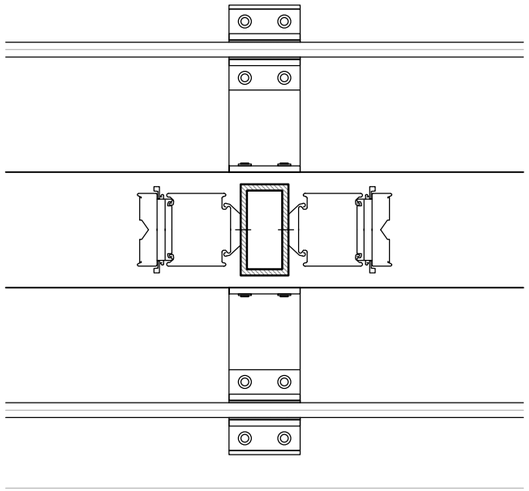

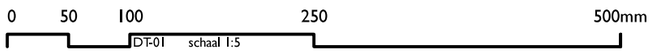
0
50
100
250
500mm
DT-01
schaal 1:5

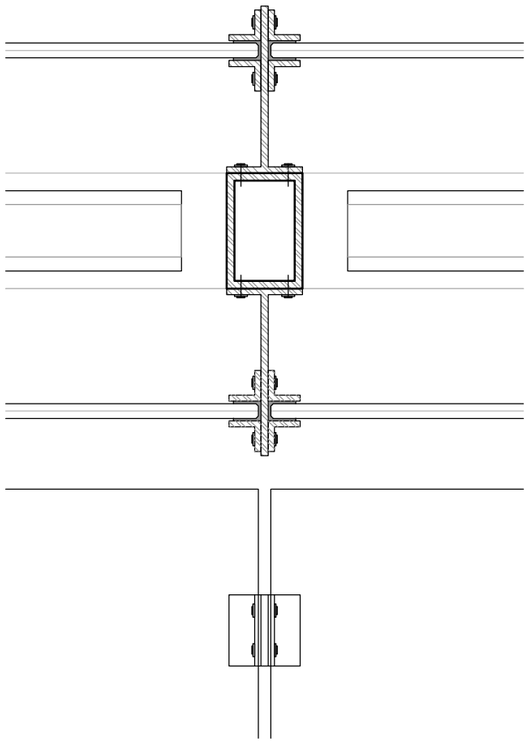

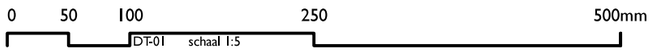
0
50
100
250
500mm
DT-01
schaal 1:5